intertek
Total Quality. Assured.

STOVE BUILDER INTERNATIONAL INC.
TEST REPORT

SCOPE OF WORK
EPA EMISSIONS TESTING/2.5R SERIES (SOLUTION 2.5 ZC II, STRATFORD II, FP10 LAFAYETTE II, FP10 LAFAYETTE IIS, FP12 MUNDO II, HE250R, DESTINATION 2.7, MATRIX 2700, WFP-75 8411, HE275, HE275CF, GREEN MOUNTAIN INSERT 90 8460 AND ST. CLAIR 2500)/ WOOD FUEL ROOM HEATER

REPORT NUMBER
104845527MTL-001R2

TEST DATE(S)
11/02/21 - 11/04/21

ISSUE DATE
11/25/21

REVISED DATE
08/17/22

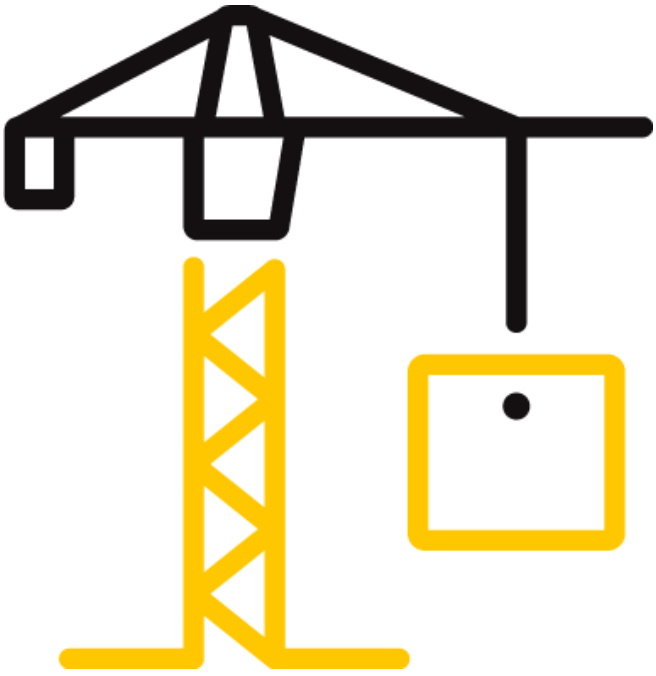

PAGES
33

DOCUMENT CONTROL NUMBER
GFT-OP-10c (05/10/17)
© 2017 INTERTEK

intertek
Total Quality. Assured.

8431 Murphy Drive
Middleton, WI 53562

Telephone: 608-836-4400
Facsimile: 608-831-9279
www.intertek.com/building

TEST REPORT FOR STOVE BUILDER INTERNATIONAL INC.
Report No.: 104845527MTL-001R2
Date: 08/17/22

REPORT ISSUED TO
STOVE BUILDER INTERNATIONAL, INC.
250 de Copenhague
ST-Augustin-de-Desmaures, Qc, G3A 2H3

SECTION 1
SCOPE
Intertek Testing Services NA (Intertek) has conducted testing for Stove Builder International Inc., on model HE250R (2.5R Series) wood burning room heater to evaluate all applicable performance requirements included in "Determination of particulate matter emissions from wood heaters." HE250R is a representative model of the 2.5R Series. This series includes the following models: Solution 2.5 ZC II, Stratford II, FP10 Lafayette II, FP10 Lafayette IIS, FP12 Mundo II, HE250R, Destination 2.7, Matrix 2700, WFP-75 8411, HE275CF, HE275, Green Mountain Insert 90 8460 and St. Clair 2500. See PEV # 104845527MTL-002 for more details.

The test was conducted to determine if the unit is in accordance with U.S EPA requirements under EPA 40 CFR Part 60 "Standards of Performance for New Residential Wood Heaters, New Residential Hydronic Heaters and Forced-Air Furnaces". This evaluation was conducted on November 2 to November 4, 2021. The following test methods were applicable:

- ASTM E2515-11- Standard Test Method for Determination of Particulate Matter Emissions Collected by a Dilution Tunnel

- ASTM E3053-17 - Standard Test Method for Determining Particulate Matter Emissions from Wood Heaters using Cordwood Test Fuel. It is based on the ALT-125 send by EPA on February 28th, 2018.

- CSA B415.1-10 - Performance Testing of Solid-Fuel-Burning Heating Appliances

Testing was performed by the undersigned at client's facility.

This report does not constitute certification of this product nor an opinion or endorsement by this laboratory.

8431 Murphy Drive
Middleton, WI 53562

Telephone: 608-836-4400
Facsimile: 608-831-9279
www.intertek.com/building

TEST REPORT FOR STOVE BUILDER INTERNATIONAL INC.
Report No.: 104845527MTL-001R2
Date: 08/17/22

SECTION 2
SUMMARY OF TEST RESULTS

The appliance tests resulted in the following performance:

Particulate Emissions: 1.2 g/hr
Carbon Monoxide Emissions: 1.6 g/min
Heating Efficiency: 64% (Higher Heating Value Basis)

For INTERTEK B&C:

COMPLETED BY:	Brian Ziegler	**REVIEWED BY:**	Ken Slater
TITLE:	Technical Team Leader - Hearth	**TITLE:**	Associate Engineer - Hearth
SIGNATURE:		**SIGNATURE:**	 Ken Slater
DATE:	08/19/22	**DATE:**	08/19/22

aaa:bbb

This report is for the exclusive use of Intertek's Client and is provided pursuant to the agreement between Intertek and its Client. Intertek's responsibility and liability are limited to the terms and conditions of the agreement. Intertek assumes no liability to any party, other than to the Client in accordance with the agreement, for any loss, expense or damage occasioned by the use of this report. Only the Client is authorized to permit copying or distribution of this report and then only in its entirety. Any use of the Intertek name or one of its marks for the sale or advertisement of the tested material, product or service must first be approved in writing by Intertek. The observations and test results in this report are relevant only to the sample(s) tested. This report by itself does not imply that the material, product, or service is or has ever been under an Intertek certification program.

SECTION 3
TEST METHOD(S)

The specimen was evaluated in accordance with the following:

ASTM E2515-11- Standard Test Method for Determination of Particulate Matter Emissions Collected by a Dilution Tunnel

ASTM E3053-17 - Standard Test Method for Determining Particulate Matter Emissions from Wood Heaters using Cordwood Test Fuel. It is based on the ALT-125 send by EPA on February 28th, 2018.

CSA B415.1-10 - Performance Testing of Solid-Fuel-Burning Heating Appliances

intertek
Total Quality. Assured.

8431 Murphy Drive
Middleton, WI 53562

Telephone: 608-836-4400
Facsimile: 608-831-9279
www.intertek.com/building

SECTION 4
MATERIAL SOURCE

A sample was submitted to Intertek directly from the client. The sample was not independently selected for testing. The test unit was handed to the Intertek representative at client's facility in St-Augustin-de-Desmaures, Quebec. The unit was inspected upon receipt and found to be in good condition. The unit was set up following the manufacturer's instructions without difficulty.

Following assembly, the unit was placed on the test stand. Prior to begin the emissions tests, the manufacturer operated the unit for a minimum of 50 hours at medium burn rates to break-in the stove. The unit was found to be operating satisfactory during this break-in. The 50 plus hours of pre-burning were conducted from September 28 to October 29, 2021. The fuel used for the break-in process was beech cordwood. Table 1 shows the summary of the burn time in each test ran at medium burn rate; raw data is available on *Appendix F – Unit pre-burn documentation*.

Table 1 - Pre-burn time at medium burn rate summary

DATE	BURN CYCLE	DURATION (MIN)	LOAD TYPE (-)	FUEL ADDED (LBS)	MOISTURE (% DB)
2021-09-28	Preload	66	Kindling & SUF	9.95	14.8
	Condition	142	High fire	19.95	20.3
	Load	450	Medium fire	23.17	19.6
2021-10-15	Preload	58	Kindling & SUF	8.16	15.0
	Condition	92	High fire	17.63	19.1
	Load	359	Medium fire	20.47	20.2
2021-10-19	Preload	51	Kindling & SUF	8.69	14.5
	Condition	96	High fire	18.29	20.1
	Load	421	Medium fire	23.35	19.7
2021-10-20	Preload	47	Kindling & SUF	8.77	14.6
	Condition	120	High fire	18.76	19.5
	Load	379	Medium fire	23.28	19.6
2021-10-22	Preload	55	Kindling & SUF	8.56	14.7
	Condition	84	High fire	18.78	19.7
	Load	416	Medium fire	22.90	19.5
2021-10-29	Preload	45	Kindling & SUF	9.40	14.6
	Condition	94	High fire	19.35	19.4
	Load	450	Medium fire	23.95	19.7
	Total	3425	Minutes		
		57.08	Hours		

8431 Murphy Drive
Middleton, WI 53562

Telephone: 608-836-4400
Facsimile: 608-831-9279
www.intertek.com/building

TEST REPORT FOR STOVE BUILDER INTERNATIONAL INC.
Report No.: 104845527MTL-001R2
Date: 08/17/22

Following the pre-burn break-in process the unit was allowed to cool and ash and residue were removed from the firebox. The unit's chimney system and laboratory dilution tunnels were cleaned using standard wire brush chimney cleaning equipment on November 1, 2021. The unit was set-up for testing on the same day.

SECTION 5
EQUIPMENT

EQUIPMENT	INV NUMBER	CALIBRATION DUE	MU
Floor scale	SBI-014	March 09, 2022	± 0.020 kg
DGM system 1	SBI-046	November 30, 2021	±2% F.S.
DGM System 2	SBI-047	April 07, 2022	±2% F.S.
Reference DGM	SBI-103	November 16, 2022	±2% F.S.
5 kg weight	SBI-190	October 02, 2023	±0.2 g
Temperature acquisition	SBI-197	October 21, 2022	±0.5°F
Pitot tube type S	SBI-104	December 03, 2021	±0.22 mps
Analytical scale	SBI-206	March 09, 2022	±0.08 mg
Table scale	SBI-222	March 09, 2022	±0.5 g
100 mg weight	SBI-237	October 09, 2023	±0.0025 mg
10 g weight	SBI-238	October 09, 2023	±0.012 mg
Hot wire anemometer	SBI-241	March 24, 2022	±0.15 m/s
Magnesense (tunnel)	SBI-250	February 25, 2022	±0.00015" H2O
Magnesense (draft)	SBI-248	February 25, 2022	±0.00015" H2O
DGM system 3	SBI-290	April 06, 2022	±2% F.S.
Pressure transmitter	SBI-299	January 22, 2022	±9.5e-003 psi
Pressure transmitter	SBI-300	January 22, 2022	±9.5e-003 psi
Vacuum transmitter	SBI-306	January 22, 2022	±3.1e-003 in.HG
Vacuum transmitter	SBI-309	January 22, 2022	±3.1e-003 in.HG
Relative humidity temperature meter	SBI-212	September 23, 2022	±6.0 e-001%
Relative humidity temperature meter	SBI-213	May 07, 2022	±6.0 e-001%
200 g weight	SBI-312	October 09, 2023	±0.06 mg
Barometer	SBI-331	October 01, 2022	±0.62mb/hPa

8431 Murphy Drive
Middleton, WI 53562

Telephone: 608-836-4400
Facsimile: 608-831-9279
www.intertek.com/building

TEST REPORT FOR STOVE BUILDER INTERNATIONAL INC.
Report No.: 104845527MTL-001R2
Date: 08/17/22

Moisture Content Standard	SBI-153	October 21, 2022	±0.2%
Multimeter	SBI-194	November 24, 2021	±1% Ω
Thermometer Calibrator	SBI-096	June 08, 2022	±0.5°F

SECTION 6
LIST OF OFFICIAL OBSERVERS

NAME	COMPANY
Guillaume Thibodeau-Fortin	Stove Builder International inc.
Claude Pelland, P.E.	Intertek B&C
Hussein Mortada, CPI	Intertek B&C

SECTION 7
TEST PROCEDURE

From November 2 to November 4, 2021, the unit was tested for EPA emissions. For wood stoves, wood insert or wood fireplace the test was conducted in accordance with ASTM E3053-17 and ASTM E2515-11. The fuel used for the test run was beech cordwood.

The applicable EPA regulatory limits are:

Step 2 – 2020 – 2.0 grams per hour with crib, 2.5 grams per hour with cordwood.

MANUFACTURER LOADING PROCEDURE
Fuel Species: Beech
Fuel Length: 16-inches

Stove lighting: 9.6 lbs
Split the start-up fuel log into 10 pieces. Crisscross all pieces on the brick, leaving some space between each wood pieces (2 in the bottom, 4 on the middle, 4 on the top). Crisscross the kindling on the top of the start-up fuel. The kindling is made of between 10-12 finely split piece of wood that are 10% of moisture content. Place crumbled newspaper on top of the kindling (5 full sheets). Light up the paper and let the door ajar at 90° until the flue temperature reaches 150°F, then close the door. The fan is always OFF.

High Fire load: 19 lbs
When there is coal bed of 2.5 lbs left, break ashes and level coal bed, then add high fire load. Place the 2 smallest pieces in the bottom in a reverse V shape, then put the 2 medium size pieces in an East-West orientation in the back (over the reverse V) and put the biggest size remaining pieces in the front. Leave one inch or air space between the rear bricks and the medium piece, the

distance between the two medium pieces and the medium and big pieces will be adjusted to respect maximum loading volume. Fully open the door for 1 to 2.5 minutes. Flue temperature shall be around 575°F ± 50. Close the door and let burn until the weight is down to target. Start the fan at 5 minutes after loading. Stop the sampling when 90% of the test fuel is consumed.

Low preparation after high
When the average stove temperature gets to 460°F, slightly level the coal bed. Let the door ajar by one inch for one minute. There should be approximately 4.2 lb of coal bed.

Low Fire Loading: 23.5 lbs
Place the 2 smallest pieces in the bottom in a reverse V shape, then put the 2 medium size pieces in an East-West orientation in the back (over the reverse V). Then put the biggest piece over the reverse V shape in the front in an East-West orientation and put the remaining medium size piece over the 2 mediums pieces in the back. Leave one inch or air space between the rear bricks and the medium piece, another one inch between all the pieces. Let the door ajar until the flue temperature reaches 900°F and then close the door with the primary air control open. When the flue temperature stops decreasing and starts increasing again and the oxygen falls below 9%, close the primary air control using a ½" outside diameter rod. Close the primary air control completely when 15% of the load weight has been consumed (approx. 10-11 minutes). Start the fan at 30 minutes from the beginning of sampling.

Medium preparation after high
When the average stove temperature gets to 440°F, slightly level the coal bed. Let the door ajar by one inch for one minute. There should be approximately 4.0 lb of coal bed.

Loading: 23.5 lbs
Place the 2 smallest pieces in the bottom in a reverse V shape, then put the 2 medium size pieces in an East-West orientation in the back (over the reverse V). Then put the biggest piece over the reverse V shape in the front in an East-West orientation and put the remaining medium size piece over the 2 mediums pieces in the back. Leave one inch or air space between the rear bricks and the medium piece, another one inch between all the pieces. Let the door ajar until the flue temperature reaches 900°F and then close the door with the primary air control open. When the flue temperature stops decreasing and starts increasing again and the oxygen falls below 9%, close the primary air control using a ½" outside diameter rod. Close the primary air control on a rod of 3/8" of outside diameter when 15% of the load weight has been consumed (approx. 10-11 minutes). Remove the rod. Start the fan at 30 minutes from beginning of sampling.

intertek
Total Quality. Assured.

8431 Murphy Drive
Middleton, WI 53562

Telephone: 608-836-4400
Facsimile: 608-831-9279
www.intertek.com/building

TEST SET-UP DESCRIPTON

A 6" flue is connected to a standard 6" diameter vertical single wall pipe and insulated chimney system was installed to 15' above floor level. The single wall pipe extended to 8 feet above the floor and insulated chimney extended the remaining height. Single wall pipe was used because some models are insert wood heaters.

AIR SUPPLY SYSTEM

Combustion air enters at the bottom of the heater, which is directed to the firebox. All gases exit through the 6" flue located on top of the heater.

TEST FUEL PROPERTIES

The species of fuel used was beech. The fuel was split cordwood of nominal length of 16 inches ± 1 inch. The fuel was dried in air to an average moisture content between 18% and 28% on a dry basis. Cordwood fuel was loaded per manufacturer's instructions.

SAMPLING LOCATIONS

Particulate samples are collected from the dilution tunnel at point 20 feet from the tunnel entrance. The collection hood is 40 inches in diameter. The mixing section started with a 10-inch diameter elbow, followed by a strait 10-inch diameter section. A 10 to 8-inch diameter reducer is installed upstream of the 8-inch diameter elbow (see Figure 1). The sampling section is a continuous 13-foot section of 8-inch diameter pipe straight over its entire length. Tunnel velocity pressure is determined by a type "S" Pitot tube located 100 inches from the beginning of the sampling section. The dry bulb thermocouple is located on the pitot tube. Tunnel samplers are located 48 inches downstream of the Pitot tube and 36 inches upstream from the end of this section (See Figure 2).

The dilution tunnel is fully compliant with ASTM E2515-11.

Stack gas samples are collected from the steel chimney section 8 feet ± 6 inches above the scale platform.

8431 Murphy Drive
Middleton, WI 53562

Telephone: 608-836-4400
Facsimile: 608-831-9279
www.intertek.com/building

TEST REPORT FOR STOVE BUILDER INTERNATIONAL INC.
Report No.: 104845527MTL-001R2
Date: 08/17/22

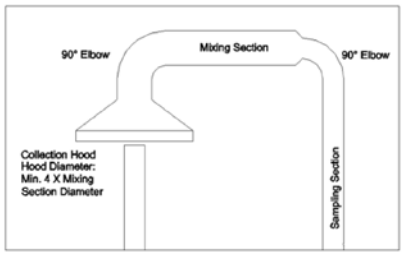

Figure 1 - Mixing Section with different diameter

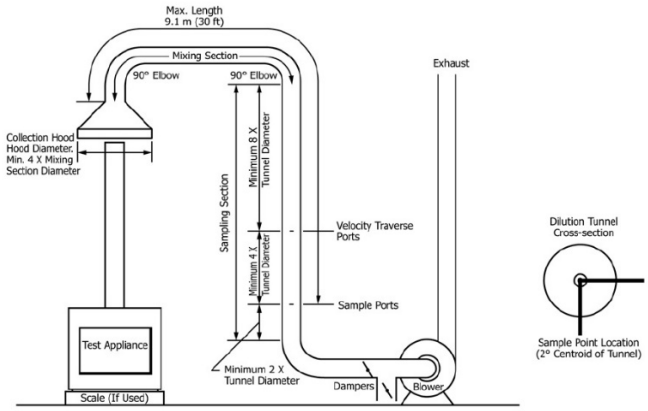

Figure 2 - Dilution tunnel

SAMPLING METHODS

PARTICULATE SAMPLING

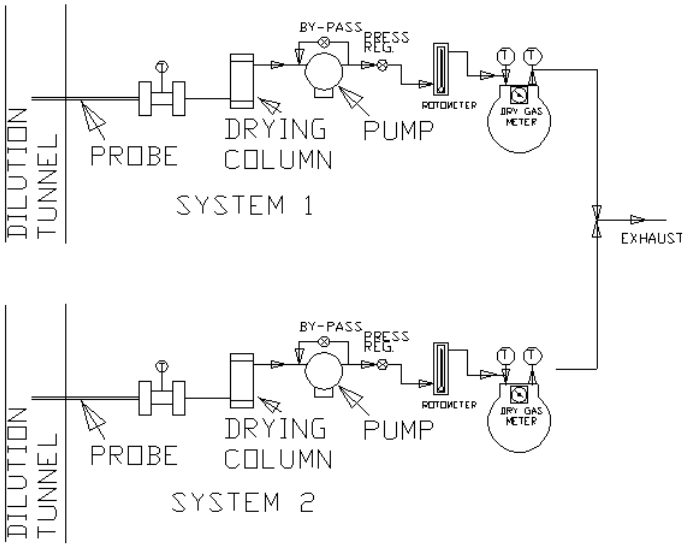

Figure 3 - Stack gas sample train

Particulates were sampled in strict accordance with ASTM E2515-2011. Schematic is presented on Figure 3. This method uses three identical sampling systems with PALL TX-40 47-mm diameter filters. The dryers used in the sample systems are filled with “Drierite” before each test run. In order to measure first-hour emissions rates, a third filter set is installed between the two others. The third filter set is stopped individually after 60 minutes of sampling.

8431 Murphy Drive
Middleton, WI 53562

Telephone: 608-836-4400
Facsimile: 608-831-9279
www.intertek.com/building

At the conclusion of each test program the dry gas meters are checked against our standard dry gas meter. Three runs are made on each dry gas meter used during the test program. The average calibration factors obtained are then compared with the six-month calibration factor and, if within 5%, the six-month factor is used to calculate standard volumes. Results of this calibration are contained in Appendix E.

An integral part of the post-test calibration procedure is a leak check of the pressure side by plugging the system exhaust and pressurizing the system to 10" W.C. The system is judged to be leak free if it retains the pressure for at least 10 minutes.

The standard dry gas meter is calibrated every 6 months using a Spirometer designed by the EPA Emissions Measurement Branch. The process involves sampling the train operation for 1 cubic foot of volume. With readings made to .001 ft^3, the resolution is .1%, giving an accuracy higher than the ±2% required by the standard.

STACK SAMPLE ROTAMETER

The stack sample rotameter is checked by running three tests at each flow rate used during the test program. The flow rate is checked by running the rotameter in series with one of the dry gas meters for 10 minutes with the rotameter at a constant setting. The dry gas meter volume measured is then corrected to standard temperature and pressure conditions. The flow rate determined is then used to calculate actual sampled volumes.

GAS ANALYZERS

The continuous analyzers are zeroed and spanned before each test with appropriate gases. A mid-scale multi-component calibration gas is then analyzed (values are recorded). At the conclusion of a test, the instruments are checked again with zero, span and calibration gases (values are recorded only). The drift in each meter is then calculated and must not exceed 5% of the scale used for the test.

At the conclusion of each unit test program, a three-point calibration check is made. This calibration check must meet accuracy requirements of the applicable standards. Consistent deviations between analyser readings and calibration gas concentrations are used to correct data before computer processing. Data is also corrected for interferences as prescribed by the instrument manufacturer's instructions.

TEST METHOD PROCEDURES

LEAK CHECK PROCEDURES

Before and after each test, each sample train is tested for leaks. Leakage rates are measured and must not exceed 0.02 CFM or 4% of the sampling rate. Leak checks are performed checking the

8431 Murphy Drive
Middleton, WI 53562

Telephone: 608-836-4400
Facsimile: 608-831-9279
www.intertek.com/building

entire sampling train, not just the dry gas meters. Pre-test and post-test leak checks are conducted with a vacuum of 5 inches of mercury. Vacuum is monitored during each test and the highest vacuum reached is then used for the post-test vacuum value. If leakage limits are not met, the test run is rejected. During, these tests the vacuum was typically less than 1 inches of mercury. Thus, leakage rates reported are expected to be much higher than actual leakage during the tests.

TUNNEL VELOCITY/FLOW MEASUREMENT

The tunnel velocity is calculated from a center point Pitot tube signal multiplied by an adjustment factor. This factor is determined by a traverse of the tunnel as prescribed in EPA Method 1. Final tunnel velocities and flow rates are calculated from EPA Method 2, Equation 6.9 and 6.10. (Tunnel cross sectional area is the average from both lines of traverse.)

Pitot tubes are cleaned before each test and leak checks are conducted after each test.

PM SAMPLING PROPORTIONALITY

Proportionality was calculated in accordance with ASTM E2515-11. The data and results are included in Appendix B.

DEVIATIONS FROM STANDARD METHOD:

The following deviations were requested by EPA on ALT-125:

Changes to ASTM E3053-17 are:

1. Coal bed conditions prior to loading test fuel: The coal bed should be a level plane without valleys or ridges for all test runs in the high fire, low and medium burn rate categories.

Changes to ASTM E2515-11 must be as followed:

1. The filter temperature must be maintained between 80 and 90 Degrees F during testing.
2. Filters must be weighed in pairs to reduce weighing error propagation.
3. Sample filters must be Pall TX-40 or equivalent Teflon coated glass fiber, and of 47 mm,90mm, 100mm of 110mm in diameter.
4. Only one point is allowed outside the +/- 10% proportionality range per test run.

8431 Murphy Drive
Middleton, WI 53562

Telephone: 608-836-4400
Facsimile: 608-831-9279
www.intertek.com/building

TEST REPORT FOR STOVE BUILDER INTERNATIONAL INC.
Report No.: 104845527MTL-001R2
Date: 08/17/22

SECTION 8
TEST CALCULATIONS

Weight of test fuel load, dry basis ASTM E3053

$$M_{Fldb} = \Sigma((M_{FLnwb})(100)/(100+MC_{FLn}))$$

where:

M_{FLdb} = weight of test fuel load, dry basis, lb (kg);
M_{FLnwb} = weight of each test fuel piece, *n*, in test fuel load per 8.4.1, wet basis, lb (kg);
MC_{FLn} = average fuel moisture of test fuel piece, *n*, in test fuel load, % dry basis; and
n = individual test fuel pieces that comprise the test fuel load, as applicable.

Weighted Average Determination ASTM E3053

$$Vi_{WA} = 0.4(Vi_{LAve)}) + 0.4(Vi_{MAve}) + 0.2(Vi_{HAve})$$

where:

Vi_{WA} = Weighted average for variable *i*;
Vi = Test result variable (Particulate Matter: g/h, g/kg, lb/MMBtu; % Overall Efficiency: HHV, LHV; Carbon Monoxide: g/h, etc.)
Vi_{LAve} = Arithmetic average for variable *Vi* for all test runs (except per 8.6.13 or 8.9) that are included in the low fire burn rate category
Vi_{MAve} = Arithmetic average for variable *Vi* for all test runs (except per 8.6.13 or 8.9) that are included in the medium fire burn rate category;
Vi_{HAve} = Arithmetic average for variable *Vi* for all test runs (except per 8.9) that are included in the high fire burn rate category.

NOMENCLATURE FOR ASTM E2515:

A = Cross-sectional area of tunnel m2 (ft2).
B_{ws} = Water vapor in the gas stream, proportion by volume (assumed to be 0.02 (2.0 %)).
C_p = Pitot tube coefficient, dimensionless (assigned a value of 0.99).
c_r = Concentration of particulate matter room air, dry basis, corrected to standard conditions, g/dscm (gr/ dscf) (mg/dscf).
c_s standard = Concentration of particulate matter in tunnel gas, dry basis, corrected to conditions, g/dscm (gr/dscf) (mg/dscf).
E_T = Total particulate emissions, g.
F_p = Adjustment factor for center of tunnel pitot tube placement.

8431 Murphy Drive
Middleton, WI 53562

Telephone: 608-836-4400
Facsimile: 608-831-9279
www.intertek.com/building

TEST REPORT FOR STOVE BUILDER INTERNATIONAL INC.
Report No.: 104845527MTL-001R2
Date: 08/17/22

$F_p = V_{strav}/V_{scent}$

K_P = Pitot Tube Constant, 34.97 $\frac{m}{\sec}\left[\frac{\left(\frac{g}{g}\blacksquare mole\right)(mm\ Hg)}{(K)(mm\ water)}\right]^{\frac{1}{2}}$

or

= Pitot Tube Constant, 85.49 $\frac{ft}{\sec}\left[\frac{\left(\frac{lb}{lb}-mole\right)(in\ Hg)}{(R)(in\ water)}\right]^{\frac{1}{2}}$

L_a = Maximum acceptable leakage rate for either a pretest or post-test leak- check, equal to 0.0003 m3/min (0.010 cfm) or 4 % of the average sampling rate, whichever is less.

L_p = Leakage rate observed during the post-test leak-check, m3/min (cfm).

m_p = mass of particulate from probe, mg.

m_f = mass of particulate from filters, mg.

m_g = mass of particulate from filter gaskets, mg.

m_r = mass of particulate from the filter, filter gasket, and probe assembly from the room air blank filter holder assembly, mg.

m_n = Total amount of particulate matter collected, mg.

M_s = the dilution tunnel dry gas molecular weight (may be assumed to be 29 g/g mole (lb/lb mole).

P_{bar} = Barometric pressure at the sampling site, mm Hg (in. Hg).

P_g = Static Pressure in the tunnel (in. water).

P_R = Percent of proportional sampling rate.

P_s = Absolute average gas static pressure in dilution tunnel, mm Hg (in. Hg).

P_{std} = Standard absolute pressure, 760 mm Hg (29.92 in. Hg).

Q_{std} = Average gas flow rate in dilution tunnel.

$$Q_{std} = 60\ (1 - B_{ws})\ V_s\ A\ [T_{std}\ P_s/T_s\ P_{std}]$$

dscm/min (dscf/min).

T_m = Absolute average dry gas meter temperature, K (R).

T_{mi} = Absolute average dry gas meter temperature during each 10-min interval, *i*, of the test run.

$$T_{mi} = (T_{mi(b)} + T_{mi(e)})/2$$

where:

$T_{mi(b)}$ = Absolute dry gas meter temperature at the beginning of each 10-min test interval, i, of the test run, K (R), and

$T_{mi(e)}$ = Absolute dry gas meter temperature at the end of each 10-min test interval, i, of the test run, K (R).

Ts = Absolute average gas temperature in the dilution tunnel, K (R).

Tsi = Absolute average gas temperature in the dilution tunnel during each 10-min interval, i, of the test run, K (R).

$$T_{si} = (T_{si(b)} + T_{m=si(e)})/2$$

where:

$T_{si(b)}$ = Absolute gas temperature in the dilution tunnel at the beginning of each 10-min test interval, i, of the test run, K (R), and

8431 Murphy Drive
Middleton, WI 53562

Telephone: 608-836-4400
Facsimile: 608-831-9279
www.intertek.com/building

$T_{si(e)}$ = Absolute gas temperature in the dilution tunnel at the end of each 10-min test interval, i, of the test run, K (R).

V_m = Volume of gas sample as measured by dry gas meter, dcm (dcf).

V_{mc} = Volume of gas sampled corrected for the post test leak rate, dcm (dcf).

V_{mi} = Volume of gas sample as measured by dry gas meter during each 10-min interval, i, of the test run, dcm.

$V_{m(std)}$ = Volume of gas sample measured by the dry gas meter, corrected to standard conditions.

$$V_{m(std)} = K_1 V_m Y [(P_{bar} + (\Delta H/13.6))/T_m]$$

where:

K_1 = 0.3855 K/mm Hg for SI units and = 17.64 R/in. Hg for inch-pound units.

$$V_{m(std)} = K_1 V_{mc} Y [(P_{bar} + (\Delta H/13.6))/T_m]$$

where:

V_{mc} = Vm– (Lp– La)u

V_{mr} = Volume of room air sample as measured by dry gas meter, dcm (dcf), and

$V_{mr(std)}$ = Volume of room air sample measured by the dry gas meter, corrected to standard conditions.

$$V_{m(std)} = K_1 V_{mr} Y [(P_{bar} + (\Delta H/13.6))/T_m]$$

Where:

K_1 = 0.3855 K/mm Hg for SI units and = 17.64 R/in. Hg for inch-pound units, and

V_s = Average gas velocity in the dilution tunnel.

$$V_s = F_p K_p C_p (\sqrt{\Delta P_{avg}})(\sqrt{(T_s/P_s M_s)})$$

V_{si} = Average gas velocity in dilution tunnel during each 10-min interval, i, of the test run.

$$V_{si} = F_p K_p C_p (\sqrt{\Delta P_i})(\sqrt{(T_{si}/P_s M_s)})$$

V_{scent} = Average gas velocity at the center of the dilution tunnel calculated after the Pitot tube traverse.

V_{strav} = Average gas velocity calculated after the multipoint Pitot traverse.

Y = Dry gas meter calibration factor.

ΔH = Average pressure at the outlet of the dry gas meter or the average differential pressure across the orifice meter, if used, mm water (in. water).

ΔP_{avg} = Average velocity pressure in the dilution tunnel, mm water (in. water).

ΔP_i = Velocity pressure in the dilution tunnel as measured with the Pitot tube during each 10-min interval, i, of the test run.

$$\Delta P_i = (\Delta P_{i(b)} + \Delta P_{i(e)})/2$$

where:

$\Delta P_{i(b)}$ = Velocity pressure in the dilution tunnel as measured with the Pitot tube at the beginning of each 10-min interval, i, of the test run, mm water (in. water), and

$\Delta P_{i(e)}$ = Velocity pressure in the dilution tunnel as measured with the Pitot tube at the end of each 10-min interval, i, of the test run, mm water (in. water).

θ = Total sampling time, min.

10 = ten min, length of first sampling period.

13.6 = Specific gravity of mercury.

8431 Murphy Drive
Middleton, WI 53562

Telephone: 608-836-4400
Facsimile: 608-831-9279
www.intertek.com/building

100 = Conversion to percent.

TOTAL PARTICULATE WEIGHT – ASTM E2515

$M_n = m_p + m_f + m_g$

PARTICULATE CONCENTRATION – ASTM E2515

$C_s = K_2(m_n/V_{m(std)})$ g/dscm (g/dscf)

where:

K_2 = 0.001 g/mg

TOTAL PARTICULATE EMISSIONS (g) – ASTM E2515

$E_T = (C_s – C_r)Q_{std}\theta$

PROPORTIONAL RATE VARIATION (%) – ASTM E2515

$PR = [\theta(V_{mi}\ V_s\ T_m\ T_{si})/(10(V_m\ V_{si}\ T_s\ T_{mi})] \times 100$

MEASUREMENT OF UNCERTAINTY – ASTM E2515

$MU_{weighing} = \sqrt{0.1^2} \bullet X$

GENERAL FORMULA – ASTM E2515

$uY = \sqrt{((\delta Y/\delta x_1) \times u_1)^2 + \ldots + ((\delta Y/\delta x_n) \times u_n)^2}$

Where:

$\delta Y/\delta x_i$ = Partial derivative of the combining formula with respect to individual measurement xi,

u_i = is the uncertainty associated with that measurement.

TOTAL PARTICULATE EMISSIONS – ASTM E2515

$E_T = (c_s – c_r)\ Q_{std}\ \theta$

where:

c_s = sample filter catch/(sample flow rate x test duration), g/dscf,

c_r = room background filter catch/(sample flow x sampling time), g/dscf,

Q_{std} = average dilution tunnel flow rate, dscf/min, and

θ = sampling time, minutes.

MU OF c_s

$c_s = F_c/(Q_{sample} \times \theta) = 0.025/(0.25 \times 180) = 0.0005555$

$\delta c_s/\delta F_c = 1/Q_{sample} \bullet \Theta = 1/0.25 \bullet 180 = 0.0222$

$\delta c_s/\delta Q_{sample} = -F_c/Q^2_{sample} \bullet \Theta = -0.025/0.25^2 \bullet 180 = -0.00222$

$\delta c_s/\delta\Theta = -F_c/Q_{sample} \bullet \Theta^2 = -0.025/0.25 \bullet 180^2 = -0.000003$

$MUc_s = \sqrt{(0.00027 \bullet 0.0222)^2 + (0.0025 \bullet - 0.00222)^2}$

8431 Murphy Drive
Middleton, WI 53562

Telephone: 608-836-4400
Facsimile: 608-831-9279
www.intertek.com/building

$\sqrt{} + (0.1 \bullet - 0.000003)^2 = 0.0000091g$

Thus, c_s would be 0.555 mg/dscf ± 0.0081 mg/dscf at 95% confidence level.

MU OF c_r

$c_r = BG_c/(QBG \times \theta) = 0.002/(0.15 \times 180) = 0.000074$
$\delta c_r/\delta BG_c = 1/Q_{BG} \bullet \Theta = 1/0.15 \bullet 180 = 0.03704$
$\delta c_r/\delta Q_{BG} = -BG_c/Q^2_{BG} \bullet \Theta = -0.002/0.15^2 \bullet 180 = -0.0004938$
$\delta c_r/\delta \Theta = -BG_c/Q_{BG} \bullet \Theta^2 = -0.002/0.15 \bullet 180^2 = -0.0000004$
$MUc_r = \sqrt{}(0.00027 \bullet 0.03704)^2 + (0.0015 \bullet - 0.0004938)^2$
$\sqrt{} + (0.1 \bullet - 0.0000004)^2 = 0.00001g$
Thus, c_r would be 0.074 mg/dscf ± 0.01 mg/dscf at 95% confidence level.

E_T AND MU_{ET}

$E_T = (c_s - c_r)\ Q_{sd}\ \theta = (0.000555 - 0.000074) \times 150 \times 180 = 13.00g$
$\delta E_T/\delta c_s = Q_{std} \bullet \Theta = 150 \bullet 180 = 27{,}000$
$\delta E_T/\delta c_r = Q_{std} \bullet \Theta = 150 \bullet 180 = 27{,}000$
$\delta E_T/\delta Q_{std} = c_s \bullet \Theta - c_r \bullet \Theta = 0.000555 \bullet 180 - 0.000074 \bullet 180 = 0.08667$
$\delta E_T/\delta \Theta = c_s \bullet Q_{std} - c_r \bullet Q_{std} = 0.000555 \bullet 180 - 0.000074 \bullet 180 = 0.07222$
$MU_{ET} = \sqrt{}(27{,}000 \bullet 0.0000081)^2 + (27{,}000 \bullet 0.00001)^2\ (0.08667 \bullet 3)^2$
$\sqrt{} + (0.07222 \bullet 0.1)^2 = 0.436$

Thus the result in this example would be:
ET = 13.00g ± 0.44 g at a 95% confidence level.

EFFICIENCY – CSA B415.1

The change in enthalpy of the circulating air shall be calculated using the moisture content and temperature rise of the circulating air, as follows:

$$\Delta h = \Delta t\ (1.006 + 1.84x)$$

Where:
Δh = change in enthalpy, kJ/kg
Δt = temperature rise, °C
1.006 = specific heat of air, kJ/kg °C
1.84 = specific heat of water vapor, kJ/kg °C
x = humidity ratio, kg/kg

The equivalent duct diameter shall be calculated as follows:

$$ED = 2HW/H+W$$

8431 Murphy Drive
Middleton, WI 53562

Telephone: 608-836-4400
Facsimile: 608-831-9279
www.intertek.com/building

Where:
ED = equivalent duct diameter
H = duct height, m
W = duct width, m

The air flow velocity shall be calculated as follows:

$$V = F_p \times C_p \times 34.97 \times \sqrt{T/28.56(P_{baro} + P_s)}$$

where
V = velocity, m/s
F_P = Pitot tube calibration factor determined from vane anemometer measurements
C_P = Pitot factor
= 0.99 for a standard Pitot tube or as determined by calibration for a Type S Pitot tube
34.97 = Pitot tube constant
Note: The Pitot tube constant is determined on the basis of the following units: m/s $[g/g\ mole\ (mm\ Hg)/(K)(mm\ H_2O)]^{0.5}$
ΔP = velocity pressure, mm H2O
T = temperature, K
28.56 = molecular weight of air
P_{Baro} = barometric pressure, mm Hg
P_s = duct static pressure, mm Hg

The mass flow rate shall be calculated as follows:

$$m = 3600VAp$$

where:
m = mass flow rate, kg/h
V = air flow velocity, m/s
3600 = number of seconds per hour
A = duct cross-sectional area, m2
p = density of air at standard temperature and pressure (use 1.204 kg/m3)

The rate of heat release into the circulating air shall be calculated using the air flow and change in enthalpy, as follows:

$$\Delta e = \Delta h \times m$$

Where:
Δe = rate of heat release into the circulating air, kJ/h
Δh = change in enthalpy of the circulating air, kJ/kg
m = mass air flow rate, kg/h

8431 Murphy Drive
Middleton, WI 53562

Telephone: 608-836-4400
Facsimile: 608-831-9279
www.intertek.com/building

The heat output over any time interval shall be calculated as the sum of the heat released over each measurement time interval, as follows:

$$E_t = \sum(\Delta e \times i) \text{ for } i = t_1 \text{ to } t_2$$

Where:

Et = delivered heat output over any time interval $t_2 - t_1$, kJ
i = time interval for each measurement, h

The average heat output rate over any time interval shall be calculated as follows:

$$e_t = E_t / t$$

where

e_t = average heat output, kJ/h
t = time interval over which the average output is desired, h

The total heat output during the burn shall be calculated as the sum of all the heat outputs over each time interval, as follows:

$$E_d = \sum(E_t) \text{ for } t = t_0 \text{ to } t_{final}$$

Where:

E_d = heat output over a burn, kJ/h (Btu/h)
E_t = heat output during each time interval, kJ/h (Btu/h)

The efficiency shall be calculated as the total heat output divided by the total energy input, expressed as a percentage as follows:

$$\text{Efficiency, \%} = 100 \times E_d / I$$

Where:

E_d = total heat output of the appliance over the test period, kJ/kg
I = input energy (fuel calorific value as-fired times weight of fuel charge), kJ/kg (Btu/lb)

SECTION 9
TEST SPECIMEN DESCRIPTION

The models from the 2.5R Series wood fuel room heater are constructed of sheet steel. The outer dimensions are 21 7/8-inches deep from the face plate to the rear, 37 3/16-inches high, and 34 5/16-inches wide in the front. The units have a door located on the front with a viewing glass.

FIREBOX VOLUME CALCULATION

The models from the 2.5R Series have a usable firebox volume (UFV) of 1.94 cubic foot. Schematic of the firebox dimensions is presented on Figure 4. Please note that the fuel cannot be stacked any higher due to the secondary air tubes being at the top of the combustion chamber.

8431 Murphy Drive
Middleton, WI 53562

Telephone: 608-836-4400
Facsimile: 608-831-9279
www.intertek.com/building

TEST REPORT FOR STOVE BUILDER INTERNATIONAL INC.
Report No.: 104845527MTL-001R2
Date: 08/17/22

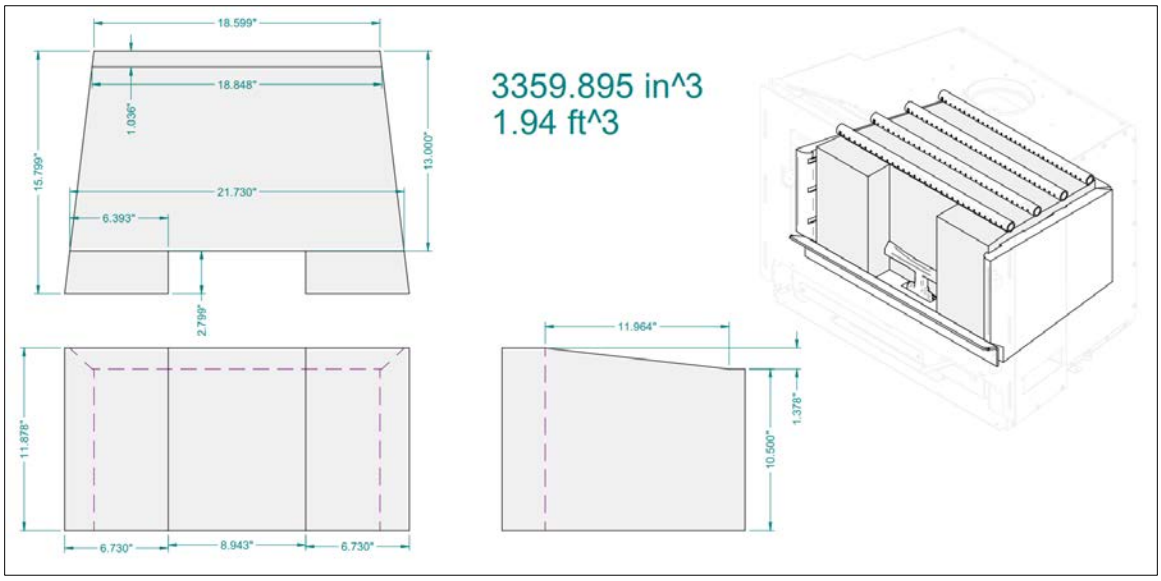

Figure 4 - Schematic useable of firebox volume

Firebox volume calculation is presented below:

$$UFV = V1_{rr} + V2_{mid} + 2 \times V3_{fr}$$

$$V1_{rr} = \frac{(18.599 + 18.848)}{2} \times 10.5 \times 1.036 = 203.67\ in^3$$

$$V2_{mid} = \frac{(18.848 + 21.730)}{2} \times \frac{(10.5 \times 11.878)}{2} \times 11.964 = 2715.99\ in^3$$

$$V3_{fr} = \frac{(6.730 + 6.393)}{2} \times 2.799 \times 11.878 = 218.15\ in^3\ approx.$$

$$UFV = 203.67 + 2715.99 + 2 \times 218.15 = 3355.96\ in^3$$

$$UFV = \frac{3355.96}{12^3} = 1.94\ ft^3$$

In their user's manual, SBI presents another volume called the "Overall Firebox Volume". This volume is for marketing purposes only. The overall firebox calculation is not intended to be used for testing, as it includes areas of the firebox that the test fuel load is not permitted to be placed into. This area is a buffer zone to allow an easier fuel insertion, to prevent ash spillage and to allow the air wash to work properly. The calculation presents an approximation of the volume a consumer could easily confirm using a measuring tape.

8431 Murphy Drive
Middleton, WI 53562

Telephone: 608-836-4400
Facsimile: 608-831-9279
www.intertek.com/building

TEST REPORT FOR STOVE BUILDER INTERNATIONAL INC.
Report No.: 104845527MTL-001R2
Date: 08/17/22

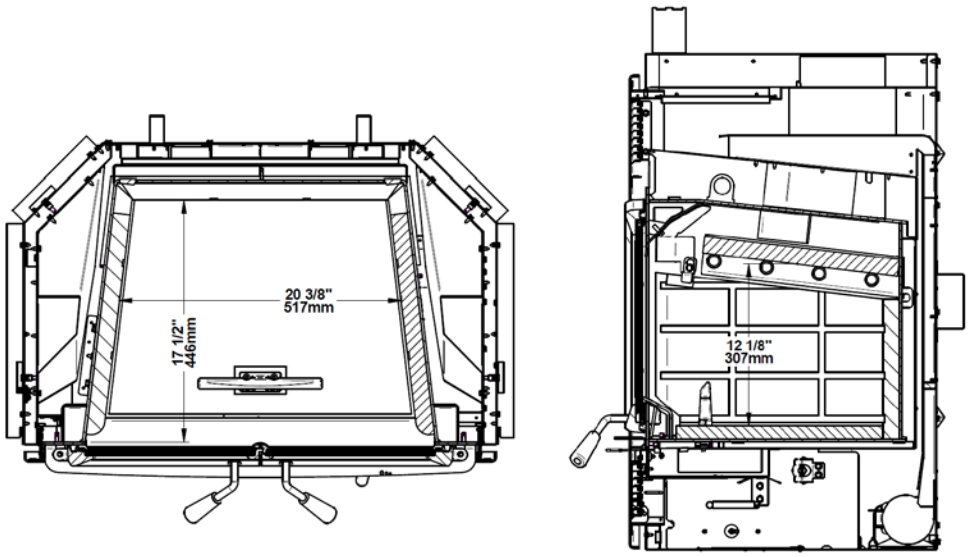

Figure 5 - Schematic of overall firebox volume

The calculation for the overall firebox volume would be the following: middle width x middle height x full depth. This model has a tapered firebox, which is not included in the calculation.

$$20.375 \times 12.125 \times 17.5 = 4323.32\ in^2$$

$$\frac{4323.32}{12^3} = 2.5\ ft^3$$

SECTION 10

TEST RESULTS

GENERAL DISCUSSION:

Except for run 1-Low, all other runs have been found appropriate and they have been validated and found compliant. Run 1-Low was set to burn as a low burn rate (primary air control completely closed) but did not meet the requirement of 1.15 kg/h for burn time shorter than 8h. Except for the compliance to the low burn rate category, the test was appropriate and validated and kept for the weighted average calculation as a low burn rate. A second low burn rate test was performed to prove the compliance with the standard. All burn rate categories were achieved, and all data were used in the calculation of the weighted average.

An anomaly occurred on test run 2-High. The sampling system (system 1 and 2) stopped by itself after a 20-minute period. The sampling system was restarted quickly, approximately 1 minute after. The sampling flow rate was adjusted to meet the proportionality requirement. The proportionality ratio ended compliant with the standard. The loss of sampling was not considered

8431 Murphy Drive
Middleton, WI 53562

Telephone: 608-836-4400
Facsimile: 608-831-9279
www.intertek.com/building

significant since proportionality was maintained. Test run 2-High was considered compliant. Please note than third system (first-hour) was not affected by this interruption because it runs on an independent system.

Except for the 2 first pieces positioned in an angled North-South orientation because of the obstruction caused by a permanent cast-iron part, all other test fuel pieces have been positioned in an East-West orientation as per the manufacturer's written instructions. All test fuel pieces were split to meet individual and total load weight range for the firebox. Test fuel pieces were split in order to preserve the bark. In the area without bark, splitting was done to represent the random shape of the wood as it can be found in a standard cord of wood. No test fuel pieces were voluntary squared.

Filters were not altered by the gasket in all runs. No negative weight was found on probes or filters. No attempt was made to collect ambient background particulate matter during the testing. The contribution of room air particulate matter could not be subtracted from dilution tunnel particulate matter; thus, considered zero. This results in a sample that is potentially biased high when the compliance determination is made.

DESCRIPTION OF TEST RUNS:

RUN #1-High (November 2, 2021) – Air control was set fully opened; total burn time was 133 minutes with a category High burn rate 4.73 kg/hr. Burn time without the cold start was 81 minutes. Kindling and start-up fuel were ignited together in a cold chamber (average surface temperature was 72.9°F and ambient temperature was 70.2°F). Kindling was adjusted after 51 minutes from ignition. High fire load time was 1 min. The door was left open for 1 min after the loading time, then closed. The air control was always fully opened. The fan was started at full speed at 3 minutes after loading. The test run ended when 90 % ± 1% of the test full load was consumed.

RUN #1-Low (November 2, 2021) – Air control set to reach the minimum achievable burn rate (fully closed), burn time was 440 minutes with a burn rate of 1.20 kg/hr. Maximum burn rate at low fire is 1.15 kg/h for test shorter than 8 hours, so the test is not a valid "low burn rate category". Load time was 1 min. The door was left open for 3 min after the loading time, then closed. 5 min after loading time, the air control was closed on a ½-inch rod as spacer. The air control was set to fully closed position 9 minutes after loading time because 15% of the test fuel load was consumed. The fan was turned on at low speed at 45 minutes. At 7hours and 7 minutes from the beginning of the test, the coal bed was adjusted for less than 30 seconds. Test ended because the weight loss over a 30-minute period was less than 1.0% of the test fuel load and more than 90% of the test fuel load was consumed.

RUN #2-High (November 3, 2021) – Air control was set fully opened; total burn time was 107 minutes with a category High burn rate 5.52 kg/hr. Burn time without the cold start was 68 minutes. Kindling and start-up fuel were ignited together in a cold chamber (average surface temperature was 72.8°F and ambient temperature was 69.4°F). Anomaly occurred after 20

8431 Murphy Drive
Middleton, WI 53562

Telephone: 608-836-4400
Facsimile: 608-831-9279
www.intertek.com/building

minutes, see "General Discussion" section for details. Kindling was adjusted after 37 minutes from ignition. High fire load time was 1 min. The door was left open for 1 min after the loading time, then closed. The air control was always fully opened. The fan was started at full speed at 12 minutes after loading. The test run ended when 90 % ± 1% of the test full load was consumed.

RUN #2-Low (November 3, 2021) – Air control set to reach the minimum achievable burn rate (fully closed), burn time was 480 minutes with a compliant low burn rate category of 1.09 kg/hr. Load time was 1 min. The door was left open for 2 min after the loading time, then closed. 4 min after loading time, the air control was closed on a ½ inch rod as spacer. 6 min after loading time, the air control was closed on a 3/8-inch rod as spacer. The air control was set to fully closed position 11 minutes after loading time because 15% of the test fuel load was consumed. The fan was turned on at low speed at 30 minutes. A coal bed adjustment was attempted at 8 hours and 1 minute from the beginning of the test to increase burn rate without success. The coal bed was adjusted for less than 30 seconds. Test ended because the weight loss over a 30-minute period was less than 1.0% of the test fuel load and more than 90% of the test fuel load was consumed.

RUN #3-High (November 4, 2021) – Air control was set fully opened; total burn time was 122 minutes with a category High burn rate 4.99 kg/hr. Burn time without the cold start was 76 minutes. Kindling and start-up fuel were ignited together in a cold chamber (average surface temperature was 66.8°F and ambient temperature was 68.2°F). Kindling was adjusted after 44 minutes from ignition. High fire load time was 1 min. The door was left open for 1 min after the loading time, then closed. The air control was always fully opened. The fan was started at full speed at 3 minutes after loading. The test run ended when 90 % ± 1% of the test full load was consumed.

RUN #3-Low (November 4, 2021) – Air control set at the medium burn rate (3/8 inch from fully closed position), burn time was 355 minutes with a compliant medium burn rate category of 1.35 kg/hr. Load time was 1 min. The door was left open for 3 min after the loading time, then closed. 6 min after loading time, the air control was closed on a ½ inch rod as spacer. 8 min after loading time, the air control was closed on a 3/8-inch rod as spacer because 15% of the test fuel load was consumed. The fan was turned on at low speed at 60 minutes. A coal bed adjustment was attempted at 5 hours and 47 minutes from the beginning of the test to increase burn rate without success. The coal bed was adjusted for less than 30 seconds. Test ended because the weight loss over a 30-minute period was less than 1.0% of the test fuel load and more than 90% of the test fuel load was consumed.

intertek
Total Quality. Assured.

8431 Murphy Drive
Middleton, WI 53562

Telephone: 608-836-4400
Facsimile: 608-831-9279
www.intertek.com/building

TEST REPORT FOR STOVE BUILDER INTERNATIONAL INC.
Report No.: 104845527MTL-001R2
Date: 08/17/22

RESULT TABLES:
Table 2 to Table 9 present the results of the evaluation. On section 14, Table 10 to Table 13 present the results as per the adjunct summary sheet of ASTM E3053-17.

Table 2 - EMISSION RESULTS

#	TEST DATE	BURN RATES (kg/hr) (Dry)	PM EMISSION RATE (g/hr)	1ST HOUR EMISSIONS (g)	CO EMISSION RATE (g/hr)	CO EMISSION RATE (g/min)	HEATING EFF. (% HHV)
1H	2021-11-02	4.73	3.3	**6.0**	206	**3.4**	63%
1L	2021-11-02	1.20	1.0	**5.5**	58	**1.0**	64%
2H	2021-11-03	5.52	3.0	**4.0**	310	**5.2**	62%
2L	2021-11-03	1.09	0.38	**1.5**	69	**1.2**	65%
3H	2021-11-04	4.99	3.1	**5.4**	274	**4.6**	62%
3M	2021-11-04	1.35	0.8	**4.4**	50	**0.8**	64%

Table 3 - FUEL DATA SUMMARY

#	KINDLING WEIGHT (LBS)	KINDLING MC (%DB)	SU FUEL WEIGHT (LBS)	SU FUEL MC (%DB)	HIGH WEIGHT (LBS)	HIGH MC (%DB)	LOW/MED WEIGHT (LBS)	LOW/MED MC (%DB)
1	3.54	10	4.98	20.6	19.52	21.1	23.74	20.7
2	3.70	10	5.09	19.4	19.08	20.6	23.41	19.4
3	3.61	10	5.56	19.4	19.38	21.0	22.62	20.0

Table 4 - TEST LAB CONDITIONS

#	AMB. TEMP. (°F) before	AMB. TEMP. (°F) after	PRESSURE (In. Hg) before	PRESSURE (In. Hg) after	R.H.% % before	R.H.% %% after	AIR VEL. (Ft/min) before	AIR VEL. (Ft/min) after
1H	69.4	70.0	30.1	30.0	32.3	32.2	0	0
1L	70.0	70.0	30.0	30.0	32.2	32.2	0	0
2H	69.5	70.8	30.2	30.2	31.3	29.1	0	0
2L	70.8	70.2	30.2	30.2	29.1	25.1	0	0
3H	68.0	69.3	30.3	30.3	26.9	27.1	0	0
3M	69.3	70.1	30.3	30.3	27.1	25.1	0	0

intertek
Total Quality. Assured.

8431 Murphy Drive
Middleton, WI 53562

Telephone: 608-836-4400
Facsimile: 608-831-9279
www.intertek.com/building

TEST REPORT FOR STOVE BUILDER INTERNATIONAL INC.
Report No.: 104845527MTL-001R2
Date: 08/17/22

Table 5 - DILUTION TUNNEL

#	BURN TIME (min)	TUNNEL VELOCITY (ft/sec)	VOLUMETRIC FLOW RATE (dscf/min)	TUNNEL AVE. TEMP. (°R)	SAMPLE VOLUME (DSCF)		PARTICULATE CATCH (MG)	
					1	2	1	2
1H	133	16.93	314.92	585	15.525	15.635	2.8	2.7
1L	440	17.04	331.74	558	55.506	56.190	2.8	2.8
2H	107	16.66	303.59	600	12.812	12.902	2.1	2.2
2L	480	16.70	326.72	559	61.539	62.323	1.2	1.2
3H	122	16.95	313.63	593	14.441	14.544	2.3	2.5
3M	355	17.09	330.07	568	45.043	45.504	1.7	1.9

Table 6 - DILUTION TUNNEL PRECISION

#	SAMPLE RATIOS (-)		TOTAL EMISSIONS (g)		DEVIATION %	DEVIATION g/kg
	Train 1	Train 2	Train 1	Train 2		
1H	2698	2679	7.554	7.233	2.2%	0.54%
1L	2630	2598	7.363	7.274	0.6%	0.15%
2H	2535	2518	5.324	5.539	2.0%	0.49%
2L	2548	2516	3.058	3.020	0.6%	0.16%
3H	2650	2631	6.094	6.577	3.8%	0.95%
3M	2601	2575	4.422	4.893	5.1%	1.26%

Table 7 - GENERAL SUMMARY

#	BURN RATE (kg/hr)(Dry)	CHANGE IN SURFACE TEMP. (°F)	INITIAL DRAFT (in. wc)	BURN RATE RUN TIME (min)	AVERAGE DRAFT (in. wc)
1H	4.73	380	0.002	81	0.071
1L	1.20	214	0.062	440	0.047
2H	5.52	405	0.002	68	0.076
2L	1.09	221	0.065	480	0.048
3H	4.99	403	0.001	76	0.075
3M	1.35	201	0.062	355	0.054

8431 Murphy Drive
Middleton, WI 53562

Telephone: 608-836-4400
Facsimile: 608-831-9279
www.intertek.com/building

TEST REPORT FOR STOVE BUILDER INTERNATIONAL INC.
Report No.: 104845527MTL-001R2
Date: 08/17/22

Table 8 - CSA B415.1-10 SUMMARY

#	CO EMISSIONS (g/min)	HEATING EFFICIENCY (% HHV)	HEATING EFFICIENCY (% LHV)	HEAT OUTPUT (Btu/hr)
1H	3.4	63	67	53,000
1L	1.0	64	68	13,700
2H	5.2	62	66	60,700
2L	1.2	65	70	12,700
3H	4.6	63	66	54,900
3M	0.8	64	68	15,400

Table 9 - WEIGHTED AVERAGE CALCULATION

#	CAT	(E) PM EMISSION RATE (g/hr)	(CO) EMISSION RATE (g/hr)	HEAT OUTPUT Btu/hr	EFF. (% HHV)	EFF. (% LHV)	(K) Weighting Factor	(KxE) g/hr	(KxCO) g/hr	(KxCO) g/min	(K x HHV)	(K x LHV)
1H	H	3.34	206	53,000	63	67	6.7%	0.22	13.7	0.23	4.2	4.5
1L	L	1.00	58	13,700	64	68	20.0%	0.20	11.6	0.19	12.7	13.6
2H	H	3.05	310	60,700	62	66	6.7%	0.20	20.6	0.34	4.1	4.4
2L	L	0.38	69	12,700	65	70	20.0%	0.08	13.8	0.23	13.1	14.0
3H	H	3.12	274	54,900	63	66	6.7%	0.21	18.3	0.30	4.2	4.4
3M	M	0.79	50	15,400	64	68	40.0%	0.31	20.1	0.33	25.5	27.3
						Totals:	**100%**	**1.2**	**98**	**1.6**	**64**	**68**

SECTION 11

CONCLUSION

This test demonstrates that the HE250R (2.5R Series) wood heater is an affected facility under the definition given in the regulation. The emission rate of 1.2 g/hr meets the EPA requirements for the Step 2 limits.

HE250R is a representative model of the 2.5R Series. This series includes the following models: Solution 2.5 ZC II, Stratford II, FP10 Lafayette II, FP10 Lafayette IIS, FP12 Mundo II, HE250R, Destination 2.7, Matrix 2700, WFP-75 8411, HE275CF, HE275, Green Mountain Insert 90 8460 and St. Clair 2500.

8431 Murphy Drive
Middleton, WI 53562

Telephone: 608-836-4400
Facsimile: 608-831-9279
www.intertek.com/building

TEST REPORT FOR STOVE BUILDER INTERNATIONAL INC.
Report No.: 104845527MTL-001R2
Date: 08/17/22

SECTION 12
PHOTOGRAPHS



Figure 5 - Isometric view of unit



Figure 6 - Typical load

8431 Murphy Drive
Middleton, WI 53562

Telephone: 608-836-4400
Facsimile: 608-831-9279
www.intertek.com/building

TEST REPORT FOR STOVE BUILDER INTERNATIONAL INC.
Report No.: 104845527MTL-001R2
Date: 08/17/22

SECTION 13
REVISION LOG

REVISION #	DATE	PAGES	REVISION
0	11/25/21	N/A	Original Report Issue
1	7/8/22	6	Added fuel species and fuel length
		20	Added statement regarding non-use of ambient room filter
		33	Corrected heat output range from 13,200 Btu/hr – 56,200 Btu/hr to 12,700 Btu/hr – 60,700 Btu/hr.
		3	Report originally created by Claude Pelland, who is no longer with Intertek. Report revised by Brian Ziegler and reviewed by Ken Slater.
2	8/17/22	19-20	Added “overall firebox volume” to report.

intertek
Total Quality. Assured.

8431 Murphy Drive
Middleton, WI 53562

Telephone: 608-836-4400
Facsimile: 608-831-9279
www.intertek.com/building

TEST REPORT FOR STOVE BUILDER INTERNATIONAL INC.
Report No.: 104845527MTL-001R2
Date: 08/17/22

SECTION 14

APPENDIX - REPORT TABLES AS PER ASTM E3053-17

Table 10 - Section 1 - Model Identification

SECTION 1 – Model Identification	
Model Name(s)/Number(s)	2.5R Series
Manufacturer	Stove builder international inc.
Address 1	250 Rue Copenhague
Address 2	Saint-Augustin-de-Desmaures
Appliance Category(s) (Free-standing, Insert, etc.)	Insert and Fireplace
Usable Firebox Volume - ft^3	1.94
Catalytic/Non-Cat	Non-Cat
Convection Air Fan (No, Standard, Optional)	Optional
SECTION 1B – Laboratory Information	
Testing Laboratory	Intertek testing services
Address 1	1829 32nd Avenue
Address 2	Lachine, QC H8T 3J1
ISO/Accreditation Info	ISO 17025
Dates Tested	02/22/2021 - 02/25/2021
Test Methods/Standards	CAS B415.1-10, ASTM E2515, ASTM E3053
Dilution Tunnel Inside Diameter - in.	8.00
Fliter Diameter - mm	47
Filter Material	Pall TX40

Table 11 - Section 2 - Test Conditions Summary

SECTION 2 – Test Conditions Summary						
Model Name(s)/Number(s)	2.5R Series					
Usable Firebox Volume - ft^3	1.94					
Convection Air Fan (No, Standard, Optional)	Optional					
Test Run #	1	1	2	2	3	3
Date Tested	2021-11-02	2021-11-02	2021-11-03	2021-11-03	2021-11-04	2021-11-04
Test Run Category (L, M, H)	H	L	H	L	H	M
Average Barometric Pressure - in Hg	30.05	30.00	30.20	30.20	30.30	30.30
Max. Observed Ambient Temp - °F	90	89	85	89	85	90
Min. Observed Ambient Temp - °F	70	71	69	75	68	79
Max. Observed Filter Temp - °F	88 & 82	87.9 & 87.4	88.4 & 86.8	89.8 & 87.4	86.7 & 86.1	88.7 & 87.3

intertek
Total Quality. Assured.

8431 Murphy Drive
Middleton, WI 53562

Telephone: 608-836-4400
Facsimile: 608-831-9279
www.intertek.com/building

TEST REPORT FOR STOVE BUILDER INTERNATIONAL INC.
Report No.: 104845527MTL-001R2
Date: 08/17/22

Test Run Air Settings						
Primary (measured up from minimum)	13/16''	3/16'' (min)	13/16''	3/16'' (min)	13/16''	3/8''
Secondary (measured up from minimum)	fixed	fixed	fixed	fixed	fixed	fixed
Convection Air Fan Setting	Max	Low	Max	Low	Max	Low
Test Fuel Load						
Cordwood Fuel Species	Beech	Beech	Beech	Beech	Beech	Beech
Specific Gravity (from Table 1)	0.67	0.67	0.67	0.67	0.67	0.67
Higher Heating Value - Btu/lb (from Annex A1)	8088	8088	8088	8088	8088	8088
Nom. Test Fuel Load Piece Length - in.	16	16	16	16	16	16
Number of Test Fuel Pieces	5	6	5	6	5	6
Test Fuel Weight						
Kindling - As Fired lb	3.54	na	3.70	na	3.61	na
Kindling Wt. - As % of Test Fuel Load	18%	na	19.4%	na	18.6%	na
Kindling Moisture - % DB	10%	na	10%	na	10%	na
Kindling - kg DB	1.46	na	1.52	na	1.49	na
SU Fuel - As Fired lb	4.98	na	5.1	na	5.6	na
SU Fuel Wt. - As % of Test Fuel Load	26%	na	26.7%	na	28.7%	na
SU Fuel Moisture - % DB	21%	na	19%	na	19%	na
SU Fuel - kg DB	1.87	na	1.93	na	2.11	na
Test Fuel Load - As Fired lb	19.52	23.74	19.08	23.41	19.38	22.62
Ave. Test Fuel Load MC % DB	21.1%	20.7%	20.6%	19.4%	21.0%	20.0%
Test Fuel Load - kg DB	7.31	8.92	7.18	8.89	7.27	8.55
Test Fuel Loading Density - lb/ft^3	10.06	12.24	9.84	12.07	9.99	11.66
Residual SU Fuel Wt. - As Fired lb	2.4	na	2.4	na	2.3	na
Residual SU Fuel Wt. - As % of Test Fuel Load	12%	na	12.3%	na	11.7%	na
Test Run Duration - minutes	133	440	107	480	122	355
Test Run Duration - h	2.22	7.33	1.78	8.00	2.03	5.92
Test Fuel Load Wt. at End of Test - As Fired lb	2.1	0.3	2.0	0.4	2.1	1.19
Total Total Fuel Burned - kg DB	8.64	8.80	8.64	8.69	8.89	8.01
% Test Fuel Load Wt. at End of Test	10.5%	1.1%	10.7%	1.9%	10.8%	5.2%

intertek
Total Quality. Assured.

8431 Murphy Drive
Middleton, WI 53562

Telephone: 608-836-4400
Facsimile: 608-831-9279
www.intertek.com/building

TEST REPORT FOR STOVE BUILDER INTERNATIONAL INC.
Report No.: 104845527MTL-001R2
Date: 08/17/22

Table 12 - Section 3 - Test Run Results Summary

SECTION 3 – Test Run Results Summary						
Model Name(s)/Number(s)	2.5R Series					
Usable Firebox Volume - ft^3	1.94					
Convection Air Fan (No, Standard, Optional)	Optional					
Test Run #	1	1	2	2	3	3
Date Tested	11-2-21	11-2-21	11-3-21	11-3-21	11-4-21	11-4-21
Test Run Category	H	L	H	L	H	M
Burn Rate - kg/h DB	4.72	1.20	5.51	1.09	4.99	1.35
Burn Rate - As % of Low to High Midpoint	na	na	na	na	na	41%
Burn Duration - h	2.22	7.33	1.78	8.00	2.03	5.92
Heat Output - Btu/h	52946	13679	60716	12706	54888	15389
Dilution Tunnel Flow Rate - dscfm						
Average	314.92	331.74	303.59	326.72	313.63	330.07
Maximum Observed	342.77	343.25	335.15	336.13	346.85	342.31
Minimum Observed	295.21	306.90	274.91	304.95	293.35	313.01
Dilution Tunnel Temperature - °F						
Average	125	98	140	99	133	108
Maximum Observed	165	145	195	146	173	138
Minimum Observed	70	79	69	82	68	89
Sample Dryer Exit Max. Temp (or Max. DGM Temp) - °F						
Train 1	70	71	70	73	69	72
Train 2	70	71	69	74	69	72
Average Sample Flow Rates - dscfm						
Train 1	0.117	0.126	0.120	0.128	0.118	0.127
Train 2	0.118	0.128	0.121	0.130	0.119	0.128
Sample Vacuum - in. Hg						
Train 1						
Start	0.0	0.0	0.0	0.0	0.0	0.0
End	0.5	0.5	0.5	0.5	0.6	0.4
Maximum Observed	0.5	0.5	0.6	0.5	0.6	0.4
Train 2						
Start	0.0	0.0	0.0	0.0	0.0	0.0
End	0.4	0.5	0.4	0.4	0.7	0.4

intertek
Total Quality. Assured.

8431 Murphy Drive
Middleton, WI 53562

Telephone: 608-836-4400
Facsimile: 608-831-9279
www.intertek.com/building

TEST REPORT FOR STOVE BUILDER INTERNATIONAL INC.
Report No.: 104845527MTL-001R2
Date: 08/17/22

Maximum Observed	0.4	0.5	0.5	0.5	0.8	0.4
Proportional Rate Variation (10-minute basis)						
# of Occurences > 5%, Total Both Trains	3	1	3	0	2	0
# of Occurences > 10%, Total Both Trains	2	0	2	0	0	0
Highest PR Variation - %, Either Train	110.6%	105.2 %	111.8 %	96.0%	105.2 %	96.8%
Total Sample Volume - dscm (m^3)						
Train 1	0.440	1.572	0.363	1.743	0.409	1.276
Train 2	0.443	1.591	0.365	1.765	0.412	1.289
Average Dilution Ratio						
Train 1	2697.9	2629.7	2535.4	2548.4	2649.6	2601.4
Train 2	2678.9	2597.8	2517.8	2516.4	2630.9	2575.0
Total PM Catch - mg						
Train 1	2.8	2.8	2.1	1.2	2.3	1.7
Train 2	2.7	2.8	2.2	1.2	2.5	1.9
Total Catch PM Weight Excluding Probe - mg						
Train 1 - Immediately Post-Test	2.5	2.6	1.8	0.9	2.0	1.7
Train 1 - Final Dry Weight	2.5	2.6	1.8	0.9	2.0	1.6
Train 2 - Immediately Post-Test	2.4	2.6	1.8	1.0	2.0	1.8
Train 2 - Final Dry Weight	2.4	2.6	1.8	1.0	2.0	1.7
Final Dry Probe PM Catch - mg						
Train 1	0.3	0.2	0.3	0.3	0.3	0.1
Train 2	0.3	0.2	0.4	0.2	0.5	0.2
Probe PM Catch as % of Total PM Catch						
Train 1	10.7%	7.1%	14.3%	25.0%	13.0%	5.9%
Train 2	11.1%	7.1%	18.2%	16.7%	20.0%	10.5%
Total PM Emissions - g						
Train 1	7.554	7.363	5.324	3.058	6.094	4.422
Train 2	7.233	7.274	5.539	3.020	6.577	4.893
Average	7.393	7.318	5.432	3.039	6.336	4.657
PM Emission Train Precision - %	2.2%	0.6%	2.0%	0.6%	3.8%	5.0%
PM Emission Train Precision - g/kg	0.04	0.01	0.02	0.00	0.05	0.06
PM Concentration - mg/m^3						
Train 1	6.37	1.78	5.79	0.69	5.62	1.33
Train 2	6.10	1.76	6.02	0.68	6.07	1.47
PM Emission Rate - g/h	3.34	1.00	3.05	0.38	3.12	0.79
PM Emission Rate - g/Mj (from CSA B415.1-10/15)	0.10	0.07	0.07	0.03	0.09	0.05

8431 Murphy Drive
Middleton, WI 53562

Telephone: 608-836-4400
Facsimile: 608-831-9279
www.intertek.com/building

TEST REPORT FOR STOVE BUILDER INTERNATIONAL INC.
Report No.: 104845527MTL-001R2
Date: 08/17/22

PM Emission Rate - lb/MMBtu (from CSA B415.1-10/15)	0.23	0.16	0.17	0.07	0.20	0.11
First Hour Emissions						
Sampling Duration (minutes)	60.00	60.00	60.00	60.00	60.00	60.00
Average Sample Flow Rate - dscfm	0.1187	0.1198	0.1210	0.1219	0.1195	0.1230
Total Sample Volume - dscm (m^3)	0.202	0.204	0.206	0.207	0.203	0.209
Average Dilution Tunnel Flow Rate - dscfm	324.65	315.96	305.85	312.57	319.86	315.70
Average Dilution Ratio	2734.7	2636.8	2526.8	2564.8	2676.2	2566.5
Total PM Catch - mg	2.2	2.1	1.6	0.6	2.0	1.7
PM Concentration - mg/m^3	10.91	10.31	7.78	2.90	9.85	8.13
Total PM Emissions - g	6.02	5.54	4.04	1.54	5.35	4.36
PM Emission Rate - g/h	6.02	5.54	4.04	1.54	5.35	4.36
Total CO Emissions - g (CSA B415.1-10/15)	277.0	426.0	351.0	554.0	347.0	297.0
CO Emissions Rate - g/h (CSA B415.1-10/15)	205.6	58.1	309.6	69.2	273.8	50.2
Test Duration w/o Cold Start (High Fire Only) - h	1.35	7.33	1.13	8.00	1.27	5.92
Overall Efficiency - CSA B415.1-10/15						
% HHV Basis	62.8	63.7	61.7	65.4	61.6	63.7
% LHV Basis	67.3	68.2	66.1	70.0	66	68.3

Table 13 - Section 4 - Weighted Average Summary

SECTION 4 - Weighted Average Summary

Model Name(s)/Number(s)	2.5R Series		
Usable Firebox Volume - ft^3	1.94		
Convection Air Fan (No, Standard, Optional)	Optional		
Average for Each Test Run Category	L	M	H
Burn Rate - kg/h DB	1.14	1.35	5.08
PM Emission Rate - g/h	0.69	0.79	3.17
CO Emissions Rate - g/h	63.7	50.2	263.0
Overall Efficiency - CSA B415.1-10			
% HHV Basis	65	64	62
% LHV Basis	69	68	66
Heat Output - Btu/h	13200	15400	56200
Category Weighting	40%	40%	20%
ASTM E3053 Weighted Averages			

8431 Murphy Drive
Middleton, WI 53562

Telephone: 608-836-4400
Facsimile: 608-831-9279
www.intertek.com/building

TEST REPORT FOR STOVE BUILDER INTERNATIONAL INC.
Report No.: 104845527MTL-001R2
Date: 08/17/22

PM Emission Rate - g/h	1.2		
CO Emissions Rate - g/h	98		
CO Emissions Rate - g/min	1.6		
Overall Efficiency - CSA B415.1-10			
% HHV Basis	64		
% LHV Basis	68		
Heat Output Range - Btu/h	12,700	to	60,700

intertek
Total Quality. Assured.

STOVE BUILDER INTERNATIONAL PRODUCT EVALUATION

PRODUCT EVALUATED
SOLUTION 2.5 ZC II, STRATFORD II, FP10 LAFAYETTE II, FP10 LAFAYETTE IIS, FP12 MUNDO II, HE250R, DESTINATION 2.7, MATRIX 2700, WFP-75 8411, HE275, HE275CF, GREEN MOUNTAIN INSERT 90 8460 AND ST. CLAIR 2500

EVALUATION PROPERTY
U.S. ENVIRONMENTAL PROTECTION AGENCY 40 CFR PART 60

REPORT NUMBER
104845527MTL-002

ORIGINAL ISSUE DATE
11/25/21

LAST REVISED DATE
ORIGINAL

PAGES
20

DOCUMENT CONTROL NUMBER
SFT-BC-OP-19H
© 2017 INTERTEK

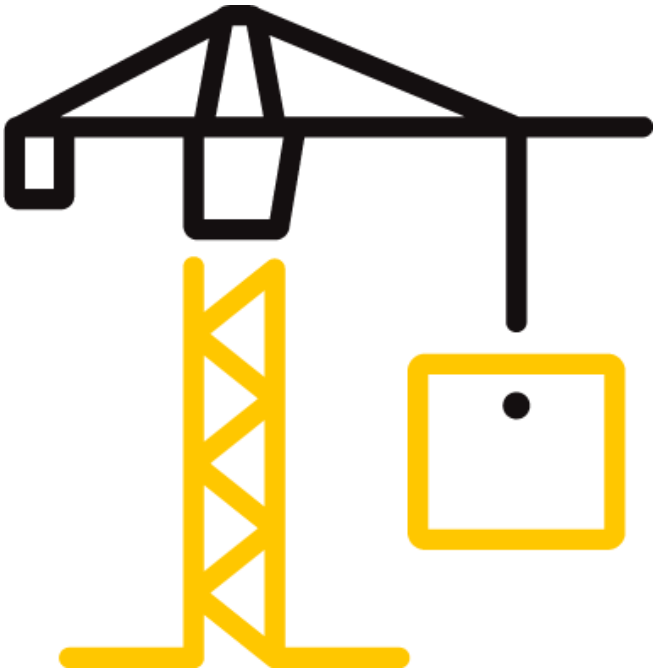

8431 Murphy Drive
Middleton, Wisconsin 53562

Telephone: 608-836-4400
Facsimile: 608-831-9279
www.intertek.com/building

PRODUCT EVALUATION FOR STOVE BUILDER INTERNATIONAL
Report No.: 104576994MTL-002
Date: 11/25/21

PRODUCT EVALUATION RENDERED TO:	
Company Name:	Stove Builder International
Address:	250 rue de Copenhague
	St-Augustin-de-Desmaures, QC
	G3A 2H3, Canada
Contact Person:	Guillaume Thibodeau-Fortin
Tel:	1-418-878-3040 x5224
Email:	gthibodeaufortin@sbi-international.com

Table of Contents

1 Introduction 3
2 Product and Assembly Description 3
2.1. Product Description: 3
2.2. Product Traceability: 3
2.3. Product Certification: 3
3 Reference Documents 4
4 Evaluation Method 4
5 Conclusion 4
6 APPENDIX 6
7 LAST PAGE & REVISION SUMMARY 20

This report is for the exclusive use of Intertek's Client and is provided pursuant to the agreement between Intertek and its Client. Intertek's responsibility and liability are limited to the terms and conditions of the agreement. Intertek assumes no liability to any party, other than to the Client in accordance with the agreement, for any loss, expense or damage occasioned by the use of this report. Only the Client is authorized to permit copying or distribution of this report and then only in its entirety. Any use of the Intertek name or one of its marks for the sale or advertisement of the tested material, product or service must first be approved in writing by Intertek. The observations and test results in this report are relevant only to the sample(s) tested. This report by itself does not imply that the material, product, or service is or has ever been under an Intertek certification program.

intertek
Total Quality. Assured.

8431 Murphy Drive
Middleton, Wisconsin 53562

Telephone: 608-836-4400
Facsimile: 608-831-9279
www.intertek.com/building

PRODUCT EVALUATION FOR STOVE BUILDER INTERNATIONAL
Report No.: 104576994MTL-002
Date: 11/25/21

1 Introduction

Intertek Testing Services NA Ltd./Inc. (Intertek) is conducting a product evaluation for Stove Builder International, on Solution 2.5 ZC II, Stratford II, FP10 Lafayette II, FP10 Lafayette IIS, FP12 Mundo II, Destination 2.7, Matrix 2700, WFP-75 8411, HE275CF, HE275, Green Mountain Insert 90 8460 and St. Clair 2500 to evaluate if the differences with the tested HE250R will increase particulate matter emission rate limit. The evaluation is being conducted to determine if items listed in *U.S. Environmental Protection Agency 40 CFR Part 60 Standards of Performance for New Residential Wood Heaters; Final Rule, SECTION 60.533(k)* , CSA B415.1-10 , ASTM E2515 Ed.2011 (R2017) , and ASTM E3053-2017 will show equivalency with the previously tested HE250R.

2 Product and Assembly Description

2.1. Product Description:

The models from the 2.5R Series (HE250R) wood fuel room heater are constructed of sheet steel. The outer dimensions are 21 7/8-inches deep from the face plate to the rear, 37 3/16-inches high, and 34 5/16-inches wide in the front. The units have a door located on the front with a viewing glass.

Construction drawings are in appendix and named VB00015-V01.

This PEV refers to a product described in Intertek Test Report 104845527MTL-001. Consult that document for additional information and specific test conditions. Most of these models were already certify to US EPA, the series was retested per manufacturer's request.

2.2. Product Traceability:

The test specimen identification is as provided by the client and Intertek accepts no responsibility for any inaccuracies therein.

2.3. Product Certification:

Stove Builder International is an Intertek testing client and an Intertek Listing and Follow-up Service client. Models Solution 2.5 ZC II, Stratford II, FP10 Lafayette II, FP10 Lafayette IIS, FP12 Mundo II, HE250R, Destination 2.7, Matrix 2700, WFP-75 8411, HE275CF, HE275, Green Mountain Insert 90 8460 are already listed within Intertek. The test done for emission is a re-test. Model St. Clair 2500 is in the process of listing within Intertek. Currently, Intertek does not have any Listings for St. Clair 2500 contained in Intertek's Directory of Listed Building Products.

Authorities Having Jurisdiction (AHJ) should be consulted in all cases as to the particular requirements covering the installation and use of Intertek certified products, equipment, systems, devices and materials. The AHJ should be consulted before construction. Fire resistance assemblies and products are developed by the design submitter and have been investigated by Intertek for compliance with specific requirements. The published information (product and design listings) cannot always address every construction nuance encountered in the field. When field issues arise, it is recommended the first contact for assistance be the technical service staff provided by the product manufacturer noted for the design. Users of fire resistance assemblies are advised to consult the test standard referenced for each Intertek certified product. The test standard includes specifics concerning alternate materials and alternate methods of construction. Only products which bear Intertek's Mark are considered as certified. The appearance of a company's name or product in Intertek Directory of Listed Building Products does not in itself assure that products so identified have been manufactured under Intertek's Follow-Up Service. Only those products bearing the Intertek Mark should be considered to be Listed and covered under Intertek's Follow-Up Service. Always verify the Mark on the product before using it.

8431 Murphy Drive
Middleton, Wisconsin 53562

Telephone: 608-836-4400
Facsimile: 608-831-9279
www.intertek.com/building

PRODUCT EVALUATION FOR STOVE BUILDER INTERNATIONAL
Report No.: 104576994MTL-002
Date: 11/25/21

3 Reference Documents

As part of this evaluation, Intertek has directly or indirectly used the following referenced documents:

- *U.S. Environmental Protection Agency 40 CFR Part 60 Standards of Performance for New Residential Wood Heaters; Final Rule, SECTION 60.533(k)*, CSA B415.1-10 , ASTM E2515 Ed.2011 , and ASTM E3053-2017.
- SBI drawing numbers: EB00058-V01, EB00059-V01, FP10RS-V01, FP10R-V01, FP12R-V01, OB02700-V01, OB04007-V01, SF00320-V01, SF00325-V01, SF00622-V01, VB00015-V01, VB00017-V01, VB00019-V01.
- Intertek Testing Report No.: 104845527MTL-001

4 Evaluation Method

This PEV represents the results of an evaluation on wood room heaters models listed in object when compared to the tested HE250R. This investigation was authorized by SBI on November 15, 2021. Drawings number EB00058-V01, EB00059-V01, FP10RS-V01, FP10R-V01, FP12R-V01, OB02700-V01, OB04007-V01, SF00320-V01, SF00325-V01, SF00622-V01, VB00015-V01, VB00017-V01, VB00019-V01 were received on November 15, 2021 at the Intertek Lachine facility. Drawings can be found in appendix.

The models listed in subject are wood fireplace and fireplace inserts manufactured based on the construction of the tested HE250R. The combustion room and air intake of all the mentioned units are identical.

Some variations were noted during the investigation. The variations are esthetical only and they are as follows:

- The loading door differs by shape;
- The façade differs by shape;

Design drawings were evaluated to determine similarities between the above-mentioned models. Drawings show internal fire box size to be the same at 16” on sides and 12 7/8” in the center deep, 10 1/2" high (from brick to lower tube) and 18 1/4" wide at the back of the firebox ± ¼”. All appliances share a 6" flue collar and have the same primary air entrance area. Differences noted during this evaluation were on the door shape and decorative side panels as well as the typical look of the façade of all unit' inspired by their typical branding look.

5 Conclusion

Intertek has conducted this product evaluation for Stove Builder International, on Solution 2.5 ZC II, Stratford II, FP10 Lafayette II, FP10 Lafayette IIS, FP12 Mundo II, Destination 2.7, Matrix 2700, WFP-75 8411, HE275CF, HE275, Green Mountain Insert 90 8460 and St. Clair 2500, to evaluate if the differences with the tested HE250R will increase particulate matter emission rate limit. The evaluation was conducted to determine if items listed in *U.S. Environmental Protection Agency 40 CFR Part 60 Standards of Performance for New Residential Wood Heaters; Final Rule, SECTION 60.533(k)* , CSA B415.1-10 , ASTM E2515 Ed.2011 (R2017) , and ASTM E3053-2017 will show equivalency with the tested HE250R.

Based on the information contained and referenced herein, it is Intertek’s professional judgment based on sound engineering principles that the following is true:

- Changes made are only aesthetical and do not increase particulate matter emission rate.

8431 Murphy Drive
Middleton, Wisconsin 53562

Telephone: 608-836-4400
Facsimile: 608-831-9279
www.intertek.com/building

PRODUCT EVALUATION FOR STOVE BUILDER INTERNATIONAL
Report No.: 104576994MTL-002
Date: 11/25/21

INTERTEK TESTING SERVICES NA LTD.

Reported by: 

Hussein Mortada , CPI.
Engineer
Intertek Lachine

Reviewed by: 

Brian Ziegler
Project Team Leader
Building Products Division

8431 Murphy Drive
Middleton, Wisconsin 53562

Telephone: 608-836-4400
Facsimile: 608-831-9279
www.intertek.com/building

6 APPENDIX

Drawings EB00058-V01,
Drawings EB00059-V01,
Drawings FP10RS-V01,
Drawings FP10R-V01,
Drawings FP12R-V01,
Drawings OB02700-V01,
Drawings OB04007-V01,
Drawings SF00320-V01,
Drawings SF00325-V01,
Drawings SF00622-V01,
Drawings VB00015-V01,
Drawings VB00017-V01,
Drawings VB00019-V01

8431 Murphy Drive
Middleton, Wisconsin 53562

Telephone: 608-836-4400
Facsimile: 608-831-9279
www.intertek.com/building

7 LAST PAGE & REVISION SUMMARY

DATE	SUMMARY	REPORTER	REVIEWER
11/25/21	Original	Claude Pelland	Brian Ziegler

intertek
Total Quality. Assured.

WOOD HEATER EMISSION TEST - PRE-TEST CHECK LIST REQUIREMENTS

Date: Nov 02-2021	Project : G104845527	Project Engineer:	C.Pelland
Manufacturer SBI	Model: 2.5R Series		

APPLICABLE STANDARD & ARTICLE #	REQUIREMENTS	Conformance (OK, NC or NA)	Comment
ASTM E2515-11 9.2.4 Smoke Capture and velocity head, static pressure and temp	100% of the chimney effluent collected.	OK	
ASTM E2515-11 9.3.1 Velocity measurement (at center)	Record velocity head, static pressure and temp (prior to ignition). Velocity head constant (less than 5% change for 1 min.)	OK	
ASTM E2515-11 9.3.2 Velocity Traverse measurement	Record velocity head, static pressure and temp (prior to ignition) at different point specified in the	OK	SDee datasheet
ASTM E2515-11 9.4.1 Pretest preparation: filter check &	filters without irregularities. Label the filter with ink	OK	
ASTM E2515-11 9.4.2 & 3 Pretest preparation: Probe cleaning	With acetone. Identification of the probe.	OK	checked during filter prep
ASTM E2515-11 9.4.4 Pretest preparation: Desicate filters, gasket & probe	Dessicate and weight component at interval not less then 6 hr until constant reading (difference not more than 0.2 mg between 2 consecutive readings)	OK	See filters/propes datasheets
ASTM E2515-11 9.6.1 Leak check of metering system (from pump to DGM outlet)	Maintain 5 to 7 in. w.c. stable durning 1 minute. Check prior initial use and at least semi-annually thereafter.	OK	See datasheets
ASTM E2515-11 9.6.4.1 PRE-test leak check (Sampling trains)	Less then 0.01 cfm OR 4% of avg sampling rate (0.001 x .04 = .004) @ 15 in Hg OR at the highest sampling vacuum level (which is 5 in. Hg)	OK	See Datasheets
ASTM E2515-11 9.6.4.2 PRE-test leak check (traverse-pitot tube)	Velocity pressure: Hold positive pressure of 3.0'' w.c. during 15 sec. Static pressure side: Hold negative pressure of 3.0'' w.c. during 15 sec.	OK	verified before pitot tube use
ASTM E2515-11 9.7.2 Test facility air velocity	less than 50 ft/min (before starting fire)	OK	logged in datasheet
ASTM E2515-11 9.8 Probe inlet location	2'' centroidal area, more than 1in apart. Block off the opening aroud the probe to prevent air leak	OK	Probes marked prior to insertion
ASTM E2515-11 9.8.2 tunnel gas static pressure	at the beginning and at the end of each test run	OK	

ARTICLE E3053-18	REQUIREMENTS		
ASTM E3053-18 8.1.4 Pre-conditioning (pre-burn)	50hr minimum a medium fire (intermiment operation)	OK	checked and logged on datasheet
ASTM E3053-18 8.1.5 &.6 Pre-conditioning (pre-burn) Recording	Record time, fuel weight, fuel moisture content, flue gas temperature	OK	See fuel datasheets, see datalogger for flue gas temp
ASTM E3053-18 8.2.4 Surface temperature	Install heater surface temperature sensor	OK	T/C connected individually computer averaged
ASTM E3053-18 8.2.6 Flue gas temperature	Install flue gas temperature sensor	OK	same predrilled connector used T/C insertion <marked
ASTM E3053-18 8.3 Firebox volume	Firebox volume calculation	OK	Computered measurements. Assumption checked
ASTM E3053-18 8.4.1.1 Test fuel load weight	Calculate the load weight: (firebox (ft3)) * (applicable load density)	OK	Computer generated, manually checked
ASTM E3053-18 8.4.1.2 to 9 Test fuel load weight	Use ASTM 3053 Excel file to respect fuel load and sub-load restriction	OK	See above
ASTM E3053-18 8.4.2.4 Kindling moisture	Stored 48hr at 70F & 50% RH = 10%	Ok	Assumed to be 10% MC
ASTM E3053-18 8.4.2.7 Fuel temperature	allowable test facility temperature (90F max), at least 24 hr storage	OK	
ASTM E3053-18 8.4.2.8 test fuel length	plus or minus 1 in of the nominal	OK	measured more accurately

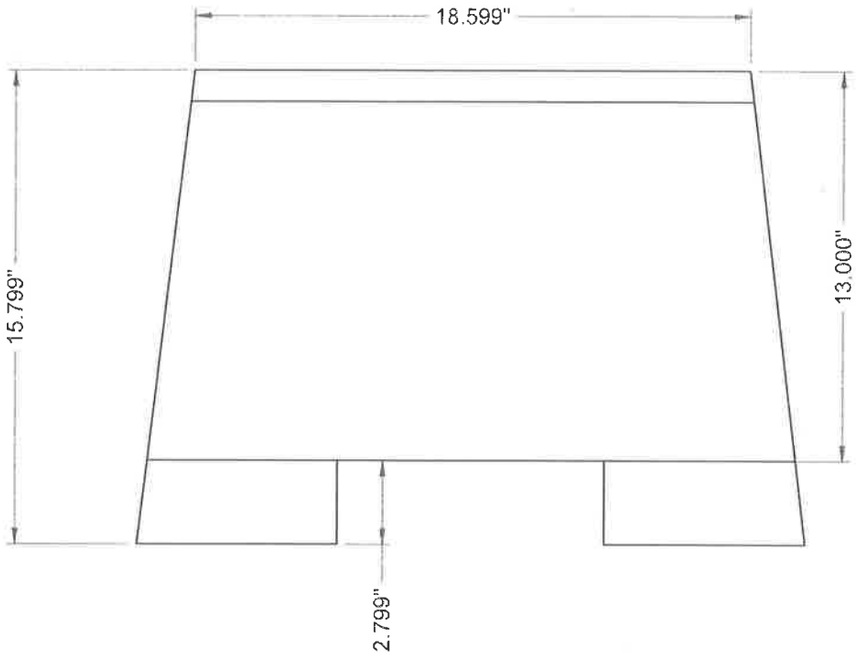

3359.895 in^3
1.94 ft^3

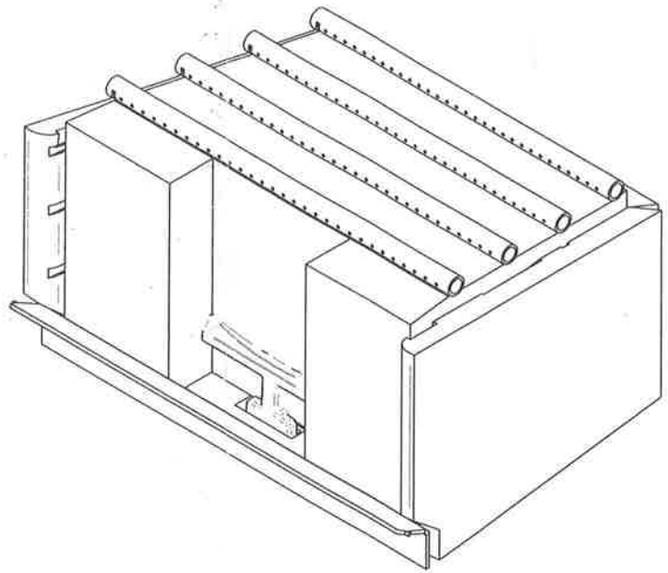

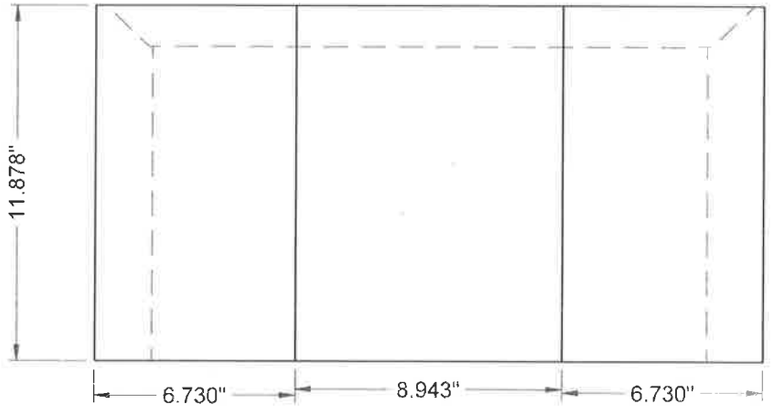

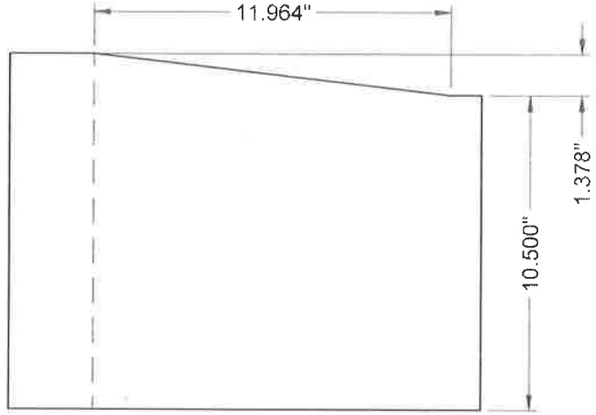

checked
C. Pelland
2 NOV 2021

© 2019 FABRICANT DE POÊLE INTERNATIONAL INC. TOUS DROITS RESERVÉS / ALL RIGHTS RESERVED

FABRICANT DE POÊLES INTERNATIONAL INC.
250, rue de Copenhague, Saint-Augustin-de-Desmaures
(Québec) G3A 2H3
Tél : (418) 878-3040
Fax : (418) 878-3001
www.sbi-international.com

TOLÉRANCES
FRACTION ± 1/32"
XX ±.020"
XXX ±.010"
ANGLES ±0.5°
THESE ALLOWANCES ARE NOT CUMULATIVE

NOM DE LA PIECE / PART NAME
UFV 2.5R series

REVISIONS / REVISIONS
01A 2021-11-01

CONCEPTEUR	DESSINATEUR	PAGE	DESSIN / DRAWING NBR
GTF	GTF	1 de 1	

CONFIDENTIAL

Fuel load Data - HIGH

Date: 2 Nov 2021

Run #: 1

Rev date: 11-01-2021

Doc rev: Rev 3

November 20 Adjunct to ASTM E XXXX Wood Heater Cordwood Test Method
Cordwood Fuel Load Calculators - 10 lb/ft³ Nominal Load Density
Core 45-65% of Total Load Weight, Remainder 35-55% of Total Load Weight
Values to be input manually

THIS DOCUMENT IS NOT AN ASTM STANDARD; IT IS UNDER CONSIDERATION WITHIN AN ASTM TECHNICAL COMMITTEE BUT HAS NOT RECEIVED ALL APPROVALS REQUIRED TO BECOME AN ASTM STANDARD. IT SHALL NOT BE REPRODUCED OR CIRCULATED OR QUOTED, IN WHOLE OR IN PART, OUTSIDE OF ASTM COMMITTEE ACTIVITIES EXCEPT WITH THE APPROVAL OF THE CHAIRMAN OF THE COMMITTEE HAVING JURISDICTION AND THE PRESIDENT OF THE SOCIETY. *COPYRIGHT ASTM, 100 BARR HARBOR DRIVE, WEST CONSHOHOCKEN, PA 19428. ALL RIGHTS RESERVED.*

For All Usable Firebox Volumes - High Fire Test Only

Nominal Required Load Density (wet basis)	10	lb/ft³			
Usable Firebox Volume	1.94	ft³			
Total Nom. Load Wt. Target	19.4	lb			
Total Load Wt. Allowable Range	18.40	to	20.40	lb	
Core Target Wt. Allowable Range	8.7	to	12.60	lb	
Remainder Load Wt. Allowable Range	6.80	to	10.70	lb	
					Mid-Point
Core Load Pc. Wt. Allowable Range	2.90	to	4.90	lb	3.90
Remainder Load Pc. Wt. Allowable Range	1.90	to	10.70	lb	6.30

	Pc. #		
Core Load Piece Wt. Actual	1	3.572	lb
	2	3.878	lb
	3	3.490	lb
Core Load Total. Wt. Actual			lb
	Pc. #		
Remainder Load Piece Wt.	1	5.341	lb
(1 to 3 Pcs.)	2	3.241	lb
	3		lb
Remainder Load Piece Weight Ratio - Small/Large			≤ 67%
Remainder Load Tot. Wt. Act			lb
Total Load Wt. Actual			lb
Core % of Total Wt.			45-65%
Remainder % of Total Wt.			35-55%
Actual Load % of Nominal Target			95-105%
Actual Fuel Load Density			lb/ft³

Kindling and Start-up Fuel

Maximim Kindling Wt. (20% of Tot. Load Wt.)	0.00	lb
Actual Kindling Wt.	3.539	lb
Maximum Start-up Fuel Wt. (30% of Tot. Load Wt.)	0.00	lb
Actual Start-up Fuel Wt.	4.984	lb

Cal. Block #: SBI-153

12%: 12.0

22%: 22.0

Wood moisture meter #: SBI-229

Room temp. (°F): 68.8

Room RH (%): 32.59

Ambiant hygrometer # : SBI-213

Fuel Piece Moisture Reading (%-dry basis)

1	2	3	min/maj > 40%	Lenght [in]	Squared
27.0	25.9	21.0	81%	16"	No
22.3	17.7	20.5	70%	15 1/4"	No
25.8	18.9	16.7	67%	15 1/4"	No
21.6	22.0	18.9	94%	15 1/2"	No
26.8	16.2	15.3	56%	16 1/4"	No

Kindling Moisture (%-dry basis)

10	10	10

Start-up Fuel Moisture Readings (%-dry basis)

23.8	16.6	21.5

Signature:

Fuel load data - LOW

Date: 2 Nov 2021 **Rev date:** 11-01-2021

Run #: #1 **Doc rev:** Rev 3

November 20, 2015 Adjunct to ASTM E XXXX Wood Heater Cordwood Test Method
Cordwood Fuel Load Calculators - 12 lb/ft^3 Nominal Load Density
Core 45-65% of Total Load Weight, Remainder 35-55% of Total Load Weight
Values to be input manually

THIS DOCUMENT IS NOT AN ASTM STANDARD; IT IS UNDER CONSIDERATION WITHIN AN ASTM TECHNICAL COMMITTEE BUT HAS NOT RECEIVED ALL APPROVALS REQUIRED TO BECOME AN ASTM STANDARD. IT SHALL NOT BE REPRODUCED OR CIRCULATED OR QUOTED, IN WHOLE OR IN PART, OUTSIDE OF ASTM COMMITTEE ACTIVITIES EXCEPT WITH THE APPROVAL OF THE CHAIRMAN OF THE COMMITTEE HAVING JURISDICTION AND THE PRESIDENT OF THE SOCIETY. *COPYRIGHT ASTM, 100 BARR HARBOR DRIVE, WEST CONSHOHOCKEN, PA 19428. ALL RIGHTS RESERVED.*

For Usable Firebox Volumes up to 3.0 ft^3 - Low and Medium Fire

Nominal Required Load Density (wet basis)	12	lb/ft^3			
Usable Firebox Volume	1.94	ft^3			
Total Nom. Load Wt. Target	23.28	lb			
Total Load Wt. Allowable Range	22.12	to	24.44	lb	
Core Target Wt. Allowable Range	10.476	to	15.13	lb	
Remainder Load Wt. Allowable Range	8.15	to	12.80	lb	
					Mid-Point
Core Load Fuel Pc. Wt. Allowable Range	3.49	to	5.82	lb	4.66
Remainder Load Pc. Wt. Allowable Range	2.33	to	6.98	lb	4.66

	Pc. #		
Core Load Piece Wt. Actual	1	3.987	lb
	2	3.724	lb
	3	3.650	lb
Core Load Total. Wt. Actual		0.00	lb
	Pc. #		
Remainder Load Piece Wt.	1	6.326	lb
(2 or 3 Pcs.)	2	3.168	lb
	3	2.836	lb

Remainder Load Piece Weight Ratio - Small/Large				≤ 67%
Remainder Load Tot. Wt. Act			lb	
Total Load Wt. Actual			lb	
Core % of Total Wt.				45-65%
Remainder % of Total Wt.				35-55%
Actual Load % of Nominal Target				95-105%
Actual Fuel Load Density			lb/ft^3	
Allowable Charcoal Bed Wt. Range (lb)	0.1	to	-0.1	Mid-Point
Actual Charcoal Bed Wt.			lb	Out of Range 0.0
Actual Fuel Load Ending Wt.			lb	Valid Test ≥ 90%
Total Wt. of Fuel Burned During Test Run lb.		0.0	lb	

Cal. Block #: SBI-153 12%: 12.0

22%: 22.0

Wood moisture meter #: SBC-214

Room temp. (°F): 69.8 F

Room RH (%): 31.6

Ambiant hygrometer # : SBC.213

Fuel Piece Moisture Reading (%-dry basis)

1	2	3	min/maj > 40%	Lenght [in]	Squared
24.2	20.0	16.6	87%	16 1/4"	No
20.5	18.8	22.4	65%	15 1/2	No
22.7	22.7	17.0	77%	15 3/4	No
22.3	22.4	19.2	71%	16.0"	No
12.1	24.5	18.1	69%	16 1/4"	No
21.7	22.0	24.4	69%	15 3/4"	No

Signature:

intertek
Total Quality. Assured.

Date: 2021-11-02 Page 1 of 3

Manufacturer: Model: 2.5 R

Project #: Run: # 1 Engineer: Hussein Reviewer:

COMMENTS

@ 10:39 Kindling ignited (Total weight present is 8.80 lb) Air intake Fully open

@ 10:41 door closed Temperature: 74.3°F (average) weight 8.69 lb / Flue Temperature (150.3°F)

@ 10:43 picture of the burning taken.

@ 11:30 Door opened, ashes beaked and leveled. Door closed again.
Temp Flue (528.4°F)
Weight 2.51 lb. (picture taken)

@ 11:31 loading started (615.2°F) Weight 2.26lb

@ 11:33 Door closed Temp Flue (737°F)
weight 21.07 lb.

@ 11:35 8 (AM) Fan started.

@ 11:39 pump (3) stopped (after 1 hour from start of Test).
(probe #3).

@ 12:52 Temp F (437.2°F)
Weight (4.32lb)
High test Finished.
Fan stopped.

TEST LOAD CONFIGURATION

H.M

intertek
Total Quality. Assured.

Date: 2021-11-02 Page 2 of 3

Manufacturer: Model: 2.5 R

Project #: Run: #1 Engineer: Hussein Reviewer:

COMMENTS

@ 12:59 Door opened & ashes break applied. Door closed again.	Temp F 420.3 °F Weight 4.23 lb
@ 13:01 Door opened again & loading started For the Low Test. picture Taken.	Temp F 425.7 °F Weight 27.7 lb
@ 13:05 Door closed	Weight 26.35 lb Temp Flue 901.1 °F Temp Avg: 434.6 °F
@ 13:07 Air intake is at ½" of Rod. Dia	Weight 25.43 lb Temp Flue 721.8 °F
@ 13:11 Air intake completely closed.	Weight 24.31 lb. Temp F Flue 694.3 °F
@ 13:46 Fan is ON (started) Fan started 45 min from beginig rather than 30 min.	**TEST LOAD CONFIGURATION**

H.H

intertek
Total Quality. Assured.

Date: 2021-11-02 Page 3 of 3

Manufacturer: _____ Model: 25R

Project #: _____ Run: # 1 Engineer: Hossein Reviewer: _____

COMMENTS

@ 14:01 pump #3 stopped (probe #34) (after 1 hour of starting the test).

@ 20:08 Door opened picture taken / shovle used to move ashes around, door closed again in less than 30 seconds.

@ 20:33 Test stoped Weight 4.35 lb.
Temp Flue 176.2°F
Temp Aug 212.3°F.

H.M.

TEST LOAD CONFIGURATION

H.M

intertek
Total Quality. Assured.

Date: 2021-11-02 Page ____ of ____

Manufacturer: ____ Model: 25R

Project #: ____ Run: #1 Engineer: Hussein Reviewer: ____

SAMPLING EQUIPMENT CHECK OUT

Leakage Checks Tunnel Samplers (HIGH)

	Train 1 (A)		Train 2 (B)		Train 3 (C)	
Unplugged Flow Rate = cfm	Pre-Test	Post-Test	Pre-Test	Post-Test	Pre-Test	Post-Test
Vacuum (inches Hg.)	5	5	5	5	5	5
Final 1minute DGM (ft^3)	920.719	992.544	778.829	851.690	223.676	230.991
Initial 1minute DGM (ft^3) (A.H)	920.719	992.544	778.829	851.690	223.676	230.991
Change © (ft^3)	0	0	0	0	0	0
Allowable leakage .04 x Sample rate or .02cfm	0.004	0.004	0.004	0.004	0.004	0.004
Check OK	✓	✓	✓	✓	✓	✓

Leakage Checks Tunnel Samplers (LOW OR MEDIUM)

	Train 1 (D)		Train 2 (E)		Train 3 (F)	
Unplugged Flow Rate = cfm	Pre-Test	Post-Test	Pre-Test	Post-Test	Pre-Test	Post-Test
Vacuum (inches Hg.)	5	5	5	5	5	5
Final 1minute DGM (ft^3)	920.679	992.508	778.804	851.637	223.561	238.412
Initial 1minute DGM (ft^3)	920.679	992.508	778.804	851.637	223.561	238.412 (A.H)
Change © (ft^3)	0	0	0	0	0	0
Allowable leakage .04 x Sample rate or .02cfm	0.004	0.004	0.004	0.004	0.004	0.004
Check OK	✓	✓	✓	✓	✓	✓

Leakage Checks Flue Gas Sampler

Plugged Probe	Pre Test	Post Test
Check OK	OK	OK

A.H

192-N-0602

intertek
Total Quality. Assured.

Date: 2021-11-02 Page ____ of ____

Manufacturer: SBI Model: 2.5R

Project #: _____ Run: 1 Engineer: Hussein Reviewer: _____

CONTINUOUS ANALYZERS

Pre-Test (Adjust and Record) 6h50

	ZERO		SPAN		CAL. (Record Only)	
CO	0.0%	0.0%	1.98%	1.98%	2.98%	3.04%
CO_2	0.0%	0.0%	10.10%	10.1%	16.0%	16.3%
O_2	—	—	—	—	—	—
	Actual	Should Be	Actual	Should Be	Actual	Should Be

Post Test (Record Only) 7h10

	Zero	Span	Cal.	Zero Drift	Span Drift	Cal. Drift	OK?	Not OK*
CO	0.0%	1.96%	2.97%	0.0%	1.1%	2.3%		
CO_2	0.0%	10.07%	15.98%	0.0%	0.3%	2.0%		
O_2	—	—	—	—	—	—	—	—

- Greater than 5% of the range used.

intertek
Total Quality. Assured.

Date: 2021-11-02 Page ____ of ____

Manufacturer: _____ Model: 2.5R

Project #: _____ Run: #1 Tech: Hussein Reviewer: _____

PRETEST DILUTION TUNNEL TRAVERSE RUN

Barometric pressure (P_{bar}) 30.1 (inches Hg.) Static pressure (P_q) 0.172 (inches w.c.)
Inside diameter: Port A 8in. Port B 8in.
Tunnel cross sectional area: 0.349 Ft^2
Pitot tube type: S-Type

Traverse Point	Position (inches)	Velocity Head Δ_p (inches H_2O)	Tunnel Temperature (°F)
A- Centroid	4.00	0.091	68.3
B - Centroid	4.00	0.092	67.9
A-1	0.54	0.088	68.1
A-2	2.00	0.096	68.1
A-3	6.00	0.078	68.1
A-4	7.46	0.072	68.0
B-1	0.54	0.081	68.0
B-2	2.00	0.096	68.0
B-3	6.00	0.087	68.0
B-4	7.46	0.076	67.9 (H.H)
		AVERAGE	

$$v_s = K_p C_p (\sqrt{\Delta p})_{avg} \sqrt{\frac{(T_s)_{avg}}{P_s M_s}}$$

H.H

Where,
C_p = pitot tube coefficient, dimension less = 0.99 for standard pitot.
Δ_p = manometer reading (inches H_2O)
T_s = average absolute dilution tunnel temperature (°F + 460)
P_s = absolute dilution tunnel gas pressure or $P_{bar} + P_{qg}$
P_q = static pressure $\frac{\text{in. } H_2O}{\{\ 13.6\ \}}$
M_s = 28.56, wet molecular weight of stack gas (alternatively, it may be measured)
K_p = 85.49 pitot tube constant, (conversion factor for English units)

$\Delta_p$avg. = average of the square roots of the velocity heads (Δ_p) measured at each traverse point.

intertek
Total Quality. Assured.

Date: 2021-11-02 Page ____ of ____

Manufacturer: ____ Model: 2.5R Project #: ____

Category #: ____ Run: #1 Engineer: Hussain Reviewer: ____

RAW DRY GAS METER READINGS

	Start (HIGH)	End (HIGH)	Start (L/M)	End (L/M)
System 1 (ft^3) Equipment #: SBT-047	920.739	936.075	936.075	992.444
System 2 (ft^3) Equipment #: SBT-046	778.856	794.347	794.347	851.553
System 3 (ft^3) Equipment #: SBT-290	223.732	230.977	231.022	238.360

AMBIENT CONDITIONS

	Start (HIGH)	End (HIGH)	Start (L/M)	End (L/M)
	Date 2021-11-02 Time 10:36	Date 2021-11-02 Time 12:53	Date 2021-11-02 Time 12:59	Date 2021-11-02 Time 20:33
Barometer. (inches Hg) Equipment #: Meteo.gc.ca	30.1	30.0	30.0	30.0
Indoor Dry Bulb (°F)°F Equipment #: SBT-213	69.4 (H.M)	70.0	70.0	70.0
Indoor Humidity (%) Equipment #: SBT-213	32.3	~~31.7~~ 32.2 H.M	32.2	~~31.8~~ 32.2 H.M

H.M

Fuel load data - HIGH

Date: 3 Nov 2021

Run #: 2

Rev date: 11-01-2021

Doc rev: Rev 3

November 20 Adjunct to ASTM E XXXX Wood Heater Cordwood Test Method
Cordwood Fuel Load Calculators - 10 lb/ft³ Nominal Load Density
Core 45-65% of Total Load Weight, Remainder 35-55% of Total Load Weight
Values to be input manually

THIS DOCUMENT IS NOT AN ASTM STANDARD; IT IS UNDER CONSIDERATION WITHIN AN ASTM TECHNICAL COMMITTEE BUT HAS NOT RECEIVED ALL APPROVALS REQUIRED TO BECOME AN ASTM STANDARD. IT SHALL NOT BE REPRODUCED OR CIRCULATED OR QUOTED, IN WHOLE OR IN PART, OUTSIDE OF ASTM COMMITTEE ACTIVITIES EXCEPT WITH THE APPROVAL OF THE CHAIRMAN OF THE COMMITTEE HAVING JURISDICTION AND THE PRESIDENT OF THE SOCIETY. *COPYRIGHT ASTM, 100 BARR HARBOR DRIVE, WEST CONSHOHOCKEN, PA 19428. ALL RIGHTS RESERVED.*

For All Usable Firebox Volumes - High Fire Test Only

					Mid-Point
Nominal Required Load Density (wet basis)	10 lb/ft³				
Usable Firebox Volume	1.94 ft³				
Total Nom. Load Wt. Target	19.4 lb				
Total Load Wt. Allowable Range	18.40	to	20.40	lb	
Core Target Wt. Allowable Range	8.7	to	12.60	lb	
Remainder Load Wt. Allowable Range	6.80	to	10.70	lb	
Core Load Pc. Wt. Allowable Range	2.90	to	4.90	lb	3.90
Remainder Load Pc. Wt. Allowable Range	1.90	to	10.70	lb	6.30

	Pc. #		
Core Load Piece Wt. Actual	1	3.427	lb
	2	3.540	lb
	3	3.678	lb
Core Load Total Wt. Actual			lb
Remainder Load Piece Wt. (1 to 3 Pcs.)	1	5.228	lb
	2	3.207	lb
	3	—	lb
Remainder Load Piece Weight Ratio - Small/Large			≤ 67%
Remainder Load Tot. Wt. Act			lb
Total Load Wt. Actual			lb
Core % of Total Wt.			45-65%
Remainder % of Total Wt.			35-55%
Actual Load % of Nominal Target			95-105%
Actual Fuel Load Density			lb/ft³

Kindling and Start-up Fuel

Maximim Kindling Wt. (20% of Tot. Load Wt.)	0.00	lb
Actual Kindling Wt.	3.695	lb
Maximum Start-up Fuel Wt. (30% of Tot. Load Wt.)	0.00	lb
Actual Start-up Fuel Wt.	5.089	lb

Cal. Block #: SBI-153

12%: 12.0

22%: 22.0

Wood moisture meter #: SBi-214

Room temp. (°F): 69.6 °F

Room RH (%): 31.8%

Ambiant hygrometer # : SBi-213

Fuel Piece Moisture Reading (%-dry basis)

1	2	3	min/maj > 40%	Lenght [in]	Squared
19.9	18.0	18.4	73%	15 3/4"	No
22.3	21.9	24.8	89%	15 3/4"	No
16.6	26.3	16.1	86%	16 3/4"	No
31.6	17.2	17.9	68%	15 3/4"	No
21.5	16.6	17.9	75%	16"	No
—	—	—	—	—	—

Kindling Moisture (%-dry basis)

20.6	18.6	18.9	—	16"	—

(H.M) For start-up Fuel

Start-up Fuel Moisture Readings (%-dry basis)

10	10	10	—	16"	—

H.M (This is For Kindling Moisture)

Signature: H.M

Fuel load data - MEDIUM

Date: 2021-11-03

Run #: 2

Rev date: 11-01-2021

Doc rev: Rev 3

November 20, 2015 Adjunct to ASTM E XXXX Wood Heater Cordwood Test Method
Cordwood Fuel Load Calculators - 12 lb/ft³ Nominal Load Density
Core 45-65% of Total Load Weight, Remainder 35-55% of Total Load Weight
Values to be input manually

THIS DOCUMENT IS NOT AN ASTM STANDARD; IT IS UNDER CONSIDERATION WITHIN AN ASTM TECHNICAL COMMITTEE BUT HAS NOT RECEIVED ALL APPROVALS REQUIRED TO BECOME AN ASTM STANDARD. IT SHALL NOT BE REPRODUCED OR CIRCULATED OR QUOTED, IN WHOLE OR IN PART, OUTSIDE OF ASTM COMMITTEE ACTIVITIES EXCEPT WITH THE APPROVAL OF THE CHAIRMAN OF THE COMMITTEE HAVING JURISDICTION AND THE PRESIDENT OF THE SOCIETY. *COPYRIGHT ASTM, 100 BARR HARBOR DRIVE, WEST CONSHOHOCKEN, PA 19428. ALL RIGHTS RESERVED.*

For Usable Firebox Volumes up to 3.0 ft³ - Low and Medium Fire

Nominal Required Load Density (wet basis)	12	lb/ft³			
Usable Firebox Volume	1.94	ft³			
Total Nom. Load Wt. Target	23.28	lb			
Total Load Wt. Allowable Range	22.12	to	24.44	lb	
Core Target Wt. Allowable Range	10.476	to	15.13	lb	
Remainder Load Wt. Allowable Range	8.15	to	12.80	lb	
					Mid-Point
Core Load Fuel Pc. Wt. Allowable Range	3.49	to	5.82	lb	4.66
Remainder Load Pc. Wt. Allowable Range	2.33	to	6.98	lb	4.66

	Pc. #		
Core Load Piece Wt. Actual	1	3.926	lb
	2	3.568	lb
	3	3.509	lb
Core Load Total. Wt. Actual			lb
	Pc. #		
Remainder Load Piece Wt.	1	6.301	lb
(2 or 3 Pcs.)	2	3.498	lb
	3	2.608	lb

Remainder Load Piece Weight Ratio - Small/Large			≤ 67%
Remainder Load Tot. Wt. Act		lb	
Total Load Wt. Actual		lb	
Core % of Total Wt.			45-65%
Remainder % of Total Wt.			35-55%
Actual Load % of Nominal Target			95-105%
Actual Fuel Load Density		lb/ft³	

Allowable Charcoal Bed Wt. Range (lb)	0.1	to	-0.1		Mid-Point
Actual Charcoal Bed Wt.			lb	Out of Range	0.0
Actual Fuel Load Ending Wt.			lb	Valid Test	≥ 90%
Total Wt. of Fuel Burned During Test Run lb.		0.0	lb		

Cal. Block #: SBI-153

12%: 12.0

22%: 22.0

Wood moisture meter #: SBI-214 / SBI-229

Room temp. (°F): 70.4

Room RH (%): 28.7

Ambiant hygrometer # : SBI-213

Fuel Piece Moisture Reading (%-dry basis)

1	2	3	min/maj > 40%	Lenght [in]	Squared
28.2	21.9	17.0	93%	15 ½"	No
21.3	22.1	15.0	67%	16 ¼"	No
22.1	13.4	19.3	69%	15 ¾"	No
23.3	17.2	16.1	76%	15 ¾"	No
19.9	18.7	17.1	75%	15 ¾"	No
~~24.2~~	~~14.2~~	~~14.8~~	79%	16 ¼"	No
23.8	18.8	19.5			

H.M

Signature: H.M

intertek
Total Quality. Assured.

Date: 2021-11-03 Page 1 of 3

Manufacturer: _____ Model: 2.5 R

Project #: _____ Run: # 2 Engineer: Hussein Reviewer: _____

COMMENTS

@ 10:12 Kindling ignited. Air intake completely open (High Test starts). Weight 8.88 lb, Temp Flue 84.9 °F, Temp Avg 73.2 °F

@ 10:14 Door closed pictures taken. Weight 8.62, Temp Flue 172 °F

@ 10:32 system stopped by itself due to a small error, it was fixed and turned back on 1 minute after. (1 min of data lost). sampling rate was increased inorder to compensate the 1 minute lst in the next 10 minutes.

@ 10:49 Door opened, ashes broken or distributed. Then door closed back quickly. Weight 2.58 lb (H.K) ~~2.6 lb~~, Temp Flue 495.7 °F

@ 10:50 Door opened & loading started. Weight 2.35 lb, Temp Flue 546.6 °F

@ 10:52 Door closed Weight 20.8 lb, Temp Flue 630.4 °F

TEST LOAD CONFIGURATION

H.K

192-K-0602

intertek
Total Quality. Assured.

Date: 2021-11-03 Page 2 of 3

Manufacturer: Model: 25R

Project #: Run: # 2 Engineer: Hossein Reviewer:

COMMENTS

@ 11:03 Fan is ON (Fan started).

@ 11:12 pump # 3 stopped (probe # 11)
(1 hour after the start of test)

@ 11:59 High Test Finished Weight ~~4.480~~ 4.40 lb (H.M)*
Fan stopped Temp Flue 509 °F

@ 12:14 picture taken Weight 3.91 lb
Door open & ashes are Temp Flue 451.1 °F
moved around, another
picture taken then Door closed again (@ 12:16)

@ 12:16 Door opened and loading started (H.M)*
weight ~~3.91 lb~~ 3.93 lb
Temp Flue ~~451.1 °F~~ 448 °F
picture taken
~~448~~ (H.M)*

@ 12:19 Door closed
(H.M)* 26.04
Weight ~~3.93~~ lb
Temp Flue 904.9 °F

@ 12:21 Air intake at
1/2" of Rod Dia

TEST LOAD CONFIGURATION

H.M

192-K-0602

intertek
Total Quality. Assured.

Date: 2024-11-03

Manufacturer: _____

Model: 2.5 R

Project #: _____

Run: # 2

Engineer: Hussein

Reviewer: _____

COMMENTS

@ 12:23 air intake placed on 3/8" From rod Dia
Weight 25.52 lb (11.4)
Temp Flue 716 °F

23.74 lb

@ 12:28 Air intake closed completely Weight ~~25.5~~
Temp Flue 666.4 °F

@ 12:46 Fan is ON (Fan started)
(30 minutes into start of test)

@ 13:16 pump # 3 is turned OFF
(probe # 62) (1 hour From start of test)

@ 20:17 Door opened to move ashes abt to front
then closed ~~door~~ door back (process took
(11.4) ~~acc~~ 20 seconds)
(11.4)

@ 20:26 Test Finished
(stopped)

Weight (4.28 - 3.86)
≈ 0.42 lb of
Dry Fuel unburned

TEST LOAD CONFIGURATION

H M

192-K-0602

intertek
Total Quality. Assured.

Date: 2021-11-03 Page ____ of ____

Manufacturer: _____ Model: 2.5 R

Project #: _____ Run: #2 Engineer: Hussein Reviewer: _____

SAMPLING EQUIPMENT CHECK OUT

Leakage Checks Tunnel Samplers (HIGH)

	A Train 1		B Train 2		C Train 3	
Unplugged Flow Rate = cfm	Pre-Test	Post-Test	Pre-Test	Post-Test	Pre-Test	Post-Test
Vacuum (inches Hg.)	5	5	5	5	5	5
Final 1minute DGM (ft^3)	992.590	67.399	851.786	927.694	238.497	245.880
Initial 1minute DGM (ft^3)	992.590	67.399	851.785	927.693	238.496	245.879
Change © (ft^3)	Ø	Ø	0.001	0.001	0.001	0.001
Allowable leakage .04 x Sample rate or .02cfm	0.004	0.004	0.004	0.004	0.004	0.004
Check OK	✓	✓	✓	✓	✓	✓

Leakage Checks Tunnel Samplers (LOW OR MEDIUM)

	D Train 1		E Train 2		F Train 3	
Unplugged Flow Rate = cfm	Pre-Test	Post-Test	Pre-Test	Post-Test	Pre-Test	Post-Test
Vacuum (inches Hg.)	5	5	5	5	5	5
Final 1minute DGM (ft^3)	992.563	67.338	851.732	927.679	238.430	253.335
Initial 1minute DGM (ft^3)	992.563	67.338	851.732	927.679	238.430	253.334
Change © (ft^3)	Ø	Ø	Ø	Ø	Ø	0.001
Allowable leakage .04 x Sample rate or .02cfm	0.004	0.004	0.004	0.004	0.004	0.004
Check OK	✓	✓	✓	✓	✓	✓

Leakage Checks Flue Gas Sampler

Plugged Probe	Pre Test	Post Test
Check OK	OK	OK

HM

192-N-0602

intertek
Total Quality. Assured.

Date: 2021-11-03 Page ____ of ____

Manufacturer: SBI Model: 2.5R

Project #: _____ Run: 2 Engineer: Hussein Reviewer: _____

CONTINUOUS ANALYZERS

Pre-Test (Adjust and Record)

	ZERO		SPAN		CAL. (Record Only)	
CO	0.0%	0.0%	1.98%	1.98%	2.97%	3.04%
CO_2	0.0%	0.0%	10.10%	10.1%	17.95%	18.0%
O_2	—	—	—	—	—	—
	Actual	Should Be	Actual	Should Be	Actual	Should Be

Post Test (Record Only)

	Zero	Span	Cal.	Zero Drift	Span Drift	Cal. Drift	OK?	Not OK*
CO	0.0%	2.01%	2.95%	0.0%	1.5%	3.0%	✓	
CO_2	0.0%	9.95%	17.76%	0.0%	1.5%	1.3%	✓	
O_2	—	—	—	—	—	—	—	—

- Greater than 5% of the range used.

intertek
Total Quality. Assured.

Date: 2021-11-03 Page ____ of ____

Manufacturer: _____ Model: 2.5 R

Project #: _____ Run: # 2 Tech: Hussein Reviewer: _____

PRETEST DILUTION TUNNEL TRAVERSE RUN

Barometric pressure (P_{bar}) 30.2 (inches Hg.) Static pressure (P_q) 0.172 (inches w.c.)
Inside diameter: Port A 8in. Port B 8in.
Tunnel cross sectional area: 0.349 Ft^2
Pitot tube type: S-Type

Traverse Point	Position (inches)	Velocity Head Δ_p (inches H_2O)	Tunnel Temperature (°F)
A- Centroid	4.00	0.097	68.9
B - Centroid	4.00	0.098	69.1
A-1	0.54	0.088	69.0
A-2	2.00	0.098	68.9
A-3	6.00	0.084	69.0
A-4	7.46	0.072	68.9
B-1	0.54	0.082	69.1
B-2	2.00	0.092	69.1
B-3	6.00	0.092	69.1
B-4	7.46	0.072	69.1
		AVERAGE	

H.H

$$v_s = K_p C_p (\sqrt{\Delta p})_{avg} \sqrt{\frac{(T_s)_{avg}}{P_s M_s}}$$

Where,
C_p = pitot tube coefficient, dimension less = 0.99 for standard pitot.
Δ_p = manometer reading (inches H_2O)
T_s = average absolute dilution tunnel temperature (°F + 460)
P_s = absolute dilution tunnel gas pressure or $P_{bar} + P_{qg}$
P_q = static pressure $\frac{\text{in. } H_2O}{\{\ 13.6\ \}}$
M_s = 28.56, wet molecular weight of stack gas (alternatively, it may be measured)
K_p = 85.49 pitot tube constant, (conversion factor for English units)

$\Delta_p$avg. = average of the square roots of the velocity heads (Δ_p) measured at each traverse point.

intertek
Total Quality. Assured.

Date: 2021-11-03 Page ____ of ____

Manufacturer: ____ Model: 2.5 R Project #: ____

Category #: ____ Run: # 2 Engineer: Hossain Reviewer: ____

RAW DRY GAS METER READINGS

	Start (HIGH)	End (HIGH)	Start (L/M)	End (L/M)
System 1 (ft^3) Equipment #: SBI-047	992.604	1005.212 (HM)	1005.266	067.323
System 2 (ft^3) Equipment #: SBI-046	851.801	864.533	~~005.7~~ 864.581 (HM)	927.659
System 3 (ft^3) Equipment #: SBI-290	238.510	245.868	245.896	253.320

AMBIENT CONDITIONS

	Start (HIGH)	End (HIGH)	Start (L/M)	End (L/M)
	Date 2021-11-03 Time 9:50	Date 2021-11-03 Time 11:59	Date 2021-11-03 Time 12:02	Date 2021-11-03 Time HM 20:27
Barometer. (inches Hg) Equipment #: Meteo.gc.ca	30.2	30.2	30.2	30.2
Indoor Dry Bulb (EF)°F Equipment #: SBI-213	69.5	70.8	70.8	70.2
Indoor Humidity (%) Equipment #: SBI-213	31.3	29.1	29.1	25.1

H.M

Fuel load data - HIGH

Date: 2021-11-04

Run #: 3

Rev date: 11-01-2021

Doc rev: Rev 3

November 20 Adjunct to ASTM E XXXX Wood Heater Cordwood Test Method
Cordwood Fuel Load Calculators - 10 lb/ft³ Nominal Load Density
Core 45-65% of Total Load Weight, Remainder 35-55% of Total Load Weight
Values to be input manually

THIS DOCUMENT IS NOT AN ASTM STANDARD; IT IS UNDER CONSIDERATION WITHIN AN ASTM TECHNICAL COMMITTEE BUT HAS NOT RECEIVED ALL APPROVALS REQUIRED TO BECOME AN ASTM STANDARD. IT SHALL NOT BE REPRODUCED OR CIRCULATED OR QUOTED, IN WHOLE OR IN PART, OUTSIDE OF ASTM COMMITTEE ACTIVITIES EXCEPT WITH THE APPROVAL OF THE CHAIRMAN OF THE COMMITTEE HAVING JURISDICTION AND THE PRESIDENT OF THE SOCIETY. *COPYRIGHT ASTM, 100 BARR HARBOR DRIVE, WEST CONSHOHOCKEN, PA 19428. ALL RIGHTS RESERVED.*

For All Usable Firebox Volumes - High Fire Test Only

Nominal Required Load Density (wet basis)	10	lb/ft³			
Usable Firebox Volume	1.94	ft³			
Total Nom. Load Wt. Target	19.4	lb			
Total Load Wt. Allowable Range	18.40	to	20.40	lb	
Core Target Wt. Allowable Range	8.7	to	12.60	lb	
Remainder Load Wt. Allowable Range	6.80	to	10.70	lb	
					Mid-Point
Core Load Pc. Wt. Allowable Range	2.90	to	4.90	lb	3.90
Remainder Load Pc. Wt. Allowable Range	1.90	to	10.70	lb	6.30

	Pc. #			
Core Load Piece Wt. Actual	1	3.763	lb	
	2	3.600	lb	
	3	3.622	lb	
Core Load Total. Wt. Actual			lb	
	Pc. #			
Remainder Load Piece Wt.	1	5.070	lb	
(1 to 3 Pcs.)	2	3.321	lb	
	3	/	lb	
Remainder Load Piece Weight Ratio - Small/Large				≤ 67%
Remainder Load Tot. Wt. Act			lb	
Total Load Wt. Actual			lb	
Core % of Total Wt.				45-65%
Remainder % of Total Wt.				35-55%
Actual Load % of Nominal Target				95-105%
Actual Fuel Load Density			lb/ft³	

Kindling and Start-up Fuel		
Maximim Kindling Wt. (20% of Tot. Load Wt.)	0.00	lb
Actual Kindling Wt.	3.610	lb
Maximum Start-up Fuel Wt. (30% of Tot. Load Wt.)	0.00	lb
Actual Start-up Fuel Wt.	~~6.262~~ 5.563 (H.M)	lb

Cal. Block #: SBI-153

12%: 12.0

22%: 22.0

Wood moisture meter #: SBI - 329

Room temp. (°F): 67.2

Room RH (%): 26.X4 11.M

Ambiant hygrometer # : SBI - 213

Fuel Piece Moisture Reading (%-dry basis)

1	2	3	min/maj > 40%	Lenght [in]	Squared
25.4	17.7	18.6	87%	15 3/4"	No
20.6	18.6	26.6	76%	15 3/4"	No
18.7	22.0	17.5	67%	15 3/4"	No
24.8	26.5	15.8	58%	16 1/4"	No
14.8	17.7	28.0	85%	15 3/4"	No
/	/	/	/	/	/

Kindling Moisture (%-dry basis)

10	10	10	/	16"	/

Start-up Fuel Moisture Readings (%-dry basis)

~~17.9~~ 19.2	20.9 17.9	19.5 21.1	/	16"	/

Signature: M.M

Fuel load data - MEDIUM

Date: 2021-11-04

Run #: # 3

Rev date: 11-01-2021

Doc rev: Rev 3

November 20, 2015 Adjunct to ASTM E XXXX Wood Heater Cordwood Test Method
Cordwood Fuel Load Calculators - 12 lb/ft³ Nominal Load Density
Core 45-65% of Total Load Weight, Remainder 35-55% of Total Load Weight
Values to be input manually

THIS DOCUMENT IS NOT AN ASTM STANDARD; IT IS UNDER CONSIDERATION WITHIN AN ASTM TECHNICAL COMMITTEE BUT HAS NOT RECEIVED ALL APPROVALS REQUIRED TO BECOME AN ASTM STANDARD. IT SHALL NOT BE REPRODUCED OR CIRCULATED OR QUOTED, IN WHOLE OR IN PART, OUTSIDE OF ASTM COMMITTEE ACTIVITIES EXCEPT WITH THE APPROVAL OF THE CHAIRMAN OF THE COMMITTEE HAVING JURISDICTION AND THE PRESIDENT OF THE SOCIETY. *COPYRIGHT ASTM, 100 BARR HARBOR DRIVE, WEST CONSHOHOCKEN, PA 19428. ALL RIGHTS RESERVED.*

For Usable Firebox Volumes up to 3.0 ft³ - Low and Medium Fire

Nominal Required Load Density (wet basis)	12	lb/ft³			
Usable Firebox Volume	1.94	ft³			
Total Nom. Load Wt. Target	23.28	lb			
Total Load Wt. Allowable Range	22.12	to	24.44	lb	
Core Target Wt. Allowable Range	10.476	to	15.13	lb	
Remainder Load Wt. Allowable Range	8.15	to	12.80	lb	
					Mid-Point
Core Load Fuel Pc. Wt. Allowable Range	3.49	to	5.82	lb	4.66
Remainder Load Pc. Wt. Allowable Range	2.33	to	6.98	lb	4.66

	Pc. #		
Core Load Piece Wt. Actual	1	3.732	lb
	2	3.587	lb
	3	3.526	lb
Core Load Total. Wt. Actual			lb
	Pc. #		
Remainder Load Piece Wt.	1	5.851	lb
(2 or 3 Pcs.)	2	3.335	lb
	3	2.585	lb

Remainder Load Piece Weight Ratio - Small/Large			≤ 67%
Remainder Load Tot. Wt. Act		lb	
Total Load Wt. Actual		lb	
Core % of Total Wt.			45-65%
Remainder % of Total Wt.			35-55%
Actual Load % of Nominal Target			95-105%
Actual Fuel Load Density		lb/ft³	

Allowable Charcoal Bed Wt. Range (lb)	0.1	to	-0.1		Mid-Point
Actual Charcoal Bed Wt.			lb	Out of Range	0.0
Actual Fuel Load Ending Wt.			lb	Valid Test	≥ 90%
Total Wt. of Fuel Burned During Test Run lb.		0.0	lb		

Cal. Block #: SBI-153

12%: 12.0

22%: 22.0

Wood moisture meter #: SBI-229

Room temp. (°F): 69.4

Room RH (%): 25.3

Ambiant hygrometer #: SBI-213

Fuel Piece Moisture Reading (%-dry basis)

1	2	3
18.6	23.8	17.9
21.2	21.9	14.3
26.0	18.7	16.1
26.5	18.7	15.4
25.7	16.6	19.9
25.9	16.4	15.9

min/maj > 40%	Lenght [in]	Squared
67%	16"	No
67%	15½"	No
73% (H.H)	~~62~~ 15¾"	No
67%	15¾"	No
62%	15½"	No
77%	16"	No

Signature: _____

intertek
Total Quality. Assured.

Date: 2021-11-04 Page 1 of ____

Manufacturer: ____ Model: 25R

Project #: ____ Run: #3 Engineer: Hosein Reviewer: ____

COMMENTS

@ 10:20	Kindling ignited Air intake completely open picture taken High Test starts.	Weight 9.28 lb Temp Flue 83.8 °F Temp Avg 66.8 °F
@ 10:22	Door closed	Weight 9.06 lb Temp Flue 169.3 °F
@ 11:02	picture of Fuel load Taken.	
@ 11:04	Door opened & ashes are broken down picture taken taken the door closed (process 15 seconds)	Weight 2.56 lb Temp Flue 518.5 °F
@ 11:05	Loading started pictured taken	Wei (H.M) Weight 2.26 lb. Temp Flue 592.3 °F
@ 11:07	Door closed Weight 2.26 lb. Temp Flue 644.2°F	
@ 11:09	Fan is ON ~~Note(kindling wit~~ (H.M)	

TEST LOAD CONFIGURATION

H.M

intertek
Total Quality. Assured.

Date: 2021-11-04 Page 2 of ____

Manufacturer: _____ Model: 2.5R

Project #: _____ Run: #3 Engineer: Hussein Reviewer: _____

COMMENTS

@ 11:20 pump #3 stoped (prob #55)
(1 hour from start of test)

Note* (High Test ends when Weight reaches
2.1 lb + 2.26 lb (= 4.36 lb)

@ 12:22 High Test Finished Weight 4.35 lb
Fan stopped Temp Flue 497.4 °F

@ 12:36 Door opened Weight 3.86 lb
(Medium Test) Ashes are moved around Temp Flue 455.4 °F
picture taken
Door ~~semi~~-(HH) closed again.

@ 12:37 Door opened & load started Wgt 3.85 lb
picture taken. Temp Flue 438.4 °F

@ 12:41 Door closed
Weight 25.31 lb
Temp Flue 900.7 °F

@ 12:44 air intake at 1/2" of Rod

@ 12:48 air intake at 3/4" of Rod
Weight 23.04 lb
Temp Flue 620.8 °F

TEST LOAD CONFIGURATION

HH

intertek
Total Quality. Assured.

Date: 2021-11-04 Page 3 of ____

Manufacturer: ____ Model: 25R

Project #: ____ Run: # 3 Engineer: Hussein Reviewer: ____

COMMENTS

~~@ 13:37 (H.M) Fan is turned ON~~ (H.M)

@ 13:37 Fan is turned on
pump # 3 stoped (probe # 36)
(1 hour after the start of Medium test).

@ 18:24 Door opened
Ashes are beaten down
then (H.M) door close again
(process took 24 seconds)

@ 18:33 Test stoped (Weight.
L= 5.03 lb - 3.86 lb
= 1.17 lb. Dry fuel unburned).

TEST LOAD CONFIGURATION

H M

intertek
Total Quality. Assured.

Date: 2021-11-04 Page ____ of ____

Manufacturer: ____ Model: 2.5R

Project #: ____ Run: #3 Engineer: Hussein Reviewer: ____

SAMPLING EQUIPMENT CHECK OUT

Leakage Checks Tunnel Samplers (HIGH)

	A Train 1		B Train 2		C Train 3	
Unplugged Flow Rate = cfm	Pre-Test	Post-Test	Pre-Test	Post-Test	Pre-Test	Post-Test
Vacuum (inches Hg.)	5	5	5	5	5	5
Final 1minute DGM (ft^3)	67.518	126.102	927.753	987.018	253.413	260.661
Initial 1minute DGM (ft^3)	67.518	126.102	927.752	986.018 (HM)	253.413	260.660
Change © (ft^3)	0	0	0.001	1	0	0.001
Allowable leakage .04 x Sample rate or .02cfm	0.004	0.004	0.004	0.004	0.004	0.004
Check OK	✓	✓	✓	✓	✓	✓

Leakage Checks Tunnel Samplers (LOW OR MEDIUM)

	D Train 1		E Train 2		F Train 3	
Unplugged Flow Rate = cfm	Pre-Test	Post-Test	Pre-Test	Post-Test	Pre-Test	Post-Test
Vacuum (inches Hg.)	5	5	5	5	5	5
Final 1minute DGM (ft^3)	67.498	126.047	927.736	986.990	253.372	268.149
Initial 1minute DGM (ft^3)	67.498	126.084 (HM) 126.047	927.736	986.988	253.364 (HM) 253.372	268.148
Change © (ft^3)	0	0	0	0.002	0	0.001
Allowable leakage .04 x Sample rate or .02cfm	0.004	0.004	0.004	0.004	0.004	0.004
Check OK	✓	✓	✓	✓	✓	✓

Leakage Checks Flue Gas Sampler

Plugged Probe	Pre Test	Post Test
Check OK	OK	

HM

intertek
Total Quality. Assured.

Date: 2021-11-04 Page ____ of ____

Manufacturer: SBI Model: 2.5R

Project #: ____ Run: #3 Engineer: Hussein Reviewer: ____

CONTINUOUS ANALYZERS

Pre-Test (Adjust and Record)

	ZERO		SPAN		CAL. (Record Only)	
CO	0.0%	0.0%	1.98%	1.98%	2.98%	3.04%
CO_2	0.0%	0.0%	10.10%	10.1%	18.17%	18.0%
O_2	—	—	—	—	—	—
	Actual	Should Be	Actual	Should Be	Actual	Should Be

Post Test (Record Only)

	Zero	Span	Cal.	Zero Drift	Span Drift	Cal. Drift	OK?	Not OK*
CO	0.0%	2.02%	2.97%	0.0%	2.0%	2.3%	✓	
CO_2	0.0%	9.98%	17.83%	0.0%	1.2%	1.0%	✓	
O_2	—	—	—	—	—	—	—	—

- Greater than 5% of the range used.

intertek
Total Quality. Assured.

Date: 2021-11-04 Page ____ of ____

Manufacturer: _____ Model: 2.57

Project #: _____ Run: #3 Tech: Hossein Reviewer: _____

PRETEST DILUTION TUNNEL TRAVERSE RUN

Barometric pressure (P_{bar}) 30.3 (inches Hg.) Static pressure (P_q) 0.175 (inches w.c.)
Inside diameter: Port A 8in. Port B 8in.
Tunnel cross sectional area: 0.349 Ft^2
Pitot tube type: S-Type

Traverse Point	Position (inches)	Velocity Head Δ_p (inches H_2O)	Tunnel Temperature (°F)
A- Centroid	4.00	0.098	66.6
B - Centroid	4.00	0.098	66.8
A-1	0.54	0.090	66.7
A-2	2.00	0.100	66.6
A-3	6.00	0.84	66.6
A-4	7.46	0.074	66.6
B-1	0.54	0.088	66.8
B-2	2.00	0.095	66.7
B-3	6.00	0.83	66.8
B-4	7.46	0.073	66.7
		AVERAGE	

$$v_s = K_p C_p (\sqrt{\Delta p})_{avg} \sqrt{\frac{(T_s)_{avg}}{P_s M_s}}$$

A.M

Where,
C_p = pitot tube coefficient, dimension less = 0.99 for standard pitot.
Δ_p = manometer reading (inches H_2O)
T_s = average absolute dilution tunnel temperature (°F + 460)
P_s = absolute dilution tunnel gas pressure or $P_{bar} + P_{qg}$
P_q = static pressure $\frac{\text{in. } H_2O}{\{\ 13.6\ \}}$
M_s = 28.56, wet molecular weight of stack gas (alternatively, it may be measured)
K_p = 85.49 pitot tube constant, (conversion factor for English units)

$\Delta_p$avg. = average of the square roots of the velocity heads (Δ_p) measured at each traverse point.

intertek
Total Quality. Assured.

Date: 2021-11-04 Page ____ of ____

Manufacturer: _____ Model: 2.5R Project #: _____

Category #: _____ Run: #3 Engineer: Hussain Reviewer: _____

RAW DRY GAS METER READINGS

(H.M) (H.M)

	Start (HIGH)	End (HIGH)	Start (L/M)	End (L/M)
System 1 (ft^3) Equipment #: SBI-047	67.558	~~82.672~~ 81.672	81.742	~~1286~~.009
System 2 (ft^3) Equipment #: SBI-046	927.779	942.036	942.108	986.965
System 3 (ft^3) Equipment #: SBI-290	253.432	260.644	260.679	268.128

AMBIENT CONDITIONS

	Start (HIGH)	End (HIGH)	Start (L/M)	End (L/M)
	Date 2021-11-04 Time 10:15	Date 2021-11-04 Time 12:24	Date 2021-11-04 Time 12:33	Date 2021-11-04 Time 18:37
Barometer. (inches Hg) Equipment #: Meteo.gc.ca	30.3	30.3	30.3	30.3
Indoor Dry Bulb (EF)°F Equipment #: SBI-213	~~26.9~~ 68.0 (H.M)	69.3	69.3	70.1
Indoor Humidity (%) Equipment #: SBI-213	26.9 ~~67.0~~ (H.M)	27.1	27.1	25.1

H.M

192-T-0603

Fabricant de poêles international inc.
Stove Builder International Inc.

Test load procedure for certification of 2.5R Series wood fireplace using ASTM E3053-17 according to EPA Alt-125

Fuel Specie: Beech
Fuel length: 16 inches

High Fire

Stove lighting: 9.6 lbs

Split the start-up fuel log into 10 pieces. Crisscross all pieces on the brick, leaving some space between each wood pieces (2 in the bottom, 4 on the middle, 4 on the top). Crisscross the kindling on the top of the start-up fuel. The kindling is made of between 10-12 finely split piece of wood that are 10% of moisture content. Place crumbled newspaper on top of the kindling (5 full sheets). Light up the paper and let the door ajar at 90° until the flue temperature reaches 150°F, then close the door. The fan is always OFF.

High Fire load: 19 lbs

When there is coal bed of 2.5 lbs left, break ashes and level coal bed, then add high fire load. Place the 2 smallest pieces in the bottom in a reverse V shape, then put the 2 medium size pieces in an East-West orientation in the back (over the reverse V) and put the biggest size remaining pieces in the front. Leave one inch or air space between the rear bricks and the medium piece, the distance between the two medium pieces and the medium and big pieces will be adjusted to respect maximum loading volume. Fully open the door for 1 to 2.5 minutes. Flue temperature shall be around 575°F ± 50. Close the door and let burn until the weight is down to target. Start the fan at 5 minutes after loading. Stop the sampling when 90% of the test fuel is consumed.

Low Fire

Low preparation after high

When the average stove temperature gets to 460°F, slightly level the coal bed. Let the door ajar by one inch for one minute. There should be approximately 4.2 lb of coal bed.

Low Fire Loading: 23.5 lbs

Place the 2 smallest pieces in the bottom in a reverse V shape, then put the 2 medium size pieces in an East-West orientation in the back (over the reverse V). Then put the biggest piece over the reverse V shape in the front in an East-West orientation and put the remaining medium size piece over the 2 mediums pieces in the back. Leave one inch or air space between the rear bricks and the medium piece, another one inch between all the pieces. Let the door ajar until the flue temperature reaches 900°F and then close the door with the primary air control open. When the flue temperature stops decreasing and starts increasing again and the oxygen falls below 9%, close the primary air control using a ½" outside diameter rod. Close the primary air control completely when 15% of the load weight has been consumed (approx. 10-11 minutes). Start the fan at 30 minutes from the beginning of sampling.

Guillaume Thibodeau-Fortin
2021-11-01

Fabricant de poêles international inc.
Stove Builder International Inc.

Medium burn rate

Medium preparation after high

When the average stove temperature gets to 440°F, slightly level the coal bed. Let the door ajar by one inch for one minute. There should be approximately 4.0 lb of coal bed.

Loading: 23.5 lbs

Place the 2 smallest pieces in the bottom in a reverse V shape, then put the 2 medium size pieces in an East-West orientation in the back (over the reverse V). Then put the biggest piece over the reverse V shape in the front in an East-West orientation and put the remaining medium size piece over the 2 mediums pieces in the back. Leave one inch or air space between the rear bricks and the medium piece, another one inch between all the pieces. Let the door ajar until the flue temperature reaches 900°F and then close the door with the primary air control open. When the flue temperature stops decreasing and starts increasing again and the oxygen falls below 9%, close the primary air control using a ½" outside diameter rod. Close the primary air control on a rod of 3/8" of outside diameter when 15% of the load weight has been consumed (approx. 10-11 minutes). Remove the rod. Start the fan at 30 minutes from beginning of sampling.

Guillaume Thibodeau-Fortin
2021-11-01

Ambient	Flue	Dilution Tunnel	Firebox Top	Firebox Back	Firebox Right	Firebox Left	Firebox Bottom	DGM Inlet 1	DGM Outlet 1	Probe Temp 1	DGM inlet 2	DGM outlet 2	Probe Temp 2	Probe Temp 3	Manometer Dra	Manometer Tu	Transmetteur	Transmetteur	Transmetteur	Transmetteur	Massflow 1	Massflow 2	Balance	Weight for BR	Date	
70.1864928	71.5807546	69.5219315	71.7039772	73.4615839	73.7606074	73.6416688	72.1643311	68.5148978	68.5620089	81.7160416	68.5782683	68.75753	80.5993134	84.1927871	70.0123524	0.001837506	0.09350191	0.37298756	0.13275494	-0.04494768	-0.05738184	0.00971556	0.20302774	8.84659529		10:39:32
70.3126457	127.830209	77.0513976	73.3804091	73.4049492	73.7222793	73.6099626	72.1442851	68.8237423	68.6169711	82.4323413	68.7720514	68.8070679	81.5416022	84.8176043	70.0706995	0.020566623	0.09456078	0.73199334	0.14625493	-0.03689765	0.36873894	3.32284858	3.61122853	8.75924617		10:40:33
70.3941608	158.36723	81.1408982	78.2295671	73.3869935	73.9924443	73.7055155	72.1495664	68.8473736	68.6089206	82.9885586	68.7923468	68.837786	81.8139986	85.1540269	70.1171399	0.024295384	0.09553758	0.75925787	0.14565317	0.01731187	0.29375868	3.47850016	3.57043064	8.68752613		10:41:33
70.5756462	176.861755	75.813565	85.3126528	73.3959654	74.8699038	74.0838001	72.1502786	68.9072792	68.6167213	83.4411782	68.8030664	68.8397499	81.8366567	85.2295612	70.0836914	0.031290977	0.09357474	0.76212962	0.1489572	-0.02405619	0.37104765	3.49506354	3.50943869	8.5492575		10:42:33
70.9737406	218.01819	78.8545732	96.5194489	73.3717792	76.4631371	74.7476569	72.0399363	68.8847203	68.5691451	83.6318764	68.8159398	68.803434	81.8175573	84.9599563	70.033232	0.004026771	0.09317488	0.7524645	0.13552533	-0.02022986	0.29559286	3.49031171	3.4754186	8.42895372		10:43:33
70.972144	256.5864	80.3236495	114.860766	73.4134543	79.0147406	75.6810589	72.0121189	68.9285577	68.574634	83.8090208	68.8080886	68.7880792	81.9352385	84.8850549	69.9841397	0.039327768	0.09287558	0.77501317	0.13256192	-0.02071809	0.37821228	3.47464821	3.46209462	8.31780036		10:44:33
71.2047037	258.251277	80.7490476	134.684738	73.5203148	82.3611068	76.9571289	71.9786107	68.9208438	68.588181	84.0111045	68.8316386	68.8312217	82.0199209	84.9433355	69.948932	0.041884291	0.09162758	0.77269462	0.12845174	-0.01508647	0.31053187	3.44838774	3.44663715	8.22578792		10:45:33
71.351318	271.636876	81.9272138	153.734074	73.7289625	85.8618216	78.5914966	71.922473	68.9154782	68.576561	84.1728936	68.8183525	68.8029287	82.1032057	84.1824071	69.8881559	0.04244039	0.0924118	0.77368826	0.12970969	-0.0024948	0.32451445	3.43006393	3.44438991	8.12671494		10:46:33
71.4760027	280.990707	82.8274915	172.961579	74.032719	89.3455183	80.5777411	71.9130888	68.8819135	68.5630027	84.3943708	68.801044	68.78562	82.1887024	83.9104185	69.8596065	0.044560971	0.09014192	0.782731	0.13604762	-0.02335223	0.30765275	3.40994605	3.4992843	8.02796568		10:47:33
71.6464158	282.435031	83.1881256	191.612244	74.4706514	92.8639782	82.8330143	71.9515349	68.9347783	68.5635824	84.594282	68.864132	68.7792068	82.2157758	83.9019247	69.8414165	0.045384514	0.09016671	0.77942955	0.13875279	-0.0463783	0.30062089	3.40565363	3.49465048	7.95077096		10:48:33
71.8400945	283.684729	83.4108722	208.188944	74.9300691	96.2497845	85.1339644	71.9961832	68.9201014	68.5549197	84.6717036	68.8567141	68.7729524	82.2361582	83.2908677	69.8315291	0.043740596	0.09236167	0.7866354	0.16877006	-0.00576477	0.32045761	3.50014648	3.49787793	7.85041126		10:49:33
72.0665977	285.009858	84.1419827	223.159774	75.5239656	99.9111519	87.5633987	72.0844944	68.9514385	68.5762566	84.8669496	68.872239	68.7930365	82.2705982	83.0182137	69.827437	0.043390739	0.09049899	0.78271625	0.16422843	-0.00045107	0.32632405	3.48139486	3.48265371	7.76924574		10:50:33
72.319152	306.691042	86.5803639	237.048891	76.1720308	103.834713	90.0902258	72.1235087	68.9897195	68.5878827	85.0438437	68.8925772	68.8504401	82.7688743	83.0519525	69.8511795	0.050116795	0.09197059	0.77804473	0.14033261	0.01318518	0.37059034	3.48009011	3.46159091	7.62233594		10:51:33
72.4469087	319.922093	87.3923883	252.420572	76.8289319	108.288674	92.8187992	72.3857369	68.9592925	68.5515931	85.2336048	68.8621687	68.7562863	82.4667791	82.6265767	69.8094548	0.04987531	0.08737878	0.77568931	0.14609597	-0.00885308	0.30890914	3.4650675	3.45857	7.52920367		10:52:33
72.6844771	326.364998	88.520563	267.544788	77.5661836	112.452858	95.6693108	72.6066687	69.0009481	68.5824173	85.4030642	68.8988242	68.8092012	82.5541045	82.5209857	69.8519269	0.051301728	0.09153561	0.7864092	0.14374568	0.02163261	0.3141314	3.51223669	3.49609292	7.41798885		10:53:33
72.7487751	327.858016	89.3443187	282.443449	78.3406054	116.282739	98.6004373	72.777755	69.0418261	68.5872169	85.5541568	68.9190558	68.8090076	82.6021119	82.3763058	69.8467336	0.052874344	0.09089782	0.78809095	0.15572188	0.01539982	0.3638486	3.49057397	3.47868866	7.29432485		10:54:33
72.7514666	359.261205	92.1705607	298.20369	79.1630788	120.326026	101.387466	73.1733131	69.03763	68.5657429	85.734967	68.9434277	68.8112874	82.7850941	82.2560162	69.8294294	0.057228866	0.09253246	0.78975548	0.15223854	0.04350056	0.37244419	3.48338804	3.48121291	7.15848623		10:55:33
72.9510341	379.602928	94.3205539	317.693248	80.0585196	125.214499	104.259543	73.5071822	69.0641716	68.6085496	85.9922961	68.9674696	68.8190733	82.9480428	82.2119933	69.8167953	0.059521618	0.0877448	0.78535196	0.1629	0.01626213	0.2903411	3.48873815	3.46622665	6.99960966		10:56:33
73.1111658	382.2166097	94.9861105	338.974374	80.9603901	129.418474	107.379151	73.8390193	69.0612225	68.6097688	86.1831694	68.9515985	68.8094541	83.2008853	82.1635169	69.7792641	0.056976913	0.09159954	0.79501708	0.15219311	-9.909E-05	0.3483613	3.4797754	3.4647659	6.85080964		10:57:33
73.3015783	401.998419	97.1643297	358.12671	81.9381493	133.520433	110.77811	74.2519804	69.0900356	68.6060138	86.4576984	68.9665016	68.8139558	83.4348851	82.1923662	69.7841612	0.060272412	0.09058305	0.7967881	0.15633173	0.00158311	0.3760683	3.46316939	3.4584394	6.8725256		10:58:33
73.4807828	424.343158	100.045708	379.735251	82.9884082	137.937781	114.549073	74.7298019	69.0718936	68.6279463	86.7638649	68.9789433	68.8342996	83.739052	82.2569288	69.8211812	0.063416801	0.09093065	0.79590221	0.14281465	-0.02738293	0.35517926	3.4590601	3.44806975	6.49228321		10:59:33
73.6076811	425.909149	99.7643144	399.998382	84.1325111	141.798753	118.803747	75.2514286	69.0544359	68.6175722	86.9440012	68.9710719	68.8147556	83.9976601	82.2424852	69.815813	0.062009413	0.09156982	0.79945748	0.13923811	-0.05230512	0.32753373	3.51467407	3.494798	6.32770658		11:00:33
73.7405867	423.582152	100.642008	417.550983	85.3646503	144.655227	122.840986	75.8868571	69.0475119	68.6285794	86.3017958	68.9875402	68.8207535	84.2249109	82.1216774	69.8213913	0.061467722	0.09852842	0.79781999	0.13146167	-0.06099999	0.33437627	3.5045	3.48601228	6.17273934		11:01:33
73.9147856	415.692844	99.2294186	433.650941	86.6529954	150.092751	126.725241	76.5601653	69.055472	68.616941	85.3736368	68.9345933	68.824129	84.5554039	82.0178443	69.7943489	0.060651428	0.08971108	0.79487448	0.13374274	-0.05057931	0.3626463	3.48792514	3.48119324	6.02389833		11:02:33
74.0620827	397.3977227	98.3970438	444.607632	88.0624495	154.457578	129.65123	77.3017966	69.0422347	68.6074531	84.4500465	68.932193	68.7929653	84.7597849	81.7897628	69.8090328	0.062666556	0.09252702	0.80580336	0.13359514	0.02455061	0.34627633	3.51274318	3.49168694	5.90759402		11:03:33
74.1658261	396.0147729	98.1418593	457.471404	89.5740876	158.830536	132.0666545	78.1237581	69.0320282	68.6326807	83.7735382	68.9411603	68.8048512	84.9258042	81.9104883	69.8959104	0.059616098	0.0886196	0.79054472	0.12871289	-0.0059805	0.30851329	3.51395285	3.48658597	5.78594615		11:04:33
74.2244302	398.9185616	99.4455703	469.457384	91.1944411	162.999319	134.89053	78.9024007	69.0218267	68.6329053	83.1940707	68.9290573	68.8019142	85.0320432	82.1684495	69.8973437	0.058877343	0.08834942	0.79295207	0.1088319	-0.00689749	0.29970871	3.51115158	3.4682774	5.76088479		11:05:33
74.3723738	401.8330363	99.4032419	461.882587	92.7979256	167.049011	138.116911	80.1019148	69.0049348	68.6225943	82.4611098	68.9135681	68.7876789	85.1932177	82.5157572	70.0329011	0.061127601	0.09064285	0.77903067	0.10637942	-0.0621264	0.31001309	3.49826148	3.48372406	5.52055496		11:06:33
74.6569417	403.6382778	99.1207044	467.220166	94.5321187	170.796444	141.520773	81.2615981	69.0684396	68.6103171	81.9503914	68.9233852	68.8041663	85.2657906	82.8740531	70.098122	0.06065419	0.08889276	0.80015329	0.11712038	-0.08578829	0.35091834	3.5036706	3.48039663	5.39957094		11:07:33
74.7380429	404.913975	99.4437302	472.264254	96.2600595	175.411352	145.239487	82.3794104	69.0651324	68.6102043	81.5959251	68.9577772	68.7996281	85.3410734	83.2358225	70.1509607	0.060324496	0.09006564	0.79085452	0.13796448	-0.08510705	0.3093935	3.51306772	3.48057037	5.27966887		11:08:33
74.7708262	413.968075	100.61327	477.192918	98.0183967	179.590201	149.436267	83.5655691	69.0738522	68.6144802	81.7101851	68.9413032	68.7854015	85.5600972	83.7716114	70.2314251	0.063797933	0.08975922	0.79115202	0.14007831	-0.0784195	0.31059088	3.4922803	3.47380406	5.13288894		11:09:33
74.9486945	430.8409921	101.629269	483.574808	99.7912019	183.707749	153.77152	84.8913941	69.105092	68.6365551	82.0580313	68.9746291	68.8174794	85.9745998	84.4081954	70.3617893	0.068200063	0.0899099	0.78533721	0.12562458	-0.1227458	0.37905561	3.48432562	3.47235834	4.98416677		11:10:33
75.0758068	447.170542	105.01452	492.575557	101.558703	187.839748	158.18075	86.1772749	69.0871093	68.6289908	82.4898898	68.9720679	68.8107494	86.5732275	84.9610101	70.44837	0.066358766	0.08916999	0.79108072	0.13505981	-0.15805698	0.32237786	3.49184594	3.47359261	4.80903006		11:11:33
75.2373049	442.2342588	103.897883	504.213363	103.3444223	192.2013421	162.542289	87.4657746	69.0491886	68.6184409	82.8564509	68.9923195	68.8143437	87.1728092	85.4755402	70.6173561	0.06410917	0.08931773	0.78796801	0.12997319	-0.10736103	0.36695147	3.4907133	3.47633784	4.67337584		11:12:33
75.4480861	428.274693	102.897034	513.8554	105.1693272	196.833467	166.911766	88.7589142	69.0741404	68.6272753	83.3891708	68.9461766	68.8077835	87.2621187	85.8166291	70.5570347	0.063309193	0.09133339	0.78893182	0.12675998	-0.1092231	0.3595336	3.47716099	3.48059332	4.54026227		11:13:33
75.4456265	423.927702	102.865114	520.154216	106.997348	201.6362236	171.242612	90.1692157	69.0937638	68.6302271	83.7735856	68.9803901	68.8124025	88.7809951	86.0881629	70.6141295	0.062464869	0.08668995	0.80293663	0.1153832	-0.14260408	0.32698052	3.45615884	3.5000219	4.41962656		11:14:33
75.5706012	425.916718	103.644062	524.880623	108.8758353	205.8294159	175.606101	91.6247957	69.1157676	68.6397269	84.1457586	69.0027077	68.8156941	89.4153116	86.6777045	70.6403695	0.06800809	0.08207671	0.81109667	0.1165333	-0.14872454	0.34352648	3.49241471	3.50157247	4.3415		11:15:33
75.8272962	435.701761	104.149274	529.211925	110.76066	211.61396	180.050977	93.0560683	69.1232138	68.6538471	84.6097955	68.983165	68.834353	85.6958414	86.6552784	70.7426815	0.065604756	0.08928488	0.78685668	0.16657872	-0.16503973	0.34904236	3.45890766	3.48704885	4.15915685		11:16:33
76.0538226	447.71645	104.732728	533.367592	112.6423531	216.6336161	184.532397	94.4921045	69.1191793	68.6710731	84.9630539	68.9974705	68.8419899	85.1420728	86.9127482	70.771135	0.066852511	0.0923471	0.79424259	0.11372551	-0.1584708	0.3005257	3.46033862	3.48717934	4.02410092		11:17:33
76.2892147	451.161163	104.903297	537.315562	114.5191338	221.3855135	189.280638	95.9818614	69.1094157	68.6877566	85.2915489	69.0922914	68.8554003	84.567571	87.1488133	70.8256485	0.065115232	0.09048968	0.79837811	0.11960758	-0.19118535	0.34722526	3.47490659	3.46939412	3.88994187		11:18:33
76.3621481	452.975721	104.740233	541.252919	116.4058887	226.4385515	194.219724	97.4795787	69.0905606	68.6478679	85.5989855	68.9851065	68.837962	84.0020739	87.3357871	70.7650285	0.065508402	0.0898997	0.78830485	0.16374021	-0.2160763	0.31765224	3.47192234	3.49126732	3.75589453		11:19:33
76.4611239	455.807645	105.008433	545.74368	118.3448889	231.31064	199.514409	99.037138	69.1365433	68.6392479	85.9491685	68.9939944	68.8364293	83.5587047	87.5555928	70.7818217	0.067026668	0.09001168	0.79970089	0.16346771	-0.1946625	0.3355466	3.4797377	3.49257043	3.62258016		11:20:33
76.8026461	448.671928	105.333522	549.899779	120.371861	236.0705866	204.9902007	100.671035	69.1563163	68.653606	86.2852879	69.0070996	68.8541208	83.3743396	87.7403295	70.766596	0.065283292	0.0910895	0.79830927	0.18807199	-0.22934921	0.35225833	3.47705177	3.49943018	3.49267109		11:21:33
77.1042262	439.0020239	105.105096	553.417473	122.381553	240.7481313	210.5011135	102.3035764	69.1491582	68.6314482	86.6144822	69.0991058	68.8523125	82.2260151	87.7249799	70.7169908	0.064802691	0.09015965	0.79015898	0.22114061	-0.22160573	0.33622179	3.48238667	3.49441773	3.36446844		11:22:33
77.1042262	432.4786267	104.215139	555.69926	124.4363242	245.4537974	216.119204	103.9243029	69.1394192	68.670473	86.8419366	69.0027061	68.8534786	82.8926819	87.694279	70.7118125	0.063484554	0.09137816	0.80150803	0.18454087	-0.23646821	0.30269602	3.43905946	3.48642206	3.26013212		11:23:33
77.1194269	423.248269	103.925484	555.824755	126.522834	250.264765	221.717488	105.5376685	69.1809018	68.6736115	86.95574	69.0250178	68.8616191	82.8529384	87.5714597	70.6941239	0.062923399	0.0913536	0.80009674	0.18115736	-0.20875292	0.32864506	3.48133093	3.49178857	3.14572919		11:24:33
77.4240807	420.89538	103.6980293	556.668897	128.6068746	255.0600557	227.1417512	107.1492157	69.2146952	68.6822647	87.0775156	69.0488464	68.8945552	87.403343	87.6719867	70.6445748	0.06885189	0.80830403	0.19863121	-0.21582661	0.31407486	3.48353722	3.48204682	3.08355297		11:25:33
77.4655317	420.2406	104.120275	553.041011	130.6823997	259.94784	232.5971504	108.7194579	69.1833017	68.6864342	86.7123531	69.0595126	68.867771	81.851243	87.0407213	70.5998955	0.062448871	0.09015313	0.79425243	0.13763719	-0.22239187	0.29925631	3.45279371	3.48178989	2.93894092		11:26:33
77.9925713	424.739254	104.926214	551.61491	132.824715	264.7639984	237.99156	110.3655575	69.1991021	68.7176829	86.1859825	69.0486381	68.8819064	81.5119999	86.6999237	70.5540423	0.063010797	0.09043631	0.79696574	0.17524188	-0.21729118	0.29773684	3.46223673	3.48425022	2.82629986		11:27:33
78.144459	427.82783	106.340945	551.194133	134.9244854	269.5792424	243.150621	112.018249	69.1903662	68.6901653	85.5235366	69.0415688	68.899242	81.156179	86.3938231	70.4944968	0.064400738	0.08884746	0.7993788	0.14776755	-0.21305611	0.33620799	3.45974034	3.48486653	2.70096825		11:28:33
77.772014	433.288109	107.67154	551.625017	137.0483657	274.3864127	248.6061101	113.6218176	69.2146952	68.7158241	85.1475576	69.0729387	68.9052195	84.4153696	86.8604807	70.5917196	0.066472443	0.08923606	0.79486218	0.12404636	-0.20895729	0.30198004	3.46647571	3.49481112	2.60225987		11:29:33
78.8446752	529.677448	150.663525	553.499299	140.354331	279.263139	252.978502	115.915351	69.1648786	68.7409609	84.5125978	69.057761	68.8839436	81.1706157	86.08842	70.4506975	0.070336338	0.08161005	0.80148098	0.13426503	-0.20180422	0.34639435	3.39316716	3.42997378	2.37374506		11:30:33
79.8006693	523.242254	158.844304	564.109859	143.924739	284.3738602	257.9473103	117.6907459	69.1731122	68.706125	84.3746454	69.0412702	68.8991275	82.8660956	86.800021	70.4054765	0.065028203	0.08077234	0.80705484	0.15157999	-0.21466839	0.32561841	3.39202141	3.41769671	2.26.5080829		11:31:33
80.9698895	591.302505	169.235409	564.525599	146.4119267	289.2238127	263.0124241	119.4619268	69.1597123	68.7139837	84.2913447	69.0599684	68.8554003	84.9427213	86.1651303	70.3817637	0.069336968	0.08955236	0.81571861	0.15239765	-0.20878833	0.34162441	3.39527859	3.40648835	2.01373383	70.00939076	11:32:33
81.4864165	673.259902	184.667644	582.740198	153.680748	294.954082	267.63414	124.160098	69.1650239	68.6835768	85.4612028	69.0212265	68.8694992	86.8908545	89.8042593	70.3637853	0.082363274	0.08141291	0.81913685	0.16953078	-0.20569867	0.31903403	3.47165352	3.4072653	20.8063481	16.48940058	11:33:33
81.0099793	631.768545	147.801391	619.914374	155.555976	300.153163	272.832797	126.757993	69.1604061	68.7289837	85.391726	69.0136907	68.8577944	87.5895545	89.8471163	70.3662516	0.082568288	0.08209152	0.82911422	0.17873894	-0.20983156	0.35833868	3.51131058	3.52537757	20.4609183	16.14397078	11:34:33
79.0401908	646.167841	150.041491	662.654749	157.0042477	305.7799093	278.118391	128.817544	69.1737949	68.7215315	85.0651908	69.01666	68.8682672	87.7601201	89.5716663	70.3954614	0.085992844	0.08547948	0.82082105	0.16949672	-0.21134165	0.36179374	3.50441313	3.51186133	20.1136936	15.79674614	11:35:33
76.0006756	665.210019	151.881827	705.162343	157.8922216	311.1106982	283.2820797	131.0506858	69.2031923	68.7358225	84.6144822	69.0704589	68.8583243	87.7171895	89.4449169	70.3548365	0.086156964	0.08215059	0.82901853	0.17484597	-0.20362084	0.38891924	3.51241669	3.51786852	19.7863789	15.46963769	11:36:33
75.9335277	676.527969	152.100758	745.434663	158.8903361	315.9929227	287.327	131.3757567	69.2052063	68.7308553	84.7109946	69.05641	68.8742556	87.4952033	89.1481774	70.4226891	0.0851081	0.08112508	0.82983953	0.19348788	-0.20997916	0.34895365	3.51181543	3.51185192	19.4467202	15.12977273	11:37:33
75.4393144	689.804472	153.851983	781.176886	160.018928	320.69761	291.4729755	132.2717776	69.2177888	68.7427061	83.661386	69.0899329	68.8969435	87.3520957	86.5549575	70.4403618	0.085541994	0.08119008	0.82277817	0.19783355	-0.20741314	0.37076736	3.51182363	3.5167869	19.0826249	14.76567736	11:38:33
75.1985892	699.627	154.457709	811.631367	161.416578	325.1570867	295.2161334	133.265774	69.2381585	68.7633954	82.2974689	69.0889484	68.9255526	87.246642	83.7146061	70.3889745	0.086157167	0.08060693	0.8288116	0.17979487	-0.19576386	0.34127781	3.51568541	3.51658541	18.7166465	14.396697	11:39:33
75.5146505	709.810383	156.575164	838.920786	163.0566525	329.690411	298.7256771	134.344071	69.2401084	68.7486736	81.1973373	69.0658893	68.9079127	86.9921094	77.6860493	70.4221654	0.086980688	0.08146946	0.82127837	0.19128519	-0.20197454	0.34281695	3.48435348	3.52730519	18.350742	14.03379449	11:40:33
74.6504724	717.728234	158.203571	863.645415	165.149629	334.138797	302.037839	135.394892	69.230754	68.7768353	81.1263105	69.0919627	68.8964725	86.8415817	75.8692626	70.4078177	0.086647561	0.08170085	0.82720873	0.17747864	-0.17620079	0.37656987	3.49089524	3.51106791	17.9915681	13.67462061	11:41:33
74.8534211	723.288532	160.404238	886.266928	167.489966	338.1347305	305.3216264	136.2511274	69.2660481	68.7871659	81.1430935	69.1022335	68.9027417	86.8388402	75.1430935	70.4012645	0.088224296	0.08346141	0.82629902	0.17214178	-0.16939552	0.37617111	3.48089656	3.50549659	17.6291651	13.31221764	11:42:33
75.872039	724.715937	160.397413	905.257643	169.8926998	343.0789977	308.4116346	137.328107	69.2322891	68.7817057	81.3801229	69.0872459	68.8938395	86.6411114	74.7226664	70.3764449	0.087141922	0.08261826	0.8520071	0.19657619	-0.17900524	0.37042069	3.4865	3.5141184	17.2559398	12.93899233	11:43:33
74.5934914	730.148338	161.344941	921.52239	172.476156	347.715287	311.390401	138.421224	69.2332214	68.7588767	81.4920615	69.0719228	68.9051929	86.5561102	74.455064	70.4094506	0.088488818	0.08146599	0.86801564	0.19549755	-0.19228951	0.35867306	3.47842967	3.50236094	16.9098749	12.59292737	11:44:33
75.6722841	737.682665	162.603658	936.726081	175.0774669	352.3793438	314.444561	139.701406	69.2211063	68.7492601	81.4522684	69.0581395	68.8714	86.1330086	74.2043451	70.4015078	0.088535369	0.08163079	0.80818583	0.21475406	-0.21148925	0.2806809	3.19474582	3.17369942	16.5504961	12.2335486	11:45:33
74.9423743	743.569711	164.044986	950.6284677	177.6886583	357.1926351	317.51553	141.024207	69.2429624	68.7384853	81.4313258	69.0603252	68.8815683	85.7616847	74.0107728	70.3743583	0.089312144	0.08176102	0.83659622	0.19914737	-0.19914737	0.3244634	3.21668623	3.21784655	15.1896134	11.87266592	11:46:33
73.9040742	742.543582	163.674987	962.067808	180.3865554	362.173153	320.766996	142.537638	69.2681354	68.7783746	81.5085356	69.0951691	68.9017634	85.5981823	73.8059365	70.4489269	0.089804275	0.0821876	0.81848284	0.20989452	-0.18691903	0.32359736	3.19854532	3.21156655	15.8424912	11.52554372	11:47:33
74.9739896	742.644373	164.131994	971.537002	183.0078867	367.1699582	323.919374	143.9428895	69.2538251	68.7915741	81.7651883	69.075439	69.0112105	85.5013239	73.6656511	70.456701	0.088440431	0.0822914	0.84010457	0.19443027	-0.16865033	0.33426808	3.20424293	3.2103913	15.4914146	11.17446713	11:48:33
75.1018282	754.452303	164.71661	979.1625034	185.6404149	372.2955216	326.9410087	145.378817	69.2644868	68.8178405	81.9553465	69.1023755	69.0255748	85.3246955	73.5694206	70.4461268	0.088628941	0.08168548	0.83702629	0.19440214	-0.17403216	0.32478218	3.19705943	3.20352007	15.1439673	10.83231988	11:49:33
75.1359375	743.957774	165.143204	985.469267	188.5366602	377.622025	330.351844	147.02797	69.292456	68.8006165	83.0108398	69.095734	68.9152504	85.2816997	73.5386764	70.462404	0.090621594	0.08238925	0.83846462	0.21861445	-0.18395562	0.28219545	3.20573781	3.20094008	14.8047922	10.48784468	11:50:33
75.6882981	742.758028	165.550128	990.590548	191.2885563	382.8480133	334.6218574	149.2901011	69.7936755	83.6904583	69.0996308	68.9299853	85.2516666	73.5134515	70.50087	0.087420615	0.08066857	0.83139097	0.23608837	-0.17354393	0.32135258	3.19259365	3.1919675	14.4652141	10.14826656	11:51:33
74.389066	749.229776	165.953996	995.445326	194.180771	388.302444	336.8767765	150.407566	69.3267626	68.8256765	84.539571	69.1267096	68.9469783	85.3677306	73.545795	70.5457569	0.088714788	0.08161604	0.8299428	0.24108802	-0.16297329	0.33325254	3.1860273	3.18666656	14.1268284	9.809880916	11:52:33
75.1399501	746.670396	166.362241	997.044059	196.8570951	393.4246268	341.1263258	151.6866753	69.3501521	68.8666753	84.9418868	69.1450189	68.9637068	85.3507268	73.5839661	70.5453893	0.090151468	0.08216866	0.84641171	0.24119764	-0.14137784	0.33180129	3.18412755	3.18756152	13.7934093	9.476481826	11:53:33
75.1898256	744.332283	165.162406	1004.06282	199.7228881	399.2443293	343.622214	153.8356996	69.3489995	68

Time	Flue	Room	Tunnel	DGM 1	DGM 1	Filter 1	DGM 2	DGM 2	Filter 2	DGM 3	Filter 3	Meter #1	Meter #2	Draft	Tunnel	CO	CO2	O2	scale	2.3737451	Meter	Meter		
																%	%	%	Lbs	Corrected	#1	#2	Draft	Calculated
10.0	Temp 1	Temp 2	Dry Bulb 3	In 13	Out 14	15	In 16	Out 17	18	In 19	20	21	22	23	24	25	25	27	28	Scale	Cu Ft	Cu Ft		Tunnel
0.0	71.58075	70.18649	69.52193	68.5149	68.56201	81.71604	68.57827	68.75753	80.59913			920.739	778.856	0.001838	0.093502				8.85	6.47	32.50	27.49	-0.249541	-0.22662
10.0	283.6847	71.84009	83.41087	68.9201	68.55492	84.6717	68.85674	68.77295	82.23616			921.920	780.095	0.043741	0.092362				7.85	5.48	32.54	27.54	-0.239065	-0.22691
20.0	424.3432	73.48078	100.0457	69.07189	68.62795	86.76386	68.97894	68.8343	83.73905			923.122	781.311	0.063417	0.090931				6.49	4.12	32.59	27.58	-0.234146	-0.22727
30.0	413.9681	74.77083	100.6133	69.07385	68.61448	81.71019	68.9413	68.7854	85.5601			924.325	782.521	0.063798	0.089759				5.13	2.76	32.63	27.62	-0.234051	-0.22756
40.0	452.9757	76.36215	104.7402	69.09056	68.64787	85.59899	68.98511	68.83796	84.00207			925.525	783.734	0.065508	0.0899				3.76	1.38	32.67	27.67	-0.233623	-0.22753
50.0	433.2881	77.77201	106.1771	69.17598	68.72163	84.95201	69.07428	68.89046	80.90075			926.727	784.957	0.066472	0.088236				2.37	0.00	32.71	27.71	-0.233382	-0.22794
60.0	699.6278	75.19857	155.4708	69.24316	68.7634	82.29747	69.08895	68.92555	87.24664			927.919	786.165	0.086156	0.080609				18.72	16.34	32.76	27.75	-0.228461	-0.22985
70.0	742.4523	75.10183	164.7179	69.25575	68.7885	82.32447	69.0782	68.90855	85.32466			929.053	787.303	0.09029	0.081856				15.15	12.78	32.80	27.79	-0.227428	-0.22954
80.0	724.2563	76.12214	162.4228	69.34235	68.87137	87.58566	69.14397	68.98016	85.18278			930.186	788.441	0.086265	0.083559				11.93	9.56	32.84	27.83	-0.228434	-0.22911
90.0	681.1975	76.95614	155.0949	69.44708	68.95236	84.49694	69.27788	69.06741	83.7255			931.297	789.552	0.084217	0.082219				9.31	6.93	32.87	27.87	-0.228946	-0.22945
100.0	653.0937	80.85392	153.4144	69.36685	68.9113	82.04895	69.18139	69.04093	81.60706			932.415	790.659	0.079066	0.085028				7.21	4.83	32.91	27.91	-0.230234	-0.22874
110.0	578.2448	82.62528	144.3757	69.47563	68.98717	84.68159	69.29143	69.08262	85.52415			933.515	791.775	0.074082	0.086348				5.84	3.47	32.95	27.95	-0.231479	-0.22841
120.0	521.1718	86.60432	126.7813	69.71276	69.13599	87.12435	69.51149	69.21476	82.31894			934.625	792.890	0.073131	0.087177				4.93	2.55	32.99	27.99	-0.231717	-0.22821
130.0	453.3078	84.97113	123.4089	69.81159	69.27111	83.8946	69.65908	69.39072	85.72182			935.738	794.010	0.065	0.088654				4.47	2.09	33.03	28.03	-0.23375	-0.22784
133.0	438.1666	89.58268	123.0516	69.87542	69.31912	83.05305	69.6975	69.42706	86.69			936.075	794.347	0.064383	0.090347				4.32	1.94	33.04	28.04	-0.233904	-0.22741

Intertek Testing Services

Manufacturer:	**SBI**
Model:	**2.5R Series**
Date:	**11-2-21**
Run:	**1 - HIGH**
Project #:	**G104845527**
Test Duration (min):	**133**
Test Duration (high only):	**81**

RESULTS

Average emission rate:(gr/hr) 3.335

Burn Rate (Dry kg/hr): 4.725

PRESSURE FACTOR: 1.00434

BAROMETRIC PRESSURE

Average:	30.05
Start:	30.1
End:	30

TEMPERATURE FACTORS

DGM #1:	0.99798
DGM #2:	0.99797

DRY GAS METER VALUES

VOLUMES SAMPLED

	avg sample flow dscfm	DGM #1	Final:	936.075
DGM #1: 15.52519	0.11673076		Initial:	920.739
DGM #2: 15.63537	0.11755918			
		DGM #2	Final:	794.347
TOTAL TUNNEL VOLUME (scf): 41885			Initial:	778.856

SAMPLE RATIOS

TEMPERATURES (DEG. RANKIN)

Sample Train 1:	2697.866	DGM #1:	529.070
Sample Train 2:	2678.854	DGM #2:	529.075

TOTAL EMISSIONS

CALIBRATION FACTORS

Sample Train 1 (g):	**7.554**	DGM #1:	1.0100
Sample Train 2 (g):	**7.233**	DGM #2:	1.0070

EMISSION RATES

TUNNEL FLOW RATE: 314.924

Sample Train 1 (g/hr):	**3.41**
Sample Train 2 (g/hr):	**3.26**

PARTICULATE CATCH (mg)

Total Sample Train 1:	2.8
Total Sample Train 2:	2.7
Filter and seal Sample Train 1:	2.5
Filter and seal Sample Train 2:	2.4
Probe Sample Train 1:	0.3
Probe Sample Train 2:	0.3

MAX Allowed	7.50%	
DEVIATION:	2.17%	

	Room Temp		Bar Pressure		Relative Humidity		Air Velocity	
	Before	After	Before	After	Before	After	Before	After
	70	90	30.10	30.00	32.3	32.2	0	0

Average Dilution Tunnel Measurements						Sample Data	
Burn	Velocity	Flow Rate	Temp	Total Sample		Particulate Catch	
Time	(Ft/sec)	(dscf/min)	(R)	1	2	1	2
133	16.93	314.92	584.88	15.53	15.64	2.80	2.70

	Dilution Tunnel Dual Train Precision				
	Sample Ratios		Total Emissions (g)		
	Train 1	Train 2	Train 1	Train 2	Deviation (%)
	2697.87	2678.85	7.55	7.23	2.17%

Burn				Initial		Run	Average
Rate		Surface		Draft		Time	Draft
4.725		0.000		0.002		133.000	0.067

Run	Date	Burn Rate	Emission
1 - HIGH	2021-11-02	4.725	3.335

E&E Boiler Tunnel Traverse Worksheet

Static Pressure: **0.172**

Barometer: 30.1

	TUNNEL VELOCITY	TUNNEL TEMP	SQUARE ROOT
A CENTER	0.091	68.300	0.3017
B CENTER	0.092	67.900	0.3033
A1	0.088	68.100	0.2966
A2	0.096	68.100	0.3098
A3	0.078	68.100	0.2793
A4	0.072	68.000	0.2683
B1	0.081	68.000	0.2846
B2	0.096	68.000	0.3098
B3	0.087	68.000	0.2950
B4	0.076	67.900	0.2757
AVERAGE	0.172	68.2	0.2924

PITOT CONSTANT= 0.9667

E&E FUEL LOAD DATA SHEET

			Test Load Weight: Lower	Ideal	Upper	
Firebox Volume:	1.94	cu. ft	22.12	23.28	24.44	
Load Volume:	1.9400	cu. ft	Loading Density:	10.063	lbs./ft3	
Number of Spacers:			Load Density:	10.063	lbs./ft3	

Piece Size: Thick	x	Wide	x	Length	Weight lbs	Meter Moisture Content Dry Uncorrected %			
2		4		16	3.57	27.00	25.90	21.00	84.00
2		4		15.25	3.88	22.30	17.70	20.50	80.06
2		4		15.25	3.49	25.80	18.90	16.70	80.06
2		4		15.5	5.34	21.60	22.00	18.90	81.38
2		4		16.25	3.24	26.80	16.20	15.30	85.31
									0.00
									0.00
									0.00
									0.00

Test Load Weigh 19.522 lbs. **Dry Weigh** 7.312 kg.

Average Moisture Content: %

Dry: 21.11 21.107 Wet: 17.428

Pre-test moisture content: %

#DIV/0! #DIV/0! Wet: #DIV/0!

Coal Bed Range: 4.0 lbs. to 4.8 lbs. 20% to 25% of test load

November 20 Adjunct to ASTM E XXXX Wood Heater Cordwood Test Method
Cordwood Fuel Load Calculators - 10 lb/ft^3 Nominal Load Density
Core 45-65% of Total Load Weight, Remainder 35-55% of Total Load Weight
Values to be input manually

THIS DOCUMENT IS NOT AN ASTM STANDARD; IT IS UNDER CONSIDERATION WITHIN AN ASTM TECHNICAL COMMITTEE BUT HAS NOT RECEIVED ALL APPROVALS REQUIRED TO BECOME AN ASTM STANDARD. IT SHALL NOT BE REPRODUCED OR CIRCULATED OR QUOTED, IN WHOLE OR IN PART, OUTSIDE OF ASTM COMMITTEE ACTIVITIES EXCEPT WITH THE APPROVAL OF THE CHAIRMAN OF THE COMMITTEE HAVING JURISDICTION AND THE PRESIDENT OF THE SOCIETY. *COPYRIGHT ASTM, 100 BARR HARBOR DRIVE, WEST CONSHOHOCKEN, PA 19428. ALL RIGHTS RESERVED.*

For All Usable Firebox Volumes - High Fire Test Only

Nominal Required Load Density (wet basis)	10	lb/ft^3				
Usable Firebox Volume	1.94	ft^3				
Total Nom. Load Wt. Target	19.40	lb				
Total Load Wt. Allowable Range	18.40	to	20.40	lb		
Core Target Wt. Allowable Range	8.70	to	12.60	lb		
Remainder Load Wt. Allowable Range	6.80	to	10.70	lb		
						Mid-Point
Core Load Pc. Wt. Allowable Range	2.90	to	4.90	lb		3.90
Remainder Load Pc. Wt. Allowable Range	1.90	to	10.70	lb		6.30
	Pc. #					
Core Load Piece Wt. Actual	1	3.57	**3.5**	In Range		
	2	3.88	**3.5**	In Range		
	3	3.49	**3.5**	In Range		
Core Load Total. Wt. Actual		10.94		In Range		
	Pc. #					
Remainder Load Piece Wt.	1	5.34	**5.2**	In Range		
(1 to 3 Pcs.)	2	3.24	**3.2**	In Range		
	3			NA		
Remainder Load Piece Weight Ratio - Small/Large		61%		In Range		≤ 67%
Remainder Load Tot. Wt. Act		8.58	lb	In Range		
Total Load Wt. Actual		19.52	lb	In Range		
Core % of Total Wt.		56%		In Range		45-65%
Remainder % of Total Wt.		44%		In Range		35-55%
Actual Load % of Nominal Target		101%		In Range		95-105%
Actual Fuel Load Density		10.1	lb/ft^3			
Kindling and Start-up Fuel						
Maximim Kindling Wt. (20% of Tot. Load Wt.)		3.90	lb			
Actual Kindling Wt.		3.54	lb	In Range		18.1%
Maximum Start-up Fuel Wt. (30% of Tot. Load Wt.)		5.86	lb			
Actual Start-up Fuel Wt.		4.98	lb	In Range		25.5%
Allowable Residual Start-up Fuel Wt. Range	2.0	to	3.9	lb		Mid-Point
Actual Residual Start-up Fuel Wt.		2.37	lb	In Range		2.9
Total Wt. All Fuel Added (wet basis)		28.05	lb			
High Fire Test Run End Point Range	Low		High			Mid-Point
Based on Fuel Load Wt. (w/tares)	1.8	to	2.1	lb		2.0
Actual Fuel Load Ending Wt.		1.9	lb	In Range		

Fuel Piece Moisture Reading (%-dry basis)

1	2	3	Ave.		Pc. Wt. Dry Basis			
27	25.9	21	24.6	In Range	2.87	lb	1.30	kg
22.3	17.7	20.5	20.2	In Range	3.23	lb	1.46	kg
25.8	18.9	16.7	20.5	In Range	2.90	lb	1.31	kg
21.6	22	18.9	20.8	In Range	4.42	lb	2.00	kg
26.8	16.2	15.3	19.4	In Range	2.71	lb	1.23	kg
					0.00	lb	0.00	kg
Total Load Ave. MC (%-dry basis)			21.1	In Range				
Total Load Ave. MC % (wet basis)			17.4					
Total Test Load Weight (dry basis) →					16.12	lb	7.31	kg
Kindling Moisture (%-dry basis)								
10	10	10	10.0	In Range	3.22	lb	1.46	kg
Start-up Fuel Moisture Readings (%-dry basis)								
23.8	16.6	21.5	20.6	In Range	4.13	lb	1.87	kg
Total Wt. All Fuel Added (dry basis) →					23.47	lb	10.65	kg
Total Wt. All Fuel Burned (dry basis) →					19.2	lb	8.7	kg

Time	Flue	Room	Tunnel	DGM 3	DGM 3	Filter 3			
10.0	Temp 1	Temp 2	Dry Bulb 3	In 13	Out 14	15			
0.0	71.58075	70.18649	69.52193	70.01235	70.01235	84.19279			
10.0	283.6847	71.84009	83.41087	69.83153	69.83153	83.29087			
20.0	424.3432	73.48078	100.0457	69.82118	69.82118	82.25693			
30.0	413.9681	74.77083	100.6133	70.23143	70.23143	83.77161			
40.0	452.9757	76.36215	104.7402	70.76503	70.76503	87.33579			
50.0	433.2881	77.77201	106.1771	70.4797	70.4797	86.09199			
60.0	699.6278	75.19857	155.4708	70.38897	70.38897	83.71461			

Meter #1	Meter #2	Draft	Tunnel	CO	CO2	O2	scale	2.3737451	Meter	Meter		
21	22	23	24	% 25	% 25	% 27	Lbs 28	Corrected Scale	#1 Cu Ft	#2 Cu Ft	Draft	Calculated Tunnel
223.732		0.001838	0.093502				8.85	6.47	7.90	0.00	-0.249541	-0.22662
224.940		0.043741	0.092362				7.85	5.48	7.94		-0.239065	-0.22691
226.155		0.063417	0.090931				6.49	4.12	7.98		-0.234146	-0.22727
227.361		0.063798	0.089759				5.13	2.76	8.03		-0.234051	-0.22756
228.547		0.065508	0.0899				3.76	1.38	8.07		-0.233623	-0.22753
229.763		0.066472	0.088236				2.37	0.00	8.11		-0.233382	-0.22794
230.977		0.086156	0.080609				18.72	16.34	8.15		-0.228461	-0.22985

Intertek Testing Services

Manufacturer:	**SBI**		RESULTS		
Model:	**2.5R Series**		**Average emission rate:(gr/hr)**		**#DIV/0!**
Date:	**11-2-21**				
Run:	**1 - HIGH - 1st hour**		Burn Rate (Dry kg/hr):		#VALEUR!
Project #:	**G104845527**				
Test Duration (min):	**60**				
Test Duration (high only):	**NA**				
PRESSURE FACTOR:		1.00434	BAROMETRIC PRESSURE		
				Average:	30.05
TEMPERATURE FACTORS				Start:	30.1
DGM #3:		0.99582		End:	30
DGM #2:		1.14783			
			DRY GAS METER VALUES		
VOLUMES SAMPLED			DGM #3	Final:	230.977
DGM #3:		7.12285		Initial:	223.732
DGM #2:		0.00000			
SAMPLE FLOW (dscfm)		0.11871	DGM #2	Final:	0.000
TOTAL TUNNEL VOLUME (scf):		19479		Initial:	0.000
SAMPLE RATIOS			TEMPERATURES (DEG. RANKIN)		
Sample Train 3:		2734.732		DGM #3:	530.219
Sample Train 2:		#DIV/0!		DGM #2:	460.000
TOTAL EMISSIONS			CALIBRATION FACTORS		
Sample Train 3 (g):		**6.016**		DGM #3:	0.9830
Sample Train 2 (g):		**#DIV/0!**		DGM #2:	0.0000
EMISSION RATES			TUNNEL FLOW RATE:		324.651
Sample Train 3 (g/hr):		**6.02**			
Sample Train 2 (g/hr):		**#DIV/0!**	PARTICULATE CATCH (mg)		
				Total Sample Train 3:	2.2
				Total Sample Train 2:	
				Filter and seal Sample Train 3:	2.2
MAX Allowed		7.50%		Filter and seal Sample Train 2:	
				Probe Sample Train 3:	0
DEVIATION:		#DIV/0!		Probe Sample Train 2:	

Ambiant	Flue	Dilution Tunn	Firebox Top	Firebox Back	Firebox Right	Firebox Left	Firebox Bottor	DGM Inlet 1	DGM Outlet 1	Probe Temp 1	DGM inlet 2	DGM outlet 2	Probe Temp 2	Probe Temp 3	DGM inlet 3	Manomètre Di	Manomètre Ti	Trans Vacuun	Trans Pressio	Trans Pressio	Trans Vacuun	Massflow 1	Massflow 2	Balance	Weight for BR	Date	weight loss for	weight loss %
89.1861127	419.218059	128.259153	595.15979	307.705542	507.283674	488.791595	274.236114	69.5560884	69.4585755	74.3102812	69.4923304	69.5569218	80.0458074	75.2778948	71.0994356	0.06200803	0.08779557	0.43544571	0.38479268	-0.07462724	-0.13298907	0.00787318	0.20566182	4.13445929	23.47335091	13:01:17			
87.3238622	671.59864	145.116812	823.297451	315.565825	485.024293	474.207802	290.319809	70.2644216	69.66864	84.5228601	70.0982031	69.7869766	83.7534943	85.7126956	70.9570633	0.08358061	0.08579926	0.82614412	0.40759167	-0.0721634	0.22347452	3.49634206	3.48944789	24.2057394	19.803631	13:11:17			
84.5172239	542.913865	132.871294	877.741984	314.821619	468.502953	457.836922	271.925752	70.3133145	69.7558811	83.1321373	70.1241871	69.8275476	86.3678085	86.2756733	71.0217638	0.07516334	0.09079041	0.83265719	0.38211312	-0.06736063	0.25535391	3.51319066	3.4918279	22.1371273	17.73501889	13:21:18			
88.3269737	506.971002	127.023763	841.797805	303.855762	458.865869	445.933122	254.585502	70.3147468	69.7881473	84.0032868	70.1381175	69.8568961	83.1604608	85.4559434	71.1102251	0.07425124	0.08831828	0.82278063	0.36504795	-0.07168653	0.24524623	3.49767631	3.51526088	20.4759696	16.07386119	13:31:18	7.39948973	31.2%	
87.9103372	497.29102	122.331585	819.819465	286.664407	447.693145	434.153669	234.467617	70.4104023	69.8784106	86.1810856	70.2275325	69.9217416	82.4218589	85.7889249	71.1904377	0.07135806	0.08908613	0.81957941	0.31350045	-0.05917434	0.2624497	3.51343325	3.49570444	19.0067619	14.60465354	13:41:18	5.19897745	21.9%	
85.2316661	495.344971	128.50331	828.661542	269.509883	448.432927	429.505518	219.527487	70.5569414	69.9666597	86.5243402	70.3674196	70.0529004	83.7953866	87.5097848	71.421856	0.07162345	0.08962074	0.8314008	0.2301956	-0.03701119	0.23207256	3.52649874	3.49081984	17.4957975	13.09368912	13:51:18	4.64132977	19.5%	
85.3241412	488.689143	127.191297	828.242395	259.023724	451.246202	426.606971	206.604924	70.4980872	70.01278	83.9454338	70.276068	70.0381937	81.6294904	85.5010594	71.2847513	0.07238617	0.08957203	0.83367755	0.28239028	-0.03172019	0.24116234	3.51179604	3.49823362	16.0649618	11.66285346	14:01:18	4.41100773	18.6%	
83.9334612	535.328929	128.895534	853.082697	247.098558	449.440861	422.905332	192.412364	70.6005738	70.0752965	86.8398364	70.3148328	70.0861283	86.0751274	4186.78288	4186.78288	0.07574925	0.08720989	0.82757262	0.22631251	-0.05308856	0.23019658	3.49695837	3.48736128	14.5245751	10.12246689	14:11:18	4.48218685	18.9%	
77.2016199	524.703426	125.146755	934.585717	240.034168	453.673974	425.849661	179.794438	70.6262306	70.0809627	84.7063107	70.3942281	70.1634494	84.328735	4187.05004	4187.05004	0.07244862	0.09043186	0.85442153	0.1782053	-0.04299478	0.24713942	3.49326378	3.49839917	12.5702471	8.168138678	14:21:18	4.92555044	20.7%	
79.2768114	478.249824	119.358057	868.715716	238.239888	463.244091	435.303999	174.439004	70.5860476	70.0811805	81.6867219	70.334879	70.1245072	80.5552902	4187.30742	4187.30742	0.06809328	0.09132634	0.87304858	0.20999671	-0.06061631	0.25871003	3.49415219	3.51201376	11.3779045	6.975796117	14:31:18	4.68705734	19.7%	
82.840869	436.665934	119.750654	785.75446	240.139646	470.512769	443.159347	171.62769	70.6816312	70.1047163	84.7505633	70.4179781	70.1917845	87.3567464	4187.39537	4187.39537	0.06322694	0.08987851	0.88144747	0.25980703	-0.0486037	0.30186744	3.43198827	3.49130994	10.6087479	6.206639481	14:41:18	3.91582721	16.5%	
86.0854561	421.89053	114.306994	751.744535	243.881822	468.235655	447.845433	179.256636	70.72427	70.1781947	86.2180931	70.4851975	70.2427648	86.4283926	4187.4046	4187.4046	0.06353684	0.09074779	0.88774172	0.23126289	-0.06719032	0.26491822	3.49986619	3.50638992	9.82232711	5.420218731	14:51:18	2.74791995	11.6%	
83.2183099	387.929879	114.377322	700.994299	241.024005	462.249246	447.239928	177.925172	70.7936468	70.2300936	86.3224535	70.5200115	70.3038266	81.7668435	4187.5064	4187.5064	0.05809432	0.09121871	0.88393567	0.23927886	-0.05189638	0.27757803	3.48626143	3.51501173	9.43654608	5.034437703	15:01:18	1.94135841	8.2%	
84.2575447	352.241135	110.027219	626.654563	239.412406	458.419362	444.309786	182.060974	70.7902736	70.2400499	85.6091603	70.5470436	70.3271124	83.5840658	4187.61656	4187.61656	0.05485757	0.09221302	0.89575214	0.24402487	-0.03924794	0.28630638	3.53062442	3.54617483	9.16364359	4.761535213	15:11:18	1.44510427	6.1%	
81.2932803	326.449235	102.414731	569.520264	227.446701	447.222349	433.106227	182.13586	70.850989	70.3091127	84.9633616	70.5706971	70.3836759	87.3537115	4187.69016	4187.69016	0.05003771	0.09360372	0.89275745	0.23144455	-0.08265457	0.2568783	3.53761038	3.552533	9.14132687	4.739218488	15:21:18	0.68100024	2.9%	
79.8696832	305.79093	98.8465952	530.691029	222.04608	438.067415	424.435755	182.024897	70.8866796	70.3127377	85.6337491	70.6188877	70.3910498	83.0049201	4187.65587	4187.65587	0.04677418	0.09182821	0.90062035	0.25911443	-0.07284465	0.2731278	3.60647834	3.60456712	8.92160178	4.519493402	15:31:18	0.5149443	2.2%	
79.3638839	287.74522	95.9358122	496.62261	218.13638	430.173343	416.935679	181.710563	70.8879823	70.3915196	85.8983034	70.6839139	70.459832	81.1362009	4187.72488	4187.72488	0.04601866	0.09339771	0.88382257	0.26029526	-0.09525759	0.27152227	3.65469656	3.65989915	8.66046823	4.25835985	15:41:18	0.50317536	2.1%	
79.2549901	276.590295	93.6621262	467.480643	212.822612	423.669348	411.11505	178.587951	70.9027262	70.3779421	84.5330001	70.6711712	70.4600004	83.0063821	4187.76656	4187.76656	0.04394636	0.09174072	0.89532187	0.24789661	-0.09349771	0.27642244	3.66355441	3.6575257	8.46204361	4.059935231	15:51:18	0.67928326	2.9%	
78.5923799	268.06451	92.3304015	449.820822	210.387471	414.334712	405.729588	176.820177	70.8949997	70.3543846	83.6363934	70.6476171	70.4901764	84.1394428	4187.76205	4187.76205	0.04180232	0.09237762	0.88439298	0.26550678	-0.10150233	0.27180256	3.64410452	3.638838	8.23456955	3.832461168	16:01:18	0.68703223	2.9%	
78.2061748	263.812604	91.2704355	437.176571	208.417023	405.468101	400.545164	175.660778	70.899627	70.3531813	83.5859617	70.6380841	70.4814757	85.3341115	4187.74431	4187.74431	0.04242006	0.0919563	0.89441461	0.25536759	-0.07627358	0.32226721	3.66102032	3.68489913	8.01018524	3.608076862	16:11:18	0.65028299	2.7%	
78.1070048	260.509365	90.5297658	429.748924	205.642376	397.640206	395.26519	174.431727	70.9067048	70.3431823	83.5731335	70.6130925	70.4489846	85.5750935	4187.6454	4187.6454	0.04149849	0.09265086	0.87136684	0.22428013	-0.03894138	0.31729819	3.60079548	3.68452705	7.79652493	3.394416549	16:21:18	0.66551868	2.8%	
78.0368642	257.79336	89.6312489	422.693295	204.644378	391.048777	390.916349	172.90266	70.8912819	70.3577472	83.5122953	70.620575	70.4493867	84.9248077	4187.67051	4187.67051	0.04198225	0.09352173	0.88223917	0.23302277	-0.04925088	0.29834414	3.74495022	3.69544528	7.56625206	3.164143676	16:31:18	0.66831749	2.8%	
74.1003056	255.746035	88.5737904	416.855774	205.518846	384.927983	388.147122	173.173671	70.8716363	70.3564249	83.4129149	70.6100898	70.4280707	85.2918583	4187.59092	4187.59092	0.04177199	0.09212636	0.89962212	0.20546643	-0.06461294	0.30831905	3.72987188	3.69955785	7.28344514	2.881336756	16:41:18	0.72674011	3.1%	
73.0006149	250.305827	87.919542	412.449767	204.098015	380.994862	385.169423	172.651201	70.8549285	70.3326316	82.8603688	70.5862994	70.4046947	84.468578	4187.41248	4187.41248	0.04026562	0.09343292	0.89291235	0.18501774	-0.05954902	0.30861163	3.69363077	3.71343635	7.03815375	2.636045375	16:51:18	0.75837117	3.2%	
72.3504044	247.379656	87.2594597	403.959401	202.404405	376.775124	381.357301	171.150571	70.7721775	70.303597	83.0388817	70.5393583	70.3898237	84.5075765	4187.33329	4187.33329	0.03862589	0.09181511	0.87894698	0.1701212	-0.07387787	0.29153602	3.67587901	3.71448211	6.81408498	2.4119766	17:01:19	0.75216708	3.2%	
71.6977337	246.682679	87.8539813	402.390956	202.015301	370.919069	376.024725	169.993794	70.7142415	70.2319009	83.0996749	70.4451776	70.2989688	84.3714657	4187.1881	4187.1881	0.04069108	0.09390384	0.88667957	0.16782767	-0.08264321	0.31828167	3.63272897	3.71206232	6.60437906	2.202270684	17:11:19	0.67906607	2.9%	
71.5830011	244.233561	87.6852896	399.962841	200.771262	367.665685	370.37223	168.964916	70.6240277	70.1687446	83.0361023	70.3807782	70.2420632	84.2765016	4187.04981	4187.04981	0.04163761	0.09498344	0.90170463	0.28403663	-0.07570587	0.30134866	3.6994382	3.70473586	6.41809628	2.015987904	17:21:19	0.62005747	2.6%	
71.606072	239.560875	85.3083452	388.759463	197.656102	367.086122	365.20218	165.902983	70.6475258	70.1614203	82.6550566	70.3680395	70.2268242	84.6017423	4186.91559	4186.91559	0.03847135	0.09390781	0.89282876	0.31675907	-0.08674203	0.33421153	3.70651267	3.7081436	6.25092983	1.848821452	17:31:19	0.56315515	2.4%	
71.5624537	233.826414	84.431037	379.294436	195.378722	364.500466	358.983145	162.522245	70.589726	70.0944417	82.4287003	70.339391	70.1815103	83.911931	4186.84769	4186.84769	0.03942985	0.09557647	0.90601964	0.24701099	-0.07857845	0.30898536	3.70458834	3.72341372	6.08509927	1.68299089	17:41:19	0.51927979	2.2%	
71.8027106	230.237814	83.8346304	371.325203	193.897213	359.672365	352.900182	160.175126	70.5997829	70.1057509	82.3579639	70.3652781	70.1690735	83.7725739	4186.68084	4186.68084	0.0363887	0.09266266	0.89897057	0.27216026	-0.08648089	0.3424752	3.69561903	3.70962538	5.93740566	1.535297277	17:51:19	0.48069063	2.0%	
71.1620996	227.174759	83.2124313	363.719136	191.885778	354.355069	346.561736	157.7681	70.5540804	70.0762853	82.093911	70.373306	70.1629381	83.8984524	4186.58299	4186.58299	0.03719003	0.09485441	0.89276729	0.31179734	-0.08260915	0.33826346	3.65422449	3.71853567	5.79780114	1.395692759	18:01:19	0.45312869	1.9%	
71.4249683	223.432499	82.9290732	357.483132	189.94687	349.169033	340.814492	155.441641	70.5783815	70.1147564	81.9395949	70.4076062	70.1801617	83.6238851	4186.56787	4186.56787	0.03601559	0.09488841	0.89310413	0.27577086	-0.0734237	0.34135403	3.70094455	3.71154316	5.65433648	1.252228096	18:11:19	0.43076279	1.8%	
71.5169933	220.885569	82.5391557	352.282766	187.715183	343.902434	335.424903	153.141932	70.5488258	70.0864439	84.2026489	70.3830467	70.1997578	84.9342081	4186.47632	4186.47632	0.03578697	0.09410549	0.90158662	0.27317078	-0.08578829	0.34577476	3.63959692	3.65174777	5.52510354	1.12299516	18:21:19	0.41230212	1.7%	
71.9476198	218.298866	81.9104069	346.740672	185.86746	338.033031	330.424227	151.085305	70.6023379	70.1349688	87.0171237	70.4736345	70.2570281	86.320246	4186.43213	4186.43213	0.03541413	0.09366136	0.90692689	0.26590417	-0.09574581	0.30407535	3.79799076	3.71106125	5.3891215	0.987013116	18:31:19	0.40867964	1.7%	
71.6444374	213.486997	81.4028976	339.760033	183.883989	331.459919	325.527295	149.377029	70.6605032	70.1535713	87.9105265	70.52264	70.3110375	85.634542	4186.43428	4186.43428	0.03362092	0.09412505	0.91064198	0.18077132	-0.08494809	0.34696231	3.68975751	3.71482633	5.28603265	0.883924269	18:41:19	0.36830383	1.6%	
71.4113529	208.679465	81.0446062	331.54996	181.360687	323.768204	319.660574	147.640668	70.6651371	70.189867	85.1075482	70.5568467	70.3502464	79.9297922	4186.46193	4186.46193	0.03394938	0.09359044	0.88928578	0.15362373	-0.08078114	0.31714084	3.69255222	3.71248565	5.17503091	0.772922532	18:51:19	0.35007263	1.5%	
71.1959176	204.891857	80.4539499	323.86837	178.344214	315.639978	314.151756	145.540803	70.6512164	70.1855246	81.7208773	70.4883611	70.2821705	83.0531869	4186.42593	4186.42593	0.03422689	0.09546249	0.85624588	0.13778479	-0.06872312	0.2977811	3.66646878	3.71115304	5.08629673	0.684188347	19:01:19	0.30282477	1.3%	
71.1798707	201.294351	80.0591427	316.529125	175.850115	307.517198	308.689079	143.405361	70.6863936	70.1952983	85.5895581	70.4902194	70.3115222	84.9372243	4186.449	4186.449	0.03382791	0.09578785	0.87843066	0.16162835	-0.08515246	0.29603543	3.65308038	3.70373107	4.97986816	0.577759777	19:11:19	0.30616449	1.3%	
71.2326952	198.834497	79.7307581	309.909984	172.966662	299.608235	303.567183	141.369729	70.7629697	70.2277357	86.582042	70.5622211	70.3702005	85.1819235	4186.41485	4186.41485	0.03230724	0.09506833	0.89557266	0.2197385	-0.06560075	0.31639339	3.80173453	3.68877403	4.88924898	0.487140595	19:21:19	0.28578194	1.2%	
71.0417954	196.149147	79.4241601	305.334886	170.602179	292.361783	298.588718	139.354068	70.7386234	70.1896358	82.4620297	70.5761915	70.3508483	82.8445289	4186.42826	4186.42826	0.03056998	0.09213714	0.88354719	0.25017878	-0.08348341	0.35170267	3.63030634	3.71788494	4.77618604	0.374077655	19:31:19	0.31011069	1.3%	
71.0780671	193.917992	79.0045243	300.176937	168.517966	285.801921	293.617657	137.3498	70.7395003	70.1838475	81.0000884	70.5125087	70.3246492	82.1743206	4186.40403	4186.40403	0.03301526	0.09421649	0.88486505	0.21070066	-0.05566593	0.33802988	3.67015846	3.68950836	4.68696831	0.284859928	19:41:19	0.29289985	1.2%	
70.9371694	191.670995	78.7692011	295.919998	166.605977	279.870359	289.122005	135.659005	70.7568449	70.2041129	82.6912702	70.4969501	70.3090892	81.2398172	4186.37943	4186.37943	0.03068811	0.09504869	0.92659889	0.30283897	-0.07860116	0.30102165	3.87326279	3.70803706	4.58750603	0.185397651	19:51:19	0.30174294	1.3%	
70.9249603	189.577359	78.6184914	291.944966	164.850649	274.650644	284.632561	133.862654	70.7537972	70.1960653	83.3711403	70.5030655	70.3222866	83.1174614	4186.3662	4186.3662	0.03082118	0.09467737	0.91343997	0.26081754	-0.07754523	0.30876162	3.84090804	3.74644019	4.51038097	0.108272589	20:01:20	0.26580507	1.1%	
70.8615485	185.031727	78.6490768	284.831415	163.498454	268.914203	280.351152	133.032498	70.6683063	70.1851218	83.6900452	70.4962889	70.3138432	84.4887997	4186.29547	4186.29547	0.03020084	0.09596452	0.9025873	0.32125528	-0.08670797	0.29552402	3.8306176	3.73179786	4.43265763	0.030549245	20:11:20	0.25431068	1.1%	
70.838121	180.846164	78.6145404	278.449647	160.743224	262.366753	273.440473	132.042633	70.6244683	70.1287757	83.792957	70.4291212	70.2924923	84.9927587	4186.20206	4186.20206	0.02926706	0.09430042	0.89618241	0.30539364	-0.08558392	0.33368291	3.73806424	3.71658183	4.40210838	0	20:21:20	0.18539765	0.8%	

Time	Flue	Room	Tunnel	DGM 1	DGM 1	Filter 1	DGM 2	DGM 2	Filter 2	DGM 3	Filter 3	Meter #1	Meter #2	Draft	Tunnel	CO	CO2	O2	scale	0.552509	Meter	Meter		
																%	%	%	Lbs	Corrected	#1	#2	Draft	Calculated
10.0	Temp 1	Temp 2	Dry Bulb 3	In 13	Out 14	15	In 16	Out 17	18	In 19	20	21	22	23	24	25	25	27	28	Scale	Cu Ft	Cu Ft		Tunnel
0.0	419.2181	89.18611	128.2592	69.55609	69.45858	74.31028	69.49233	69.55692	80.04581			936.075	794.347	0.062008	0.087796				23.74	23.19	33.04	28.04	-0.234498	-0.22805
10.0	671.5986	87.32386	145.1168	70.26442	69.66864	84.52286	70.0982	69.78698	83.75349			937.287	795.582	0.083581	0.085799				20.07	19.52	33.09	28.08	-0.229105	-0.22855
20.0	542.9139	84.51722	132.8713	70.31331	69.75588	83.13214	70.12419	69.82755	86.36781			938.487	796.798	0.075163	0.09079				18.00	17.45	33.13	28.13	-0.231209	-0.2273
30.0	506.971	88.32697	127.0238	70.31475	69.78815	84.00329	70.13812	69.8569	83.16046			939.698	798.018	0.074251	0.088318				16.34	15.79	33.17	28.17	-0.231437	-0.22792
40.0	497.291	87.91034	122.3316	70.4104	69.87841	86.18109	70.22753	69.92174	82.42186			940.906	799.244	0.071358	0.089086				14.87	14.32	33.21	28.21	-0.23216	-0.22773
50.0	495.345	85.23167	128.5033	70.55694	69.96666	86.52434	70.36742	70.0529	83.79539			942.110	800.459	0.071623	0.089621				13.36	12.81	33.26	28.26	-0.232094	-0.22759
60.0	488.6891	85.32414	127.1913	70.49809	70.01278	83.94543	70.27607	70.03819	81.62949			943.328	801.682	0.072386	0.089572				11.93	11.38	33.30	28.30	-0.231903	-0.22761
70.0	535.3289	83.93346	128.8955	70.60057	70.0753	86.83984	70.31483	70.08613	86.07513			944.540	802.904	0.075749	0.08721				10.39	9.84	33.34	28.34	-0.231063	-0.2282
80.0	524.7034	77.20162	125.1468	70.62623	70.08096	84.70631	70.39423	70.16345	84.32874			945.737	804.118	0.072449	0.090432				8.44	7.88	33.38	28.39	-0.231888	-0.22739
90.0	478.2498	79.27681	119.3581	70.58605	70.08118	81.68672	70.33488	70.12451	80.55529			946.936	805.337	0.068093	0.091326				7.24	6.69	33.43	28.43	-0.232977	-0.22717
100.0	436.6659	82.84087	119.7507	70.68163	70.10472	84.75056	70.41798	70.19178	87.35675			948.135	806.559	0.063227	0.089879				6.47	5.92	33.47	28.47	-0.234193	-0.22753
110.0	421.8905	86.08546	114.307	70.72427	70.17819	86.21809	70.4852	70.24276	86.42839			949.343	807.783	0.063537	0.090748				5.69	5.14	33.51	28.51	-0.234116	-0.22731
120.0	387.9299	83.21831	114.3773	70.79365	70.23009	86.32245	70.52001	70.30383	81.76684			950.547	809.010	0.058094	0.091219				5.30	4.75	33.55	28.56	-0.235476	-0.2272
130.0	352.2411	84.25754	110.0272	70.79027	70.24005	85.60916	70.54704	70.32711	83.58407			951.778	810.264	0.054858	0.092213				5.03	4.48	33.60	28.60	-0.236286	-0.22695
140.0	326.4492	81.29328	102.4147	70.85099	70.30911	84.96336	70.5707	70.38368	87.35371			953.005	811.509	0.050038	0.093604				5.01	4.45	33.64	28.65	-0.237491	-0.2266
150.0	305.7909	79.86966	98.8466	70.88668	70.31274	85.63375	70.61889	70.39105	83.00492			954.246	812.760	0.046774	0.091828				4.79	4.23	33.68	28.69	-0.238306	-0.22704
160.0	287.7452	79.36388	95.93581	70.88798	70.39152	85.8983	70.68391	70.45983	81.1362			955.507	814.038	0.046019	0.093398				4.53	3.97	33.73	28.74	-0.238495	-0.22665
170.0	276.5903	79.25499	93.66213	70.90273	70.37794	84.533	70.67117	70.46	83.00638			956.762	815.314	0.043946	0.091741				4.33	3.78	33.77	28.78	-0.239013	-0.22706
180.0	268.0645	78.59238	92.3304	70.895	70.35438	83.63639	70.64762	70.49018	84.13944			958.012	816.589	0.041802	0.092378				4.10	3.55	33.82	28.83	-0.239549	-0.22691
190.0	263.8126	78.20617	91.27044	70.89963	70.35318	83.58596	70.63808	70.48148	85.33411			959.269	817.872	0.04242	0.091956				3.88	3.32	33.86	28.87	-0.239395	-0.22701
200.0	260.5094	78.107	90.52977	70.9067	70.34318	83.57313	70.61309	70.44898	85.57509			960.526	819.161	0.041498	0.092651				3.66	3.11	33.91	28.92	-0.239625	-0.22684
210.0	257.7934	78.03686	89.63125	70.89128	70.35775	83.5123	70.62058	70.44939	84.92481			961.790	820.453	0.041982	0.093522				3.43	2.88	33.95	28.96	-0.239504	-0.22662
220.0	255.746	74.10031	88.57379	70.87164	70.35642	83.41291	70.61009	70.42807	85.29186			963.074	821.748	0.041772	0.092126				3.15	2.60	34.00	29.01	-0.239557	-0.22697
230.0	250.3058	73.00061	87.91954	70.85493	70.33263	82.86037	70.5863	70.40469	84.46858			964.347	823.042	0.040266	0.093433				2.90	2.35	34.04	29.05	-0.239934	-0.22664
240.0	247.3797	72.3504	87.25946	70.77218	70.3036	83.03888	70.53936	70.38982	84.50758			965.623	824.335	0.038626	0.091815				2.68	2.13	34.09	29.10	-0.240344	-0.22705
250.0	246.6827	71.69773	87.85398	70.71424	70.2319	83.09967	70.44518	70.29897	84.37147			966.885	825.636	0.040691	0.093904				2.47	1.92	34.13	29.14	-0.239827	-0.22652
260.0	244.2336	71.583	87.68529	70.62403	70.16874	83.0361	70.38078	70.24206	84.2765			968.162	826.936	0.041638	0.094983				2.28	1.73	34.18	29.19	-0.239591	-0.22625
270.0	239.5609	71.60607	85.30835	70.64753	70.16142	82.65506	70.36804	70.22682	84.60174			969.437	828.225	0.038471	0.093908				2.12	1.56	34.22	29.24	-0.240382	-0.22652
280.0	233.8264	71.56245	84.43104	70.58973	70.09444	82.4287	70.33939	70.18151	83.91193			970.711	829.525	0.03943	0.095576				1.95	1.40	34.27	29.28	-0.240143	-0.22611
290.0	230.2378	71.80271	83.83463	70.59978	70.10575	82.35796	70.36528	70.16907	83.77257			971.986	830.825	0.036389	0.092663				1.80	1.25	34.31	29.33	-0.240903	-0.22683
300.0	227.1748	71.1621	83.21243	70.55408	70.07629	82.09391	70.37331	70.16294	83.89845			973.246	832.117	0.03719	0.094854				1.66	1.11	34.36	29.37	-0.240702	-0.22629
310.0	223.4325	71.42497	82.92907	70.57838	70.11476	81.93959	70.40761	70.18016	83.62389			974.522	833.417	0.036016	0.094888				1.52	0.97	34.40	29.42	-0.240996	-0.22628
320.0	220.8856	71.51699	82.53916	70.54883	70.08644	84.20265	70.38305	70.19976	84.93421			975.778	834.704	0.035787	0.094105				1.39	0.84	34.44	29.47	-0.241053	-0.22647
330.0	218.2989	71.94762	81.91041	70.60234	70.13497	87.01712	70.47363	70.25703	86.32025			977.030	835.982	0.035414	0.093661				1.25	0.70	34.49	29.51	-0.241146	-0.22658
340.0	213.487	71.64444	81.4029	70.6605	70.15357	87.91053	70.52264	70.31104	85.63454			978.305	837.281	0.033621	0.094125				1.15	0.60	34.53	29.56	-0.241595	-0.22647
350.0	208.6795	71.41135	81.04461	70.66514	70.18987	85.10755	70.55685	70.35025	81.1372			979.559	838.574	0.033949	0.09359				1.04	0.49	34.58	29.60	-0.241513	-0.2266
360.0	204.8919	71.19592	80.45395	70.65122	70.18552	81.72088	70.48836	70.28217	83.05319			980.835	839.870	0.034227	0.095462				0.95	0.40	34.62	29.65	-0.241443	-0.22613
370.0	201.2944	71.17987	80.05914	70.68639	70.1953	85.58956	70.49022	70.31152	84.93722			982.081	841.165	0.033828	0.095788				0.85	0.29	34.67	29.69	-0.241543	-0.22605
380.0	198.8345	71.2327	79.73076	70.76297	70.22774	86.58204	70.56222	70.3702	85.18192			983.365	842.455	0.032307	0.095068				0.75	0.20	34.71	29.74	-0.241923	-0.22623
390.0	196.1491	71.0418	79.42416	70.73862	70.18964	82.46203	70.57619	70.35085	82.84453			984.642	843.751	0.03057	0.092137				0.64	0.09	34.76	29.78	-0.242358	-0.22697
400.0	193.918	71.07807	79.00452	70.7395	70.18385	81.00009	70.51251	70.32465	82.17432			985.920	845.050	0.033015	0.094216				0.55	0.00	34.80	29.83	-0.241746	-0.22645
410.0	191.671	70.93717	78.7692	70.75684	70.20411	82.69127	70.49695	70.30909	81.23982			987.212	846.335	0.030688	0.095049				0.45	-0.10	34.85	29.88	-0.242328	-0.22624
420.0	189.5774	70.92496	78.61849	70.7538	70.19607	83.37114	70.50307	70.32229	83.11746			988.547	847.641	0.030821	0.094677				0.38	-0.18	34.90	29.92	-0.242295	-0.22633
430.0	185.0317	70.86155	78.64908	70.66831	70.18512	83.69005	70.49629	70.31384	84.4888			989.843	848.946	0.030201	0.095965				0.30	-0.25	34.94	29.97	-0.24245	-0.22601
440.0	180.8462	70.83812	78.61454	70.62447	70.12878	83.79296	70.42912	70.29249	84.99276			991.134	850.244	0.029267	0.0943				0.27	-0.28	34.99	30.01	-0.242683	-0.22642

Intertek Testing Services

Manufacturer:	**SBI**				RESULTS		
Model:	**2.5R Series**						
Date:	**11-2-21**				**Average emission rate:(gr/hr)**		**0.998**
Run:	**1 - Low**						
Project #:	**G104845527**			Burn Rate (Dry kg/hr):			1.201
Test Duration: (minutes)	**440**						
	PRESSURE FACTOR:	1.00267	BAROMETRIC PRESSURE				
						Average:	30
TEMPERATURE FACTORS						Start:	30
	DGM #1:	0.99547				End:	30
	DGM #2:	0.99559					
			DRY GAS METER VALUES				
VOLUMES SAMPLED			Avg sample flow rate (dscfm)	DGM #1		Final:	991.134
	DGM #1:	55.50594	0.126149874			Initial:	936.075
	DGM #2:	56.18996	0.127704446				
				DGM #2		Final:	850.244
TOTAL TUNNEL VOLUME (scf):		145964				Initial:	794.347
SAMPLE RATIOS			TEMPERATURES (DEG. RANKIN)				
	Sample Train 1:	2629.698				DGM #1:	530.400
	Sample Train 2:	2597.686				DGM #2:	530.338
TOTAL EMISSIONS			CALIBRATION FACTORS				
	Sample Train 1 (g):	**7.363**				DGM #1:	1.0100
	Sample Train 2 (g):	**7.274**				DGM #2:	1.0070
EMISSION RATES			TUNNEL FLOW RATE:				331.736
	Sample Train 1 (g/hr):	**1.00**					
	Sample Train 2 (g/hr):	**0.99**	PARTICULATE CATCH (mg)				
					Total Sample Train 1:		2.8
					Total Sample Train 2:		2.8
					Filter and seal Sample Train 1:		2.6
	MAX Allowed	7.50%			Filter and seal Sample Train 2:		2.6
					Probe Sample Train 1:		0.2
DEVIATION:		0.61%			Probe Sample Train 2:		0.2

	Room Temp		Bar Pressure		Relative Humidity		Air Velocity	
	Before	After	Before	After	Before	After	Before	After
	89	0	30.00	30.00	32.2	32.2	0	0

Average Dilution Tunnel Measurements						Sample Data	
Burn	Velocity	Flow Rate	Temp	Total Sample		Particulate Catch	
Time	(Ft/sec)	(dscf/min)	(R)	1	2	1	2
440	17.04	331.74	557.71	55.51	56.19	2.80	2.80

	Dilution Tunnel Dual Train Precision						
	Sample Ratios		Total Emissions (g)				
	Train 1	Train 2	Train 1	Train 2	Deviation (%)		
	2629.70	2597.69	7.36	7.27	0.61%		

Burn				Initial		Run	Average
Rate		Surface		Draft		Time	Draft
1.201		0.000		0.062		440.000	0.047

Run	Date	Burn Rate	Emission
1 - Low	2021-11-02	1.201	0.998

E&E Boiler Tunnel Traverse Worksheet

Static Pressure: **0.172**

Barometer: 30

	TUNNEL VELOCITY	TUNNEL TEMP	SQUARE ROOT
A CENTER	0.091	68.300	0.3017
B CENTER	0.092	37.900	0.3033
A1	0.088	68.100	0.2966
A2	0.096	68.100	0.3098
A3	0.078	68.100	0.2793
A4	0.072	68.000	0.2683
B1	0.081	68.000	0.2846
B2	0.096	68.000	0.3098
B3	0.087	68.000	0.2950
B4	0.076	67.900	0.2757
AVERAGE		65.04	0.2924

PITOT CONSTANT= 0.9667

E&E FUEL LOAD DATA SHEET

			Test Load Weight: Lower	Ideal	Upper	
Firebox Volume:	1.94	cu. ft	22.12	23.28	24.44	
Load Volume:	1.9400	cu. ft	Loading Density:	12.238	lbs./ft3	
Number of Spacers:			Load Density:	12.238	lbs./ft3	

Piece Size: Thick	x	Wide	x	Length	Weight lbs	Meter Moisture Content Dry Uncorrected %			
2		4		16.25	3.99	24.20	20.00	16.60	85.31
2		4		15.5	3.77	20.50	18.80	22.40	81.38
2		4		15.75	3.65	22.70	22.70	17.00	82.69
2		4		16	6.33	22.30	22.40	19.20	84.00
2		4		16.25	3.17	12.10	24.50	18.10	85.31
2		4		15.75	2.84	21.70	22.00	24.40	82.69
									0.00
									0.00
									0.00

Test Load Weigh 23.741 lbs. **Dry Weigh** 8.926 kg.

Average Moisture Content: %

Dry: 20.64 | 20.644 | Wet: 17.112

Pre-test moisture content: %

#DIV/0! | #DIV/0! | Wet: #DIV/0!

Coal Bed Range: 4.8 lbs. to 5.9 lbs. 20% to 25% of test load

For Usable Firebox Volumes up to 3.0 ft^3 - Low and Medium Fire

Nominal Required Load Density (wet basis)	12	lb/ft^3				
Usable Firebox Volume	1.94	ft^3				
Total Nom. Load Wt. Target	23.28	lb				
Total Load Wt. Allowable Range	22.12	to	24.44	lb		
Core Target Wt. Allowable Range	10.476	to	15.13	lb		
Remainder Load Wt. Allowable Range	8.15	to	12.80	lb		
						Mid-Point
Core Load Fuel Pc. Wt. Allowable Range	3.49	to	5.82	lb		4.66
Remainder Load Pc. Wt. Allowable Range	2.33	to	6.98	lb		4.66
	Pc. #					Ordre
Core Load Piece Wt. Actual	1	3.99	**4**	In Range		
	2	3.77	**3.5**	In Range		
	3	3.65	**3.5**	In Range		
Core Load Total. Wt. Actual		11.41		In Range		
	Pc. #					
Remainder Load Piece Wt.	1	6.33	**6.5**	In Range		
(2 or 3 Pcs.)	2	3.17	**3**	In Range		
	3	2.84	**2.5**	In Range		
Remainder Load Piece Weight Ratio - Small/Large		45%		In Range		≤ 60%
Remainder Load Tot. Wt. Act		12.33	lb	In Range		
Total Load Wt. Actual		23.74	lb	In Range		
Core % of Total Wt.		48%		In Range		45-65%
Remainder % of Total Wt.		52%		In Range		35-55%
Actual Load % of Nominal Target		102%		In Range		95-105%
Actual Fuel Load Density		12.2	lb/ft^3			
Allowable Charcoal Bed Wt. Range (lb)	2.4	to	4.7			Mid-Point
Actual Charcoal Bed Wt.		4.1	lb	In Range		3.6
Actual Fuel Load Ending Wt.		0.3	lb	lb		≥ 90%
Total Wt. of Fuel Burned During Test Run lb.		23.5	lb			

Fuel Piece Moisture Reading (%-dry basis)

1	2	3	Ave.		Pc. Wt. Dry Basis			
24.2	20	16.6	20.3	In Range	3.32	lb	1.50	kg
20.5	18.8	22.4	20.6	In Range	3.13	lb	1.42	kg
22.7	22.7	17	20.8	In Range	3.02	lb	1.37	kg
22.3	22.4	19.2	21.3	In Range	5.22	lb	2.37	kg
12.1	24.5	18.1	18.2	In Range	2.68	lb	1.22	kg
21.7	22	24.4	22.7	In Range	2.31	lb	1.05	kg
Total Load Ave. MC % (dry basis)			20.7	In Range				
Total Load Ave. MC % (wet basis)			17.1					
Total Test Load Weight (dry basis) →					19.67	lb	8.92	kg
Total Fuel Weight Burned During Test Run (dry basis)					19.4	lb	8.80	kg

Time	Flue	Room	Tunnel	DGM 3	DGM 3	Filter 3			
10.0	Temp 1	Temp 2	Dry Bulb 3	In 13	Out 14	15			
0.0	419.2181	89.18611	128.2592	71.09944	71.09944	75.27789			
10.0	671.5986	87.32386	145.1168	70.95706	70.95706	85.7127			
20.0	542.9139	84.51722	132.8713	71.02176	71.02176	86.27567			
30.0	506.971	88.32697	127.0238	71.11023	71.11023	85.45594			
40.0	497.291	87.91034	122.3316	71.19044	71.19044	85.78892			
50.0	495.345	85.23167	128.5033	71.42186	71.42186	87.50978			
60.0	488.6891	85.32414	127.1913	71.28475	71.28475	85.50106			

Meter #1	Meter #2	Draft	Tunnel	CO	CO2	O2	scale	11.930503	Meter	Meter		
21	22	23	24	% 25	% 25	% 27	Lbs 28	Corrected Scale	#1 Cu Ft	#2 Cu Ft	Draft	Calculated Tunnel
231.022		0.062008	0.087796				23.74	11.81	8.16	0.00	-0.234498	-0.22805
232.215		0.083581	0.085799				20.07	8.14	8.20		-0.229105	-0.22855
233.443		0.075163	0.09079				18.00	6.07	8.24		-0.231209	-0.2273
234.675		0.074251	0.088318				16.34	4.41	8.28		-0.231437	-0.22792
235.902		0.071358	0.089086				14.87	2.94	8.33		-0.23216	-0.22773
237.130		0.071623	0.089621				13.36	1.43	8.37		-0.232094	-0.22759
238.360		0.072386	0.089572				11.93	0.00	8.41		-0.231903	-0.22761

Intertek Testing Services

Manufacturer:	**SBI**		RESULTS		
Model:	**2.5R Series**		**Average emission rate:(gr/hr)**		**#DIV/0!**
Date:	**11-2-21**		Burn Rate (Dry kg/hr):		#VALEUR!
Run:	**1 - LOW - 1st hour**				
Project #:	**G104845527**				
Test Duration: (minutes)	**60**				
PRESSURE FACTOR:		1.00267	BAROMETRIC PRESSURE		
			Average:		30
TEMPERATURE FACTORS			Start:		30
DGM #3:		0.99406	End:		30
DGM #2:		1.14783			
			DRY GAS METER VALUES		
VOLUMES SAMPLED			DGM #1	Final:	238.360
DGM #3:		7.18958		Initial:	231.022
DGM #2:		0.00000			
SAMPLE FLOW (dscfm)		0.11983	DGM #2	Final:	0.000
TOTAL TUNNEL VOLUME (scf):		18958		Initial:	0.000
SAMPLE RATIOS			TEMPERATURES (DEG. RANKIN)		
Sample Train 3:		2636.843		DGM #1:	531.155
Sample Train 2:		#DIV/0!		DGM #2:	460.000
TOTAL EMISSIONS			CALIBRATION FACTORS		
Sample Train 3 (g):		**5.537**		DGM #1:	0.9830
Sample Train 2 (g):		**#DIV/0!**		DGM #2:	0.0000
EMISSION RATES			TUNNEL FLOW RATE:		315.963
Sample Train 3 (g/hr):		**5.54**			
Sample Train 2 (g/hr):		**#DIV/0!**	PARTICULATE CATCH (mg)		
			Total Sample Train 3:		2.1
			Total Sample Train 2:		
			Filter and seal Sample Train 3:		2
MAX Allowed		7.50%	Filter and seal Sample Train 2:		
			Probe Sample Train 3:		0.1
DEVIATION:		#DIV/0!	Probe Sample Train 2:		

Ambient	Flue	Dilution Tunnel	Firebox Top	Firebox Back	Firebox Right	Firebox Left	Firebox Bottom	DGM Inlet 1	DGM Outlet 1	Probe Temp 1	DGM inlet 2	DGM outlet 2	Probe Temp 2	Probe Temp 3	DGM Inlet 3	Manometre Dr	Manometre Tr	Trans Vaccum	Trans Pressio	Trans Pressio	Trans Vacuum	Massflow 1	Massflow 2	Balance	Weigth for BR	Date
69.4323426	70.9087357	69.1856199	71.0190897	73.7360793	73.4973602	73.4199992	72.1118986	69.4423443	69.4394271	82.167848	69.3577454	69.4481785	83.3856398	84.1617725	70.5359871	0.00150823	0.09283308	0.3923768	0.25877381	-0.21060363	-0.06739363	0.01470015	0.20668463	8.90060865		10:12:13
69.5763924	132.837395	78.1524611	72.2707435	73.6972678	73.5005516	73.3982348	72.1013576	69.4418187	69.4888818	83.1910081	69.6330639	69.5159688	83.5762574	84.9961644	70.637895	0.02301296	0.09469213	0.7688049	0.26442814	-0.20075965	0.34942592	3.51117289	3.50132829	8.82164777		10:13:13
69.6565755	170.899649	83.8970696	76.4477707	73.6467074	73.7427735	73.5369118	72.0882156	69.8019961	69.4428015	84.1469219	69.6274069	69.5173957	83.7564098	85.745365	70.6547314	0.02856537	0.09347845	0.78083781	0.25872839	-0.20196318	0.35891893	3.49575362	3.51076803	8.71031821		10:14:13
69.9972535	202.1328388	77.9105694	84.2824421	73.6095454	74.8252334	74.3251614	72.03729	69.8589296	69.479742	85.0181051	69.6455929	69.5080793	83.8857524	86.3910768	70.700813	0.0346013	0.09349486	0.77622776	0.27198995	-0.18364906	0.26101628	3.51046151	3.48839885	8.54638493		10:15:13
70.0046514	241.32738	80.2930754	96.2294467	73.6081965	76.5177049	75.5835212	71.9327168	69.857995	69.4613045	85.3677477	69.662576	69.5288139	83.8988899	86.7094862	70.6948809	0.04091151	0.09222965	0.76928441	0.26631292	-0.18262719	0.34992011	3.48486981	3.47716427	8.42452397		10:16:13
70.1055064	266.793306	81.7216738	112.965713	73.6244508	78.6490312	77.2904206	71.8116241	69.8451135	69.4530047	84.9924052	69.6396926	69.5034287	83.9216772	86.7186083	70.6724254	0.0439678	0.09453728	0.76008891	0.2726712	-0.20422264	0.32760503	3.46362343	3.47536614	8.2902958		10:17:13
70.2790049	306.047208	85.5816799	133.482701	73.7772736	81.3590312	79.5715788	71.7318997	69.8878108	69.4669558	84.4827484	69.6640598	69.5482166	84.0798957	86.6985648	70.7088586	0.05135289	0.09374458	0.79308209	0.28924815	-0.19176722	0.29879162	3.51087785	3.48539597	8.14207357		10:18:13
70.5130588	358.736481	90.9480825	159.269036	73.9967882	84.5422566	82.6551212	71.6602552	69.9023492	69.4573269	83.9578211	69.6815166	69.5240029	84.2097336	86.6092935	70.6534216	0.05750227	0.09200481	0.7780767	0.27690627	-0.19278909	0.35941804	3.49383911	3.48045564	7.95346732		10:19:13
70.6236195	394.768034	94.05219	191.927334	74.3894576	88.2797317	86.9907305	71.6158973	69.8833693	69.4937679	83.5997278	69.6971197	69.5350233	84.4576614	86.6904435	70.6790131	0.05913734	0.08828024	0.77113827	0.2977637	-0.17838077	0.2788	3.48389617	3.47975245	7.75703424		10:20:13
70.7459289	400.170815	94.9929082	227.294311	74.8981041	93.1700238	92.4424458	71.5691338	69.8807317	69.4623756	83.2677309	69.6623969	69.5269679	84.6150876	86.6808061	70.6855393	0.05754714	0.08968117	0.76241975	0.27179963	-0.17433872	0.29110329	3.48516321	3.4847272	7.58406938		10:21:13
70.9179245	406.506209	96.2695496	260.618391	75.5883274	98.7612244	98.3531444	71.5928622	69.8811473	69.463208	82.9680957	69.6669795	69.5290505	84.7114375	86.6378438	70.693868	0.05989565	0.09179825	0.7860281	0.30533687	-0.1703875	0.30417615	3.48021468	3.46905058	7.41302639		10:22:13
71.0998967	411.861201	97.0790916	292.555565	76.4336335	104.215918	104.134857	71.642814	69.8544778	69.4707053	82.7747946	69.6590585	69.5086274	84.7660166	86.5630685	70.6509657	0.05983945	0.0899189	0.79047588	0.29516362	-0.16443797	0.35651924	3.47146666	3.45994031	7.25085518		10:23:13
71.3105415	418.53474	98.4397287	320.46235	77.3943497	109.364241	109.044439	71.7547495	69.8402674	69.4469075	82.5205784	69.6240119	69.5006655	84.8805091	86.352327	70.6188514	0.06097604	0.08935245	0.80340122	0.30461021	-0.1625759	0.34847195	3.47545957	3.497814	7.09346612		10:24:13
71.5624013	428.905765	99.8938138	347.292168	78.5537499	114.421025	113.664607	71.9124871	69.8210786	69.4143794	82.277115	69.5939868	69.4743891	85.142199	86.3167729	70.58176	0.0623745	0.08906803	0.78352516	0.30651769	-0.15835218	0.34651729	3.47960165	3.50242487	6.92742247		10:25:13
71.8163339	441.767003	101.165647	373.64727	79.8273187	119.174527	117.974915	72.1655437	69.8210785	69.4514688	82.0696687	69.6035709	69.4685548	85.3121065	86.2461205	70.6055007	0.06544743	0.08979351	0.79770197	0.29661694	-0.15753469	0.29798763	3.47468918	3.48621061	6.75846118		10:26:13
72.0205	439.229641	101.256464	398.692355	81.1764842	123.630245	121.882663	72.469547	69.786706	69.411256	81.8847722	69.567528	69.4562635	85.6088673	86.2157538	70.5869684	0.06301489	0.08977718	0.78346123	0.28556943	-0.16246236	0.3869736	3.47304022	3.48504192	6.59802896		10:27:13
72.3071377	439.970669	101.920422	420.288492	82.6626441	127.950332	125.693879	72.893002	69.783258	69.4323949	82.1281493	69.5840816	69.4498978	85.8081954	86.2048972	70.6380834	0.06393216	0.09010981	0.78338993	0.28695462	-0.17893712	0.29158765	3.48299301	3.48487309	6.44071215		10:28:13
72.4958787	451.862088	103.707235	439.032074	84.1761171	132.17755	129.634494	73.4023969	69.7789056	69.4255414	82.7324172	69.5643106	69.4509622	85.8439657	86.2749537	70.6595554	0.06690453	0.08821842	0.795349	0.28518339	-0.18505696	0.29592479	3.48008519	3.4759841	6.28460981		10:29:13
72.7504962	498.397361	109.409024	461.655746	85.8092205	136.896973	134.191076	73.9783484	69.7776247	69.4121749	83.4752695	69.5621962	69.4275942	85.8823685	86.4228331	70.6870129	0.0711549	0.08982078	0.79126266	0.28852149	-0.17635974	0.30950168	3.47982457	3.47269273	6.05600885		10:30:13
73.0253339	521.337327	112.722127	492.542485	87.481255	142.154921	139.691737	74.640048	69.8087112	69.4149286	84.3430232	69.5870352	69.4578524	85.9656827	86.5598287	70.6818517	0.07324536	0.08810965	0.82580728	0.29402821	-0.16647034	0.33486063	3.50862405	3.47048974	5.81508984		10:31:13
73.3365533	532.712927	114.504348	526.385919	89.2626083	147.201465	144.736351	75.4035625	69.8341961	69.3979491	85.2457505	69.6054389	69.4545872	86.0256697	86.6825867	70.6860852	0.07412939	0.08813587	0.82719644	0.33176916	-0.18565655	0.34485275	3.49639615	3.4647069	5.56927394		10:32:13
73.5654965	551.339868	117.352682	558.589568	90.9646041	152.01249	149.255585	76.2271251	69.8277108	69.3872623	84.8961701	69.6206141	69.4543523	86.0207774	86.8235846	70.7387485	0.075761	0.08702764	0.83645961	0.33476446	-0.14243377	-0.07262843	0.35207131	0.32848215	5.34482816		10:33:13
73.8365957	575.725883	120.590149	592.196367	92.9541445	158.123565	153.995989	77.1842028	69.8468348	69.4330561	86.4567542	69.7047508	69.5143181	86.1117568	87.2188318	70.7945077	0.07797812	0.08549367	0.92877237	0.31782635	-0.15030214	0.37616665	4.10506169	3.93828535	5.08341186		10:34:09
74.2272002	583.315446	122.353365	623.859351	95.0525642	164.368605	158.473434	78.2244261	69.8711685	69.459895	87.6744465	69.6911682	69.5240707	86.729569	87.428774	70.8080024	0.07860099	0.0879254	0.94457684	0.31989279	-0.15318608	0.36828654	4.14327795	3.98670354	4.83174018		10:35:09
74.5017043	586.819556	123.136912	652.179607	97.3232667	170.769278	164.044094	79.4017191	69.915038	69.4600168	88.4584421	69.731708	69.5350271	87.2546337	87.7137892	70.8518521	0.07844573	0.08744601	0.91827622	0.3451329	-0.14218398	0.37369566	4.06665364	4.01058564	4.5879445		10:36:09
74.9224246	586.120672	123.3166057	675.982814	99.7385991	177.372363	170.131376	80.6793595	69.9451096	69.4575901	89.145533	69.7438654	69.5359343	87.5755492	87.9673412	70.8552574	0.07882397	0.08661432	0.91843849	0.3298049	-0.14199096	0.40165837	4.0683485	4.01657665	4.35756918		10:37:09
75.0691122	585.848391	123.52758	694.489003	102.323847	184.356325	176.585108	82.0616532	69.9350913	69.4682395	89.9287832	69.7388462	69.5404991	87.7596702	88.1068451	70.8960502	0.0781272	0.08974207	0.9185688	0.34538875	-0.13930004	0.36177101	4.06879107	4.01323775	4.13143101		10:38:09
75.6106414	581.809215	123.567465	709.859012	104.96895	192.020317	183.132076	83.5920214	69.9443549	69.4789219	90.3634777	69.7635275	69.5576819	87.883205	88.1705079	70.9228	0.07617522	0.0861718	0.92654234	0.35178639	-0.12097457	0.36500911	4.04436806	4.00788108	3.92989614		10:39:09
75.8255966	577.943644	122.80585	722.466822	107.719896	199.691824	189.867543	85.1427295	69.9224424	69.4403352	89.9405939	69.7324463	69.532015	87.3189601	87.7702559	70.8679986	0.0769207	0.08804949	0.92143318	0.33853618	-0.14186607	0.3351065	3.90888759	3.48313069	3.73206161		10:40:09
76.054309	572.790514	122.487667	732.522306	110.585761	207.501639	196.796768	86.8690367	69.934351	69.4789172	89.0734087	69.778523	69.5830966	86.5910382	87.3543007	70.8740715	0.07624069	0.08911162	0.84961479	0.34389531	-0.11444597	0.32745259	3.49848112	3.4730894	3.55695768		10:41:09
76.3205361	564.654329	121.200189	738.186148	113.456238	215.400773	203.751668	88.8023234	69.9755863	69.477239	88.4094654	69.7726783	69.5751678	85.8109267	86.8475471	70.8436592	0.07441651	0.08879028	0.86007161	0.32888522	-0.12221216	0.29388653	3.47452855	3.47453183	3.39141806		10:42:09
76.6407693	550.851811	119.592956	740.183852	116.30203	223.259281	210.90247	90.7786348	69.9610517	69.497706	87.702824	69.7614756	69.5710481	85.0842998	86.3072505	70.8424573	0.07609799	0.08793302	0.84852559	0.33004334	-0.11225464	0.30038239	3.47419417	3.47916728	3.24539226		10:43:09
76.6813925	534.091343	117.902599	737.853432	119.121659	230.911222	217.902139	92.9443575	69.9437678	69.5178973	86.9448634	69.7503502	69.5588779	84.3700982	85.6980794	70.8189873	0.07722459	0.08791742	0.83784524	0.33154207	-0.11025132	0.30551032	3.47559516	3.47555916	3.14440109		10:44:09
76.8983936	522.610952	116.401964	731.673785	122.102805	238.758842	225.678374	95.1065142	69.9512378	69.4974747	86.2033137	69.7304104	69.5704001	83.8388194	85.1638609	70.8313982	0.07237861	0.09099869	0.8731248	0.33740078	-0.12309778	0.29807368	3.44769767	3.45229706	3.00136301		10:45:09
76.9648673	511.322279	115.46783	723.156321	125.000561	246.36373	232.773731	97.2341167	69.9450316	69.4896002	85.4904731	69.7450373	69.5566919	83.3005592	84.7095071	70.8347731	0.06827883	0.09063884	0.87872324	0.35032171	-0.12853638	0.28393129	3.43442237	3.44646176	2.88318189		10:46:09
77.4562158	503.724508	115.653797	713.474378	127.880146	253.715357	239.550328	99.4544099	69.9644455	69.4927661	84.816851	69.7302858	69.5581909	82.8327189	84.2424267	70.8262762	0.07096852	0.09069652	0.88128274	0.33205301	-0.1025469	0.31412156	3.42745608	3.45396077	2.77375372		10:47:09
77.5627448	494.965834	114.105101	703.528229	130.699899	260.86473	246.119703	101.81981	69.9351371	69.4938722	84.1988536	69.7347252	69.5567967	82.2952303	83.7417438	70.8302968	0.06955896	0.09004169	0.87371735	0.32467286	-0.10200191	0.28964529	3.44558811	3.44672075	2.68033573		10:48:09
77.4915886	495.575851	113.9309897	693.794632	133.428939	267.972609	252.462115	104.322832	69.9153742	69.4691044	83.6137192	69.7095435	69.5495316	81.7923424	83.2068873	70.8063778	0.0714699	0.08872798	0.86578806	0.33665141	-0.10773572	0.3329871	3.45324284	3.45679483	2.57979572		10:49:09
78.3602837	547.256417	124.1437744	684.558568	90.9646041	152.01249	149.255585	76.2271251	69.6277108	69.3872623	84.8961701	69.6206141	69.4543523	84.0230902	83.5787207	70.8048564	0.07303995	0.08774166	0.83870591	0.35235367	-0.12572275	0.35207225	3.50284825	3.50257257	5.34482816		10:50:09
79.436847	487.124573	162.471132	678.997369	143.143342	281.757974	264.104266	109.809423	69.9299183	69.4949032	83.5027926	69.7295059	69.5561608	82.4792505	84.1713367	70.8088383	0.06605299	0.08389037	0.88975539	0.3727233	-0.09643841	0.33433693	3.42104709	3.44362607	21.3016146	16.6140618	10:51:09
80.4864477	585.848204	195.417514	661.866923	149.463784	288.395729	269.466868	113.365467	69.9382304	69.5036337	83.9495974	69.7069845	69.5590571	83.414222	85.3940278	70.8213115	0.08408585	0.07736319	0.89370159	0.35858748	-0.10124119	0.30301811	3.42807731	3.43845135	20.9053104	16.5086767	10:52:09
80.7787141	612.281316	149.636098	663.798554	153.006304	294.906189	275.055875	117.289405	69.9175151	69.4641614	84.195836	69.6766832	69.529587	83.6965251	86.0541715	70.8293408	0.07956225	0.08435471	0.88605752	0.39261564	-0.10484043	0.32307366	3.44199678	3.45347067	20.4540421	16.0574084	10:53:09
79.1058532	623.893807	148.338062	679.542962	154.947635	300.507929	280.287504	120.948317	69.9485961	69.4994164	83.9210036	69.7298518	69.5410883	83.3727923	85.5820495	70.8612411	0.08251669	0.08583145	0.88858014	0.36826115	-0.08910368	0.28971659	3.47574314	3.44388014	20.1255773	15.7289436	10:54:09
74.8034892	648.310894	146.977762	698.499852	156.889829	306.108451	285.519742	124.607156	69.9977152	69.5036113	83.9077154	69.7451107	69.5442397	83.4211466	85.7327108	70.8651861	0.08354663	0.08315516	0.89140008	0.37299273	-0.07962078	0.4052628	3.50914007	3.48770421	19.8074021	15.4107684	10:55:09
76.2908032	655.211277	147.245748	731.359113	157.801019	310.01765	289.630367	127.442342	69.9620085	69.4803271	83.4639065	69.7007642	69.5465857	83.1233317	85.0790477	70.8579895	0.08365712	0.08580961	0.89563166	0.37716275	-0.09995818	0.31201938	3.46073529	3.45663747	19.5129697	15.116336	10:56:09
75.5316559	668.332102	148.744921	758.797596	159.38857	314.065359	293.669192	129.921335	69.9526429	69.5126319	83.3279822	69.7043147	69.5209663	83.1578972	85.0271698	70.8482116	0.08348995	0.08519637	0.89638157	0.39174138	-0.09128366	0.27836973	3.4644725	3.44956135	19.1976834	14.8010497	10:57:09
74.6888731	670.380541	149.698736	784.021697	161.132443	317.821498	297.234086	132.509512	69.946814	69.4876325	83.2009412	69.6751507	69.5247208	83.1628674	85.040404	70.8044875	0.08306885	0.0859479	0.87498849	0.39286543	-0.09171512	0.31181777	3.43868738	3.44456529	18.8947398	14.4981061	10:58:09
76.2999474	678.24157	151.061863	806.842629	162.992352	321.223003	300.569612	134.862499	69.9303512	69.5095048	83.0761583	69.6599358	69.529924	83.164724	84.9637034	70.8534155	0.08673312	0.08483699	0.88148189	0.39322876	-0.10632781	0.33268469	3.48957246	3.43849232	18.575114	14.1784803	10:59:09
74.8196803	685.917956	151.961426	826.945157	164.844374	324.426437	303.469892	137.27248	69.9212763	69.4616724	82.8552303	69.6425259	69.4912601	83.1921284	84.971236	70.7877061	0.08425693	0.08513892	0.88754257	0.40133557	-0.11029038	0.30104624	3.4527052	3.44268521	18.2497553	13.8531216	11:00:09
75.8305796	707.774993	155.233049	846.185651	166.711497	327.461431	306.330622	139.518382	69.945772	69.4626329	82.7744204	69.6770254	69.5015923	83.3960069	85.0943568	70.8263512	0.08903221	0.08751756	0.89125445	0.41348104	-0.11036986	0.34249459	3.4735896	3.45139289	17.90956	13.5133263	11:01:09
74.8458412	728.677264	158.347817	867.216725	168.845277	330.471525	309.045663	141.417929	69.9062531	69.4637319	82.8444445	69.6708368	69.4883189	83.6510013	85.3387393	70.8376573	0.08866008	0.08515203	0.89534646	0.39171867	-0.10505616	0.33023337	3.45578512	3.43523046	17.5566706	13.1600369	11:02:09
75.0441568	740.732544	160.622398	888.917789	171.289284	333.468171	311.784342	143.307406	69.9334045	69.5067246	82.9699271	69.6809072	69.5108918	83.8806844	85.4789379	70.8452232	0.08805936	0.0827819	0.90618929	0.4019714	-0.09667685	0.30495556	3.44900241	3.43293896	17.2032665	12.8066328	11:03:09
74.3845973	749.030531	163.321239	908.965383	173.452728	337.908798	315.245882	144.709441	69.9134963	69.5001475	83.0755563	69.6622466	69.4980639	84.1997051	85.7679344	70.8386504	0.09005538	0.08555891	0.8921059	0.38702944	-0.13642746	0.3151788	3.45406404	3.42821663	16.8489485	12.4523148	11:04:09
75.3942865	764.528324	166.238982	927.434138	175.409775	342.022604	318.314953	145.976379	69.9165575	69.5069598	83.1510226	69.6782255	69.5057096	84.5178991	86.0358664	70.8417102	0.0911481	0.08415798	0.88715164	0.3873587	-0.11408264	0.33647599	3.43128596	3.4393709	16.472322	12.0756883	11:05:09
74.7105887	775.871682	168.206354	945.086939	177.713362	346.039707	321.490794	147.251708	69.8890004	69.4781492	83.28374	69.6481672	69.4839833	84.740756	86.1620004	70.8491408	0.09010131	0.08384542	0.88700022	0.40656598	-0.11947585	0.29133417	3.46280035	3.42996678	16.1239032	11.7263983	11:06:09
75.2289662	779.958914	169.851335	962.120304	180.39191	350.126858	324.735818	148.733067	69.8837347	69.4712135	83.4420299	69.6646669	69.4795481	85.0621509	86.4838404	70.8368048	0.09327662	0.08413567	0.90529678	0.39595374	-0.13687027	0.33647353	3.4338831	3.45141362	15.7451967	11.3485653	11:07:09
74.9488801	788.948	171.180837	976.450867	182.955701	354.200235	327.887322	150.192149	69.8849693	69.4545289	83.5591133	69.6232988	69.4716149	85.2221289	86.7122708	70.8492831	0.09110513	0.08525155	0.90291185	0.39116232	-0.11622856	0.3385585	3.45482132	3.42508262	15.3793311	10.9826974	11:08:09
75.4551616	791.443212	171.877361	989.909681	185.70546	358.55302	331.142919	151.607528	69.8692712	69.4888353	83.6813032	69.6192663	69.4905022	85.485581	86.8920843	70.8631604	0.09170908	0.08238752	0.89213786	0.39854247	-0.124676	0.29619524	3.45924696	3.4259071	15.0132728	10.6166391	11:09:09
75.9799533	791.311171	172.710396	1001.89565	188.573539	362.854293	334.317773	152.833134	69.8864353	69.4859997	83.800123	69.6443497	69.4605793	85.6067679	87.0511783	70.8694887	0.09126727	0.08213498	0.90184232	0.40666063	-0.13127271	0.29382015	3.44640112	3.42363527	14.6556356	10.2590019	11:10:09
75.000862	791.928066	173.650346	1011.20078	191.797741	367.288602	337.830725	154.665671	69.8895839	69.4483094	83.9629348	69.6254137	69.45206	85.7731447	87.1740664	70.8951239	0.09256806	0.08289371	0.91024613	0.37763962	-0.12849097	0.29071482	3.47743636	3.41178274	14.294376	9.89774227	11:11:09
75.7906029	787.647176	173.321107	1017.88058	195.029081	371.722942	341.345229	156.498693	69.8947233	69.4470511	84.0239638	69.6247106	69.4403533	85.8420638	87.4139242	70.9299507	0.09030911	0.08329596	0.91299186	0.40726788	-0.14035397	0.29399082	3.48033697	3.41178146	13.9350196	9.53888391	11:12:09
76.2165188	783.339529	173.192351	1022.47752	198.047831	376.506357	344.649486	157.681415	69.9487369	69.4678859	84.271502	69.6841575	69.4941397	86.0653027	81.4829812	70.9184347	0.09191554	0.08237771	0.91205081	0.38922077	-0.13190854	0.29258834	3.44430467	3.42609232	13.5971688	9.20053515	11:13:09
76.8829534	780.615729	172.964294	1024.91542	200.983818	381.207181	348.086257	159.163146	69.9311612	69.4557237	84.4368618	69.6836638	69.4898955	86.2024098	80.090226	70.9366811	0.09006831	0.08282993	0.91577573	0.37824138	-0.12363142	0.32607572	3.50643745	3.43900045	13.2488542	8.85222048	11:14:09
77.0358367	778.152409	172.560388	1026.24026	203.766475	386.073948	351.693404	160.915993	69.9312569	69.4479015	84.5262863	69.6575081	69.4937417	86.3553782	79.2540635	70.9580148	0.09099885	0.08190848	0.91161316	0.40174432	-0.11712554	0.32050924	3.47910663	3.38543048	12.9207049	8.52407119	11:15:09
76.0289352	773.804488	172.185936	1026.24472	206.666326	391.117752	355.295852	162.531773	69.9297322	69.4747142	84.6364292	69.6776511	69.5009679	86.3315558	83.103721	70.9366811	0.0893071	0.08077294	0.91368584	0.38734735	-0.13170417	0.28171846	3.40810126	3.41125494	12.5898387	8.19320504	11:16:09
77.0369356	770.10638	171.986684	1025.5449	209.512687	396.092888	358.834224	164.42373	69.9702733	69.4831763	84.8003062	69.699863	69.5002621	86.3783688	83.1981818	83.1981818	0.09148982	0.08128064	0.90013107	0.3734159	-0.12628827	0.30587019	3.39258199	3.39392936	12.2551329	7.85849924	11:17:09
77.1671693	767.716893	171.57404	1024.24591	212.358326	401.066594	362.374073	166.321031	69.9821477	69.4729873	84.9760939	69.7229873	69.5124634	86.4143277	83.1945	83.1945	0.09238773	0.08810849	0.89910374	0.35496366	-0.13139671	0.29229834	3.39273115	3.34516366	11.8091103	7.53347658	11:18:09
77.1367097	765.596221	171.016537	1022.58488	215.247228	406.200869	366.038023	167.931434	69.9695766	69.4820628	84.84882	69.6879159	69.4987318	86.7631081	83.1892	83.1892	0.09356327	0.08300498	0.90021467	0.39220689	-0.11381015	0.30434826	3.36959323	3.38955616	11.6159263	7.21929265	11:19:09
77.2366442	764.939508	171.095369	1020.92655	218.027098	411.287941	369.660639	169.995023	69.9773788	69.4815323	84.9595173	69.6811351	69.4973679	86.7696043	83.1892	83.1892	0.09356596	0.08300498	0.90021467	0.39220689	-0.11381015	0.30434826	3.36959323	3.38955616	11.6159263	7.21929265	11:19:09
77.3214754	762.983473	170.775716	1019.24959	220.943507	416.231322	373.291775	171.75203	69.9496124	69.4883478	84.9447794	69.7042006	69.5046001	86.7276179	83.1892	83.1892	0.09356596	0.08300498	0.90021467	0.39220689	-0.11381015	0.30434826	3.36959323	3.38955616	11.6159263	7.21929265	11:19:09
78.127373	763.103566	170.572248	1017.73126	224.086283	421.02719	376.945038	173.61808	69.9703685	69.4845217	84.9252717	69.6945414	69.5032744	86.7766982	83.1892	83.1892	0.09356596	0.08300498	0.90021467	0.39220689	-0.11381015	0.30434826	3.36959323	3.38955616	11.6159263	7.21929265	11:19:09
77.8336523	760.037232	170.271067	1015.92443	227.456904	426.568304	380.598539	175.564108	69.9521132	69.4770972	84.8178433	69.6958679	69.4954331	86.8724045	83.1892	83.1892	0.09356596	0.08300498	0.90021467	0.39220689	-0.11381015	0.30434826	3.36959323	3.38955616	11.6159263	7.21929265	11:19:09
76.9312085	755.747276	169.422828	1014.21737	230.812545	430.698882	384.297163	177.361708	69.9400533	69.4891548	84.7297407	69.6798395	69.5058237	86.6693473	83.1892	83.1892	0.09356596	0.08300498	0.90021467	0.39220689	-0.11381015	0.30434826	3.36959323	3.38955616	11.6159263	7.21929265	11:19:09
76.5759977	752.196636	168.946991	1012.03468	234.429819	435.263883	388.035185	179.197727	69.9360625	69.4656269	84.7030863	69.6798153	69.4927142	86.5679489	83.1892	83.1892	0.09356596	0.08300498	0.90021467	0.39220689	-0.11381015	0.30434826	3.36959323	3.38955616	11.6159263	7.21929265	11:19:09
77.5567024	745.979299	168.475057	1009.3398	237.832134	439.782154	391.69707	180.854892	69.9165726	69.4765539	84.6796072	69.6778239	69.5028076	86.4230334	83.1892	83.1892	0.09356596	0.08300498	0.90021467	0.39220689	-0.11381015	0.30434826	3.36959323	3.38955616	11.6159263	7.21929265	11:19:09
78.7296531	743.25081	168.34974	1006.13657	241.154573	444.2268	395.295693	182.839083

Time	Flue	Room	Tunnel	DGM 1	DGM 1	Filter 1	DGM 2	DGM 2	Filter 2	DGM 3	Filter 3	Meter #1	Meter #2	Draft	Tunnel	CO	CO2	O2	scale	2.3502728	Meter	Meter		
																%	%	%	Lbs	Corrected	#1	#2	Draft	Calculated
10.0	Temp 1	Temp 2	Dry Bulb 3	In 13	Out 14	15	In 16	Out 17	18	In 19	20	21	22	23	24	25	25	27	28	Scale	Cu Ft	Cu Ft		Tunnel
0.0	70.90874	69.43234	69.18562	69.44234	69.43943	82.16785	69.35775	69.44818	83.38564			992.604	851.801	0.001508	0.092833				8.90	6.55	35.04	30.07	-0.249623	-0.22679
10.0	406.5062	70.91792	96.26955	69.88115	69.46321	82.9681	69.66698	69.52905	84.71144			993.795	853.024	0.059896	0.091798				7.41	5.06	35.08	30.11	-0.235026	-0.22705
20.0	532.7129	73.33655	114.5043	69.8342	69.39749	85.24575	69.60544	69.45459	86.02567			994.990	854.232	0.074129	0.088136				5.57	3.22	35.12	30.15	-0.231468	-0.22797
30.0	564.6543	76.32054	121.2002	69.97559	69.47724	88.40947	69.77268	69.57517	85.81093			996.196	855.437	0.074417	0.08879				2.35	0.00	35.17	30.20	-0.231396	-0.2278
40.0	585.8482	80.48645	195.4175	69.93823	69.50363	83.9496	69.70698	69.55906	83.41422			997.379	856.642	0.084086	0.077363				20.91	18.56	35.21	30.24	-0.228979	-0.23066
50.0	728.6773	74.84584	158.3478	69.90625	69.46373	82.84444	69.67084	69.48832	83.651			998.561	857.840	0.08866	0.085152				17.56	15.21	35.25	30.28	-0.227835	-0.22871
60.0	787.6418	75.7906	173.3211	69.91193	69.48691	84.21676	69.67651	69.48024	85.90606			999.749	859.025	0.09039	0.084346				13.94	11.59	35.29	30.32	-0.227402	-0.22891
70.0	763.1036	78.12737	170.5722	69.97037	69.48452	84.92527	69.69454	69.50327	86.7767			1000.919	860.205	0.088556	0.082607				10.65	8.30	35.33	30.37	-0.227861	-0.22935
80.0	731.9797	79.30054	165.896	69.91879	69.50044	84.22399	69.67421	69.49836	85.88973			1002.091	861.385	0.087838	0.081944				7.76	5.41	35.37	30.41	-0.228041	-0.22951
90.0	673.1925	78.51555	153.7619	70.0077	69.54562	83.01104	69.7698	69.54812	84.23904			1003.225	862.533	0.082371	0.088087				5.72	3.37	35.41	30.45	-0.229407	-0.22798
100.0	566.4755	77.3395	137.0883	69.97687	69.52644	83.13726	69.76188	69.54853	83.14554			1004.385	863.690	0.072988	0.086633				4.75	2.40	35.45	30.49	-0.231753	-0.22834
107.0	509.4952	85.14884	125.469	70.10983	69.61652	87.47166	69.89402	69.63694	85.51964			1005.212	864.533	0.068418	0.091842				4.40	2.05	35.48	30.52	-0.232895	-0.22704

Intertek Testing Services

Manufacturer:	**SBI**
Model:	**2.5R Series**
Date:	**11-3-21**
Run:	**2 - HIGH**
Project #:	**G104845527**
Test Duration (min):	**107**
Test Duration (high only):	**68**

RESULTS

Average emission rate:(gr/hr) 3.046

Burn Rate (Dry kg/hr): 5.520

PRESSURE FACTOR:	1.00936

TEMPERATURE FACTORS

DGM #1:	0.99679
DGM #2:	0.99697

VOLUMES SAMPLED

DGM #1:	12.81202
DGM #2:	12.90189
TOTAL TUNNEL VOLUME (scf):	32484

SAMPLE RATIOS

Sample Train 1:	2535.459
Sample Train 2:	2517.798

TOTAL EMISSIONS

Sample Train 1 (g):	**5.324**
Sample Train 2 (g):	**5.539**

EMISSION RATES

Sample Train 1 (g/hr):	**2.99**
Sample Train 2 (g/hr):	**3.11**
MAX Allowed	7.50%
DEVIATION:	1.98%

BAROMETRIC PRESSURE

Average:	30.2
Start:	30.2
End:	30.2

DRY GAS METER VALUES

Avg sample flow dscfm	DGM #1	Final:	1005.212
0.119738506		Initial:	992.604
0.120578388	DGM #2	Final:	864.533
		Initial:	851.801

TEMPERATURES (DEG. RANKIN)

DGM #1:	529.699
DGM #2:	529.605

CALIBRATION FACTORS

DGM #1:	1.0100
DGM #2:	1.0070

TUNNEL FLOW RATE: 303.592

PARTICULATE CATCH (mg)

Total Sample Train 1:	2.1
Total Sample Train 2:	2.2
Filter and seal Sample Train 1:	1.8
Filter and seal Sample Train 2:	1.8
Probe Sample Train 1:	0.3
Probe Sample Train 2:	0.4

	Room Temp		Bar Pressure		Relative Humidity		Air Velocity	
	Before	After	Before	After	Before	After	Before	After
	69	85	30.20	30.20	31.3	29.1	0	0

Average Dilution Tunnel Measurements						Sample Data	
Burn	Velocity	Flow Rate	Temp	Total Sample		Particulate Catch	
Time	(Ft/sec)	(dscf/min)	(R)	1	2	1	2
107	16.66	303.59	600.09	12.81	12.90	2.10	2.20

	Dilution Tunnel Dual Train Precision				
	Sample Ratios		Total Emissions (g)		
	Train 1	Train 2	Train 1	Train 2	Deviation (%)
	2535.46	2517.80	5.32	5.54	1.98%

Burn				Initial		Run	Average
Rate		Surface		Draft		Time	Draft
5.520		0.000		0.002		107.000	0.073

Run	Date	Burn Rate	Emission
2 - HIGH	2021-11-03	5.520	3.046

E&E Boiler Tunnel Traverse Worksheet

Static Pressure: **0.172**

Barometer: 30.2

	TUNNEL VELOCITY	TUNNEL TEMP	SQUARE ROOT
A CENTER	0.097	68.900	0.3114
B CENTER	0.098	69.100	0.3130
A1	0.088	69.000	0.2966
A2	0.098	68.900	0.3130
A3	0.084	69.000	0.2898
A4	0.072	68.900	0.2683
B1	0.082	69.100	0.2864
B2	0.092	69.100	0.3033
B3	0.092	69.100	0.3033
B4	0.072	69.100	0.2683
AVERAGE		69.02	0.2954

PITOT CONSTANT= 0.9459

E&E FUEL LOAD DATA SHEET

			Test Load Weight: Lower	Ideal	Upper	
Firebox Volume:	1.94	cu. ft	22.12	23.28	24.44	
Load Volume:	1.9400	cu. ft	Loading Density:	9.835	lbs./ft3	
Number of Spacers:			Load Density:	9.835	lbs./ft3	

Piece Size: Thick	x Wide	x Length	Weight lbs	Meter Moisture Content Dry Uncorrected %			
2	4	15.75	3.43	19.90	18.00	18.40	82.69
2	4	15.75	3.54	22.30	21.90	24.80	82.69
2	4	16.75	3.68	16.60	26.30	16.10	87.94
2	4	15.75	5.23	31.60	17.20	17.90	82.69
2	4	16	3.21	21.50	16.60	17.90	84.00
							0.00
							0.00
							0.00
							0.00

Test Load Weigh 19.080 lbs. **Dry Weigh** 7.184 kg.

Average Moisture Content: %

Dry: 20.47 20.467 Wet: 16.989

Pre-test moisture content: %

#DIV/0! #DIV/0! Wet: #DIV/0!

Coal Bed Range: 3.9 lbs. to 4.7 lbs. 20% to 25% of test load

For All Usable Firebox Volumes - High Fire Test Only

Nominal Required Load Density (wet basis)	10	lb/ft³				
Usable Firebox Volume	1.94	ft³				
Total Nom. Load Wt. Target	19.40	lb				
Total Load Wt. Allowable Range	18.40	to	20.40	lb		
Core Target Wt. Allowable Range	8.70	to	12.60	lb		
Remainder Load Wt. Allowable Range	6.80	to	10.70	lb		
						Mid-Point
Core Load Pc. Wt. Allowable Range	2.90	to	4.90	lb		3.90
Remainder Load Pc. Wt. Allowable Range	1.90	to	10.70	lb		6.30
	Pc. #					
Core Load Piece Wt. Actual	1	3.43	**3.5**	In Range		
	2	3.54	**3.5**	In Range		
	3	3.68	**3.5**	In Range		
Core Load Total. Wt. Actual		10.65		In Range		
	Pc. #					
Remainder Load Piece Wt.	1	5.23	**5.2**	In Range		
(1 to 3 Pcs.)	2	3.21	**3.2**	In Range		
	3			NA		
Remainder Load Piece Weight Ratio - Small/Large		61%		In Range		≤ 67%
Remainder Load Tot. Wt. Act		8.44	lb	In Range		
Total Load Wt. Actual		19.08	lb	In Range		
Core % of Total Wt.		56%		In Range		45-65%
Remainder % of Total Wt.		44%		In Range		35-55%
Actual Load % of Nominal Target		98%		In Range		95-105%
Actual Fuel Load Density		9.8	lb/ft³			
Kindling and Start-up Fuel						
Maximim Kindling Wt. (20% of Tot. Load Wt.)		3.82	lb			
Actual Kindling Wt.		3.70	lb	In Range		19.4%
Maximum Start-up Fuel Wt. (30% of Tot. Load Wt.)		5.72	lb			
Actual Start-up Fuel Wt.		5.09	lb	In Range		26.7%
Allowable Residual Start-up Fuel Wt. Range	1.9	to	3.8	lb		Mid-Point
Actual Residual Start-up Fuel Wt.		2.35	lb	In Range		2.9
Total Wt. All Fuel Added (wet basis)		27.86	lb			
High Fire Test Run End Point Range	Low		High			Mid-Point
Based on Fuel Load Wt. (w/tares)	1.7	to	2.1	lb		1.9
Actual Fuel Load Ending Wt.		2.0	lb	In Range		

Fuel Piece Moisture Reading (%-dry basis)

1	2	3	Ave.		Pc. Wt. Dry Basis			
19.9	18	18.4	18.8	In Range	2.89	lb	1.31	kg
22.3	21.9	24.8	23.0	In Range	2.88	lb	1.31	kg
16.6	26.3	16.1	19.7	In Range	3.07	lb	1.39	kg
31.6	17.2	17.9	22.2	In Range	4.28	lb	1.94	kg
21.5	16.6	17.9	18.7	In Range	2.70	lb	1.23	kg
					0.00	lb	0.00	kg

Total Load Ave. MC (%-dry basis)	20.6	In Range			
Total Load Ave. MC % (wet basis)	17.1				
Total Test Load Weight (dry basis) →			15.82	lb	7.17 kg
Kindling Moisture (%-dry basis)					
10 10 10	10.0	In Range	3.36	lb	1.52 kg
Start-up Fuel Moisture Readings (%-dry basis)					
20.6 18.6 18.9	19.4	In Range	4.26	lb	1.93 kg
Total Wt. All Fuel Added (dry basis) →			23.44	lb	10.63 kg
Total Wt. All Fuel Burned (dry basis) →			19.0	lb	8.6 kg

Time	Flue	Room	Tunnel	DGM 3	DGM 3	Filter 3			
10.0	Temp 1	Temp 2	Dry Bulb 3	In 13	Out 14	15			
0.0	70.90874	69.43234	69.18562	70.53599	70.53599	84.16177			
10.0	406.5062	70.91792	96.26955	70.69387	70.69387	86.63784			
20.0	532.7129	73.33655	114.5043	70.68609	70.68609	86.68259			
30.0	564.6543	76.32054	121.2002	70.84366	70.84366	86.84755			
40.0	585.8482	80.48645	195.4175	70.82131	70.82131	85.39403			
50.0	728.6773	74.84584	158.3478	70.83766	70.83766	85.33874			
60.0	787.6418	75.7906	173.3211	70.92995	70.92995	87.41301			

Meter #1	Meter #2	Draft	Tunnel	CO	CO2	O2	scale	2.3502728	Meter	Meter		
21	22	23	24	% 25	% 25	% 27	Lbs 28	Corrected Scale	#1 Cu Ft	#2 Cu Ft	Draft	Calculated Tunnel
238.510		0.001508	0.092833				8.90	6.55	8.42	0.00	-0.249623	-0.22679
239.730		0.059896	0.091798				7.41	5.06	8.46		-0.235026	-0.22705
240.964		0.074129	0.088136				5.57	3.22	8.51		-0.231468	-0.22797
242.199		0.074417	0.08879				2.35	0.00	8.55		-0.231396	-0.2278
243.446		0.084086	0.077363				20.91	18.56	8.59		-0.228979	-0.23066
244.668		0.08866	0.085152				17.56	15.21	8.64		-0.227835	-0.22871
245.868		0.09039	0.084346				13.94	11.59	8.68		-0.227402	-0.22891

Intertek Testing Services

Manufacturer:	**SBI**
Model:	**2.5R Series**
Date:	**11-3-21**
Run:	**2 - HIGH - 1st hour**
Project #:	**G104845527**
Test Duration (min):	**60**
Test Duration (high only):	**NA**

PRESSURE FACTOR:	1.00936

TEMPERATURE FACTORS

DGM #3:	0.99479
DGM #2:	1.14783

VOLUMES SAMPLED

DGM #3:	7.26258
DGM #2:	0.00000
SAMPLE FLOW (dscfm)	0.12104
TOTAL TUNNEL VOLUME (scf):	18351

SAMPLE RATIOS

Sample Train 3:	2526.785
Sample Train 2:	#DIV/0!

TOTAL EMISSIONS

Sample Train 3 (g):	**4.043**
Sample Train 2 (g):	**#DIV/0!**

EMISSION RATES

Sample Train 3 (g/hr):	**4.04**
Sample Train 2 (g/hr):	**#DIV/0!**
MAX Allowed	7.50%
DEVIATION:	#DIV/0!

RESULTS

Average emission rate:(gr/hr)	**#DIV/0!**
Burn Rate (Dry kg/hr):	#VALEUR!

BAROMETRIC PRESSURE

Average:	30.2
Start:	30.2
End:	30.2

DRY GAS METER VALUES

DGM #3	Final:	245.868
	Initial:	238.510
DGM #2	Final:	0.000
	Initial:	0.000

TEMPERATURES (DEG. RANKIN)

DGM #3:	530.764
DGM #2:	460.000

CALIBRATION FACTORS

DGM #3:	0.9830
DGM #2:	0.0000

TUNNEL FLOW RATE:	305.850

PARTICULATE CATCH (mg)

Total Sample Train 3:	1.6
Total Sample Train 2:	
Filter and seal Sample Train 3:	1.5
Filter and seal Sample Train 2:	
Probe Sample Train 3:	0.1
Probe Sample Train 2:	

Ambiant	Flue	Dilution Tunne	Firebox Top	Firebox Back	Firebox Right	Firebox Left	Firebox Botton	DGM Inlet 1	DGM Outlet 1	Probe Temp 1	DGM inlet 2	DGM outlet 2	Probe Temp 2	Probe Temp 3	DGM inlet 3	Manomètre Dr	Manomètre Tu	Trans Vacuum	Trans Pressio	Trans Pressio	Trans Vacuum	Massflow 1	Massflow 2	Balance	Weigth for BR	Date	weight loss for weight loss %	
89.0060683	447.10194	132.468166	618.464148	328.606203	509.435271	497.538686	307.218092	69.7363469	69.7384303	81.6284683	69.7250966	69.8146806	80.6362446	76.3565881	71.8482376	0.0648858	0.08759857	0.41969287	0.16033398	-0.09145397	-0.13086968	0.027823	0.21427215	3.8625116	22.9638417	12:16:17		
82.2930464	632.781193	146.373154	866.576207	329.979414	482.384848	479.7634	310.169974	70.4261796	69.9471051	82.0367395	70.3099621	70.1387482	82.728979	86.1380622	71.9497309	0.08101281	0.08807001	0.82183157	0.1623323	-0.10438626	0.24004364	3.47061923	3.47275993	24.116997	19.8083271	12:26:17		
85.9536742	510.650399	118.841939	862.161224	322.234448	464.605204	456.999781	292.446363	70.5314696	69.9965925	84.8425533	70.3581912	70.1344907	85.0984829	86.2941555	71.833508	0.07391455	0.08902273	0.82955432	0.16663549	-0.10194514	0.26076303	3.44154602	3.47240424	22.3146612	18.0059913	12:36:17		
82.118996	498.948107	124.216698	820.446518	305.882595	448.311098	438.489065	270.008304	70.5718157	70.0906918	82.3487944	70.3868773	70.1860923	82.0726189	84.7730313	71.7364629	0.07168037	0.08904449	0.8279488	0.18075996	-0.08701453	0.27332695	3.50423118	3.48895779	20.7282395	16.4195696	12:46:17	6.54427206	28.0%
82.0233001	484.686452	127.120704	795.873636	274.253872	443.258414	430.689316	237.872097	70.6438283	70.1239777	86.6018438	70.4509822	70.2327072	86.6795053	86.4250282	71.8954309	0.06780899	0.08995349	0.83260802	0.17910227	-0.08439174	0.27613723	3.53777102	3.52715111	19.1854924	14.8768225	12:56:17	4.93150457	21.1%
81.1923502	483.95014	126.424283	800.80778	258.310056	437.80294	423.863885	208.76356	70.8211558	70.2484454	84.6980535	70.5887586	70.3396732	85.0135399	86.2088528	71.9923212	0.06825857	0.09299701	0.83229822	0.21844414	-0.05306585	0.24363333	3.56374628	3.56479368	17.7608895	13.4522196	13:06:17	4.55377166	19.5%
79.3017981	499.121116	122.14227	818.305524	244.360079	432.407492	418.65942	198.413187	71.0121956	70.3883036	82.5365147	70.7235961	70.426209	82.7484635	85.0179826	71.9901342	0.06967461	0.09176048	0.83726232	0.23195549	-0.02343171	0.23960599	3.54680425	3.56576732	16.1561875	11.8475176	13:16:17	4.57205204	19.5%
76.4221466	498.8058	120.952561	838.818897	238.033658	435.78427	419.584937	188.367259	70.996768	70.4366024	87.0729184	70.726075	70.4607614	87.18236	4187.44783	4187.44783	0.06831372	0.09235268	0.86418746	0.24332091	-0.03677275	0.26747772	3.53594831	3.5534755	14.4366727	10.1280028	13:26:17	4.74881968	20.3%
76.2951502	544.805319	125.054619	899.510566	236.210186	444.624521	425.70445	180.473855	71.0684811	70.4887583	84.3816514	70.8086254	70.5483206	83.5547161	4187.70984	4187.70984	0.07598188	0.09153186	0.86112638	0.26107869	-0.02625888	0.25126265	3.60267065	3.59496675	12.5585642	8.24989428	13:36:17	5.20232537	22.2%
76.6629918	503.472866	121.071623	911.947305	240.172628	456.09177	435.331143	175.444545	71.1071039	70.5577976	82.2963548	70.8672428	70.5786231	81.7750103	4187.87502	4187.87502	0.07209868	0.09066232	0.89711671	0.28153873	-0.01875383	0.23982727	3.59737462	3.55930096	11.0701828	6.76151294	13:46:17	5.08600466	21.7%
76.7851192	460.090636	115.977756	853.043041	242.527913	463.862732	444.949546	173.569449	71.2116665	70.6557241	86.0707532	70.9697355	70.6786311	84.9377874	4188.11265	4188.11265	0.06733532	0.09137631	0.89535137	0.28268549	-0.01735728	0.23351581	3.58077354	3.56505758	10.1072075	5.79853763	13:56:17	4.32946522	18.5%
79.8355893	418.380981	111.439124	766.549944	241.32057	466.401876	450.701858	171.0236	71.7409691	71.1039731	86.4287161	71.7746869	72.084365	84.5992813	4188.21186	4188.21186	0.062551	0.09151593	0.89460639	0.26881081	-0.08754817	0.24725744	3.64405698	3.65089215	9.65164063	5.34297073	14:06:18	2.90692354	12.4%
79.4791995	367.09219	105.691343	671.094691	233.837528	461.789797	448.520554	172.082658	72.3513069	72.0520746	85.8417269	73.0478186	74.2156201	83.5483654	4188.30543	4188.30543	0.05598135	0.092242	0.91600438	0.31186546	-0.12072478	0.27002493	3.62860984	3.64191792	9.40918904	5.10051914	14:16:18	1.66099379	7.1%
78.917229	334.680958	101.466677	595.574361	227.377817	451.674251	438.759665	177.258172	72.8518278	72.7407407	85.2559946	73.806009	74.818757	83.0144898	4188.46345	4188.46345	0.05128177	0.09459495	0.91374976	0.31858707	-0.11002924	0.2605565	3.66670317	3.65397207	9.21900104	4.91033114	14:26:18	0.88820649	3.8%
84.6744176	312.480724	96.0510691	548.05477	230.855838	444.721768	434.558167	182.836102	72.9235452	72.864468	82.7961058	73.8049203	74.4265162	82.4831497	4188.61132	4188.61132	0.05076481	0.09260014	0.9292764	0.36013163	-0.12807086	0.22949339	3.65610621	3.6600811	8.82354916	4.51487926	14:36:18	0.82809148	3.5%
87.4465336	303.129125	95.5234261	518.477197	233.887654	439.093438	430.66856	190.962661	72.6550148	72.7011998	81.72397	73.3838651	73.9057959	82.3078487	4188.74072	4188.74072	0.04968865	0.09727501	0.90908808	0.34338437	-0.09254397	0.2695922	3.66888813	3.6847008	8.4799101	4.17124021	14:46:18	0.92927894	4.0%
87.2073912	294.843703	97.7745211	497.489596	234.6029	431.738447	424.689873	193.461113	72.522647	72.5238953	81.3337418	73.0992297	73.4694976	82.1218898	4188.76251	4188.76251	0.04798842	0.09206861	0.91554215	0.34599581	-0.09722184	0.27412848	3.66074167	3.65563087	8.21782176	3.90915186	14:56:18	1.00117928	4.3%
87.2305024	287.254816	97.1464358	480.504728	234.045897	424.679426	419.023021	190.948879	72.4065331	72.3428632	86.852189	72.8692241	73.1658398	83.0624223	4188.80627	4188.80627	0.04834296	0.09269535	0.90894548	0.30369053	-0.08784338	0.2564382	3.60010869	3.66311348	8.01163177	3.70296187	15:06:18	0.81191738	3.5%
86.4637542	282.565499	99.5773744	464.989083	230.294252	417.461458	412.482319	192.67942	72.2944574	72.2012356	89.7230431	72.6951794	72.9323295	82.3519556	4188.8725	4188.8725	0.04627439	0.09421036	0.91846308	0.28203831	0.00925667	0.24343909	3.64137701	3.61226282	7.84578072	3.53711082	15:16:18	0.63412938	2.7%
84.8802224	277.214267	98.8372441	452.486153	226.13785	409.276069	405.442211	190.103211	72.1994048	72.0757959	89.8263941	72.5398106	72.7578401	78.9272239	4188.86812	4188.86812	0.04352794	0.09197518	0.91187132	0.27270526	-0.03169748	0.2217731	3.64502571	3.60634393	7.72165367	3.41298377	15:26:18	0.49616809	2.1%
84.7982621	272.312984	97.974537	442.840119	223.547697	402.576422	399.677543	188.75801	72.1069201	71.9541698	83.128254	72.3832567	72.596726	81.5922262	4188.82903	4188.82903	0.04492248	0.09449211	0.91557411	0.27604336	-0.10535136	0.29177943	3.65891732	3.61151538	7.54796349	3.23929359	15:36:18	0.46366828	2.0%
83.7607623	265.235952	97.198055	432.397146	221.290268	396.30888	394.449727	186.843512	72.0284984	71.8865645	81.1542028	72.237427	72.435931	85.4508831	4188.8149	4188.8149	0.04383404	0.09264035	0.88723769	0.27311401	-0.08744599	0.23238727	3.58938551	3.59585922	7.40143366	3.09276376	15:46:18	0.44434707	1.9%
84.2208734	260.613791	96.2756409	421.981465	219.080495	388.943086	388.786325	185.585426	71.9591006	71.7838611	86.6910576	72.1892618	72.3465721	86.2366129	4188.7689	4188.7689	0.04220672	0.09250951	0.90976177	0.26478012	-0.12288205	0.24250971	3.57277459	3.5812243	7.23819701	2.92952711	15:56:18	0.48345666	2.1%
83.8331498	257.017416	95.5593891	412.8343	216.551218	381.836808	383.459964	183.436358	71.903202	71.7237949	81.8297703	72.1125597	72.282777	80.6449668	4188.79623	4188.79623	0.04258719	0.09586599	0.9060516	0.25256313	-0.01609698	0.26215465	3.68658907	3.66912744	7.10214121	2.79347131	16:06:18	0.44582228	1.9%
83.5904344	252.742346	94.8587686	405.16547	213.93393	375.546131	378.780655	181.422696	71.7876293	71.6281943	82.1355246	71.978685	72.1514107	85.749845	4188.68381	4188.68381	0.04291586	0.09545258	0.88272353	0.26493907	-0.02772355	0.28925927	3.67719031	3.7157803	6.94775995	2.63909005	16:16:18	0.4536737	1.9%
83.7449886	249.447369	90.4157212	399.004798	212.649447	370.470856	373.53846	180.219918	71.7978502	71.6013656	83.4259814	71.9864077	72.1258374	84.1880344	4188.59669	4188.59669	0.04296786	0.09377694	0.8931656	0.24531923	-0.0068207	0.2502005	3.70795838	3.69784824	6.76042813	2.45175823	16:26:18	0.47776888	2.0%
84.4278706	247.415827	89.8854114	393.346882	213.211401	367.688752	368.644354	180.069955	71.7332762	71.5288754	83.9968771	71.9555545	72.0745925	82.5724982	4188.48713	4188.48713	0.04220042	0.09363447	0.88176464	0.22584699	-0.02672439	0.28820203	3.75879593	3.75100024	6.55675421	2.24808431	16:36:18	0.545387	2.3%
84.8483361	245.024015	89.879545	388.222247	212.085355	364.266022	364.50555	179.674542	71.6332742	71.4713292	84.1473531	71.8859493	72.002494	82.5628834	4188.41803	4188.41803	0.04219468	0.09291508	0.88981932	0.24278727	-0.04645778	0.26329795	3.75314914	3.73488761	6.39572629	2.08705639	16:46:18	0.55203367	2.4%
84.7358722	243.01631	89.4398935	383.131892	210.642824	360.855662	360.126633	178.50196	71.5633424	71.3697497	83.1870696	71.7768976	71.8996921	87.3680905	4188.3621	4188.3621	0.04222122	0.09200931	0.86394159	0.1991195	-0.05239596	0.27424896	3.78536947	3.77504952	6.25121258	1.94254268	16:56:18	0.50921555	2.2%
85.4045591	240.550469	89.1376805	377.968962	208.913777	357.434381	356.439934	177.02546	71.5555965	71.3074606	83.6622666	71.7704013	71.8981912	84.2670598	4188.20838	4188.20838	0.03992352	0.09444558	0.87317643	0.1954862	-0.05916299	0.29229084	3.76964532	3.77710171	6.11338652	1.80471662	17:06:18	0.44336769	1.9%
85.4526057	238.076713	88.7705721	373.027678	207.13966	353.733705	352.599771	175.784316	71.4886673	71.2575945	83.5539606	71.7276233	71.8233643	82.4265324	4188.20938	4188.20938	0.03838498	0.09464148	0.8994328	0.20881588	-0.03675004	0.29689843	3.77742134	3.78300421	5.98512477	1.67645487	17:16:18	0.41060152	1.8%
85.2537381	234.15636	88.3772598	367.733359	205.21603	350.053662	349.483447	174.017461	71.4628197	71.2059286	83.6979101	71.6880414	71.7916933	82.1221762	4188.14688	4188.14688	0.0389373	0.0943081	0.89429168	0.20208292	-0.02669033	0.26954056	3.82927843	3.78469907	5.86091166	1.55224176	17:26:18	0.39030092	1.7%
85.8529137	230.658069	88.1146024	362.448057	202.94204	345.456763	345.096717	173.812281	71.3752352	71.1483136	83.0861615	71.6204489	71.6987112	83.6915515	4188.08578	4188.08578	0.03861651	0.09371938	0.88559037	0.19168258	-0.04075803	0.27105266	3.82140898	3.78502198	5.7461891	1.4375192	17:36:18	0.36719742	1.6%
85.0852044	228.197503	87.6190888	357.517212	200.770315	340.667535	339.681307	172.977156	71.4055054	71.1423611	82.9713949	71.6194933	71.7414648	84.7159742	4188.04825	4188.04825	0.0381794	0.09353693	0.88517485	0.21224481	-0.03785139	0.27383836	3.79909061	3.78698893	5.63096251	1.32229262	17:46:19	0.35416225	1.5%
86.1140502	224.706681	87.0385838	351.10717	198.729939	336.196038	334.25225	170.752304	71.4397391	71.1470356	82.9131289	71.60918	71.7328172	85.1791445	4187.97141	4187.97141	0.03760159	0.09652824	0.88941363	0.20478519	-0.03235602	0.26815386	3.83988523	3.76362316	5.53332377	1.22465387	17:56:19	0.32758789	1.4%
86.3985093	221.291533	86.5670653	344.717988	196.164983	331.344306	330.281284	169.456416	71.4386852	71.1622208	85.8373745	71.6422624	71.7846295	84.1240202	4188.00746	4188.00746	0.03654017	0.09465262	0.8800829	0.22561991	-0.03905492	0.29232034	3.8064044	3.77355628	5.42401853	1.11534863	18:06:19	0.32217057	1.4%
85.9378835	218.208164	86.0874726	339.78684	193.623789	326.376713	325.890717	167.784686	71.4362754	71.167722	85.8973849	71.6535904	71.7722297	85.7279429	4188.01331	4188.01331	0.03769835	0.09563681	0.90424446	0.25794496	-0.04696871	0.2849246	3.80495377	3.7756265	5.32233933	1.01366943	18:16:19	0.30862318	1.3%
85.9912253	216.106166	85.6238245	334.775531	191.481609	322.151633	321.227125	165.82333	71.415909	71.1544317	80.7280247	71.6119951	71.7381297	85.7742649	4187.96068	4187.96068	0.03632118	0.09352144	0.86878767	0.24078896	-0.05566593	0.27421945	3.83055039	3.77835073	5.21707864	0.90840874	18:26:19	0.31624513	1.4%
85.8598628	213.073034	85.3642959	328.740342	189.324065	318.605309	315.990486	164.170861	71.386816	71.1136758	83.5325943	71.5658363	71.7002995	86.6122655	4187.92997	4187.92997	0.03416307	0.09352198	0.8668576	0.2537326	-0.02225089	0.30209118	3.75071339	3.77458237	5.12593084	0.81726094	18:36:19	0.29808769	1.3%
85.9143854	210.434503	84.899583	322.790785	187.191353	316.070626	310.441371	162.367195	71.3917846	71.1348846	85.5006761	71.5970317	71.7027697	86.6254574	4187.94532	4187.94532	0.03428098	0.09288739	0.87138896	0.24377508	-0.07647795	0.28382065	3.76132183	3.79136704	5.04065521	0.73198531	18:46:19	0.28168412	1.2%
85.5038529	208.465074	84.5872561	317.675352	184.969664	313.353803	304.822126	160.58545	71.3970663	71.125593	86.3625801	71.5665106	71.7409363	86.3530775	4187.85346	4187.85346	0.03404788	0.09254921	0.86637323	0.26333815	-0.05777779	0.32948347	3.78162243	3.7822453	4.93924237	0.63057248	18:56:19	0.27783626	1.2%
85.5891088	206.326415	84.3284723	313.944471	183.045511	310.253663	299.360265	158.787644	71.391348	71.1182084	86.3531872	71.5362304	71.7352189	86.2990631	4187.80584	4187.80584	0.03470458	0.09514168	0.86287206	0.2531649	-0.0792597	0.31246195	3.77731222	3.75207387	4.85038935	0.54171945	19:06:19	0.25744159	1.2%
85.271779	204.416668	84.064294	310.789764	181.244314	307.192166	294.392503	157.169734	71.3227789	71.0900219	86.6635695	71.5142944	71.6662451	86.6272174	4187.74043	4187.74043	0.03467387	0.09488347	0.87002439	0.27766699	-0.07544473	0.31812677	3.78645621	3.78422044	4.76912549	0.46045559	19:16:19	0.27152972	1.2%
84.7221751	203.04992	83.9921889	307.671395	179.615665	303.952048	289.609567	155.812886	71.3076612	71.0557476	86.8906266	71.5120841	71.6386412	86.9604288	4187.57399	4187.57399	0.03375489	0.09322014	0.87198643	0.21252866	-0.12381309	0.28545568	3.77326451	3.79229479	4.67390036	0.36523046	19:26:19	0.26534201	1.1%
84.4413913	202.757889	83.5697962	304.850159	178.020023	300.918355	284.942662	154.786473	71.2094084	71.0432658	83.5602797	71.4454825	71.5861981	87.4287502	4187.4054	4187.4054	0.0341981	0.09576605	0.89649467	0.22301983	-0.13153386	0.27242953	3.80021014	3.79035734	4.59854146	0.28987156	19:36:19	0.25184789	1.1%
84.4602967	201.059695	83.327198	301.393596	176.293121	297.76106	280.192626	153.260821	71.1655684	70.9473688	81.8729155	71.3883246	71.5244647	82.8276592	4187.2398	4187.2398	0.03454771	0.09422463	0.87189054	0.19416913	-0.12501662	0.27775259	3.78029965	3.78340088	4.5184045	0.2097346	19:46:19	0.25072099	1.1%
84.075209	196.459449	82.8686197	296.71722	174.86098	293.965478	275.48926	152.27158	71.1139179	70.9119541	81.2168046	71.3291854	71.4873947	81.0958336	4187.02497	4187.02497	0.03264209	0.09369428	0.88326936	0.20150386	-0.16291652	0.27888605	3.8160982	3.77785407	4.43906662	0.13039672	19:56:19	0.23483375	1.0%
84.1889066	192.682223	82.3676655	290.319622	173.257729	289.383187	270.621506	151.116068	71.0776374	70.8390223	83.7653059	71.330381	71.4773494	82.158987	4186.87572	4186.87572	0.03187517	0.09744158	0.88236456	0.19770024	-0.18465957	0.30661764	3.80242296	3.77271541	4.36846118	0.05979129	20:06:19	0.23008028	1.0%
83.9804554	189.0338	82.0372753	283.860307	171.576128	284.278473	265.607314	149.868106	71.0489333	70.8465466	85.3219335	71.2850259	71.4557285	82.4914822	4186.74366	4186.74366	0.03126517	0.09532347	0.89845916	0.18715231	-0.19102921	0.27998017	3.80119853	3.79832186	4.3086699	0	20:16:19	0.2097346	0.9%

Time	Flue	Room	Tunnel	DGM 1	DGM 1	Filter 1	DGM 2	DGM 2	Filter 2	DGM 3	Filter 3	Meter #1	Meter #2	Draft	Tunnel	CO	CO2	O2	scale	1.0767308	Meter #1	Meter #2	Draft	Calculated
10.0	Temp 1	Temp 2	Dry Bulb 3	In 13	Out 14	15	In 16	Out 17	18	In 19	20	21	22	23	24	% 25	% 25	% 27	Lbs 28	Corrected Scale	Cu Ft	Cu Ft		Tunnel
0.0	447.1019	89.00607	132.4682	69.73635	69.73843	81.62847	69.7251	69.81468	80.63624			5.266	864.581	0.064886	0.087599				23.41	22.33	0.19	30.52	-0.233779	-0.2281
10.0	632.7812	82.29305	146.3732	70.42618	69.94711	82.03674	70.30996	70.13875	82.72898			6.459	865.807	0.081013	0.08807				20.25	19.18	0.23	30.56	-0.229747	-0.22798
20.0	510.6504	85.95367	118.8419	70.53147	69.99659	84.84255	70.35819	70.13449	85.09848			7.650	867.018	0.073915	0.089023				18.45	17.38	0.27	30.61	-0.231521	-0.22774
30.0	498.9481	82.119	124.2167	70.57182	70.09069	82.34879	70.38688	70.18609	82.07262			8.845	868.227	0.07168	0.089044				16.87	15.79	0.31	30.65	-0.23208	-0.22774
40.0	484.6865	82.0233	127.1207	70.64383	70.12398	86.60184	70.45098	70.23271	86.67951			10.052	869.454	0.067809	0.089953				15.32	14.25	0.35	30.69	-0.233048	-0.22751
50.0	483.9501	81.19235	126.4243	70.82116	70.24845	84.69805	70.58876	70.33967	85.01354			11.265	870.690	0.068259	0.092997				13.90	12.82	0.40	30.74	-0.232935	-0.22675
60.0	499.1211	79.3018	122.1423	71.0122	70.3883	82.53651	70.7236	70.42621	82.74846			12.482	871.934	0.069675	0.09176				12.29	11.22	0.44	30.78	-0.232581	-0.22706
70.0	498.8058	76.42215	120.9526	70.99677	70.4366	87.07292	70.72607	70.46076	87.18236			13.700	873.172	0.068314	0.092353				10.57	9.50	0.48	30.82	-0.232922	-0.22691
80.0	544.8053	76.29515	125.0546	71.06848	70.48876	84.38165	70.80863	70.54832	83.55472			14.940	874.420	0.075982	0.091532				8.70	7.62	0.53	30.87	-0.231005	-0.22712
90.0	503.4729	76.66299	121.0716	71.1071	70.5578	82.29635	70.86724	70.57862	81.77501			16.174	875.664	0.072099	0.090662				7.21	6.13	0.57	30.91	-0.231975	-0.22733
100.0	460.0906	76.78512	115.9778	71.21167	70.65572	86.07075	70.96974	70.67863	84.93779			17.405	876.907	0.067335	0.091376				6.24	5.17	0.61	30.95	-0.233166	-0.22716
110.0	418.381	79.83559	111.4391	71.74097	71.10397	86.42872	71.77469	72.08437	84.59928			18.649	878.179	0.062551	0.091516				5.79	4.71	0.66	31.00	-0.234362	-0.22712
120.0	367.0922	79.4792	105.6913	72.35131	72.05207	85.84173	73.04782	74.21562	83.54837			19.894	879.453	0.055981	0.092242				5.55	4.47	0.70	31.04	-0.236005	-0.22694
130.0	334.681	78.91723	101.4667	72.85183	72.74074	85.25599	73.80601	74.81876	83.01449			21.157	880.740	0.051282	0.094595				5.36	4.28	0.75	31.09	-0.23718	-0.22635
140.0	312.4807	84.67442	96.05107	72.92355	72.86447	82.79611	73.80492	74.42652	82.48315			22.424	882.027	0.050765	0.0926				4.96	3.88	0.79	31.14	-0.237309	-0.22685
150.0	303.1291	87.44653	95.52343	72.65501	72.7012	81.72397	73.38387	73.9058	82.30785			23.676	883.310	0.049699	0.097275				4.62	3.54	0.84	31.18	-0.237575	-0.22568
160.0	294.8437	87.20739	97.77452	72.52265	72.5239	81.33374	73.0993	73.4695	82.12189			24.930	884.587	0.047988	0.092069				4.36	3.28	0.88	31.23	-0.238003	-0.22698
170.0	287.2548	87.2305	97.14644	72.40653	72.34286	86.85219	72.86922	73.16584	83.06242			26.185	885.870	0.048343	0.092695				4.15	3.07	0.92	31.27	-0.237914	-0.22683
180.0	282.5655	86.46375	99.57737	72.29446	72.20124	89.72304	72.69518	72.93233	82.35196			27.434	887.142	0.046274	0.09421				3.98	2.91	0.97	31.32	-0.238431	-0.22645
190.0	277.2143	84.88022	98.83724	72.1994	72.0758	89.82639	72.53981	72.75784	80.63624			28.678	888.407	0.043528	0.091975				3.86	2.78	1.01	31.36	-0.239118	-0.22701
200.0	272.313	84.79826	97.97454	72.10692	71.95417	83.12825	72.38326	72.59673	81.59223			29.932	889.667	0.044922	0.094492				3.69	2.61	1.06	31.41	-0.238769	-0.22638
210.0	265.236	83.76076	97.19806	72.0285	71.88656	81.1542	72.23743	72.43593	85.45088			31.172	890.931	0.043834	0.09264				3.54	2.46	1.10	31.45	-0.239041	-0.22684
220.0	260.6138	84.22087	96.27564	71.9591	71.78386	86.69106	72.18926	72.34657	86.23661			32.402	892.185	0.042207	0.09251				3.38	2.30	1.14	31.49	-0.239448	-0.22687
230.0	257.0174	83.83315	95.55939	71.9032	71.72379	81.82977	72.11256	72.28278	80.64497			33.651	893.459	0.042587	0.095866				3.24	2.16	1.19	31.54	-0.239353	-0.22603
240.0	252.7423	83.59043	94.85877	71.78763	71.62819	82.13552	71.97869	72.15141	85.74985			34.932	894.755	0.042916	0.095453				3.09	2.01	1.23	31.58	-0.239271	-0.22614
250.0	249.4474	83.74499	90.41572	71.79785	71.60137	83.42598	71.98641	72.12584	84.18803			36.214	896.052	0.042968	0.093777				2.90	1.82	1.28	31.63	-0.239258	-0.22656
260.0	247.4158	84.42787	89.88541	71.73328	71.52888	83.99688	71.95555	72.07459	82.5725			37.494	897.352	0.0422	0.093634				2.69	1.62	1.32	31.68	-0.23945	-0.22659
270.0	245.024	84.84834	89.87954	71.63327	71.47133	84.14735	71.88595	72.00249	82.56288			38.771	898.661	0.042195	0.092915				2.53	1.46	1.37	31.72	-0.239451	-0.22677
280.0	243.0163	84.73587	89.43989	71.56334	71.36975	83.18707	71.7769	71.89969	87.36809			40.072	899.977	0.042221	0.092009				2.39	1.31	1.41	31.77	-0.239445	-0.227
290.0	240.5505	85.40456	89.13768	71.5556	71.30746	83.66227	71.7704	71.89819	84.26706			41.367	901.297	0.039924	0.094446				2.25	1.17	1.46	31.82	-0.240019	-0.22639
300.0	238.0767	85.45261	88.77057	71.48867	71.25759	83.55396	71.72762	71.82336	82.42653			42.662	902.616	0.038385	0.094641				2.12	1.05	1.51	31.86	-0.240404	-0.22634
310.0	234.1564	85.25374	88.37726	71.46282	71.20593	83.69791	71.68804	71.79169	82.12218			43.965	903.933	0.038937	0.094308				2.00	0.92	1.55	31.91	-0.240266	-0.22642
320.0	230.6581	85.85291	88.1146	71.37524	71.14831	83.08616	71.62045	71.69871	83.69155			45.260	905.250	0.038617	0.093719				1.88	0.81	1.60	31.96	-0.240346	-0.22657
330.0	228.1975	85.0852	87.61909	71.40551	71.14236	82.97139	71.61949	71.74146	84.71597			46.555	906.565	0.038179	0.093537				1.77	0.69	1.64	32.00	-0.240455	-0.22662
340.0	224.7067	86.11405	87.03858	71.43974	71.14704	82.91313	71.60918	71.73282	85.17914			47.870	907.885	0.037602	0.096528				1.67	0.59	1.69	32.05	-0.2406	-0.22587
350.0	221.2915	86.39851	86.56707	71.43869	71.16222	85.83737	71.64226	71.78463	84.12402			49.168	909.200	0.03654	0.094653				1.56	0.48	1.74	32.09	-0.240865	-0.22634
360.0	218.2082	85.93788	86.08747	71.43628	71.16772	85.89738	71.65359	71.77223	85.72794			50.465	910.518	0.037698	0.095637				1.46	0.38	1.78	32.14	-0.240575	-0.22609
370.0	216.1062	85.99123	85.62382	71.41591	71.15443	80.72802	71.612	71.73813	85.77426			51.772	911.838	0.036321	0.093521				1.35	0.28	1.83	32.19	-0.24092	-0.22662
380.0	213.073	85.85986	85.3643	71.38682	71.11368	83.53259	71.56584	71.7003	86.61227			53.072	913.155	0.034163	0.093522				1.26	0.19	1.87	32.23	-0.241459	-0.22662
390.0	210.4345	85.91439	84.89958	71.39178	71.13488	85.50068	71.59703	71.70277	86.62546			54.356	914.470	0.034281	0.092887				1.18	0.10	1.92	32.28	-0.24143	-0.22678
400.0	208.4651	85.50385	84.58726	71.39707	71.12559	86.36258	71.56651	71.74094	86.35308			55.652	915.787	0.034048	0.092549				1.08	0.00	1.96	32.33	-0.241488	-0.22686
410.0	206.3264	85.58911	84.32847	71.39135	71.11821	86.35319	71.53623	71.73522	86.29906			56.947	917.102	0.034705	0.095142				0.987878	-0.09	2.01	32.37	-0.241324	-0.22621
420.0	204.4167	85.27178	84.06429	71.32278	71.09002	86.66357	71.51429	71.66625	86.62722			58.234	918.423	0.034674	0.094883				0.906614	-0.17	2.06	32.42	-0.241332	-0.22628
430.0	203.0499	84.72218	83.99219	71.30766	71.05575	86.89063	71.51208	71.63864	86.96043			59.530	919.740	0.033755	0.09322				0.811389	-0.27	2.10	32.47	-0.241561	-0.22669
440.0	202.7579	84.44139	83.5698	71.20941	71.04327	83.56028	71.44548	71.5862	87.42875			60.822	921.060	0.034198	0.095766				0.73603	-0.34	2.15	32.51	-0.24145	-0.22606
450.0	201.0597	84.4603	83.3272	71.16557	70.94737	81.87292	71.38832	71.52446	82.82766			62.115	922.380	0.034548	0.094225				0.655893	-0.42	2.19	32.56	-0.241363	-0.22644
460.0	196.4594	84.07521	82.86862	71.11392	70.91195	81.2168	71.32919	71.48739	81.09583			63.422	923.698	0.032642	0.093694				0.576555	-0.50	2.24	32.61	-0.241839	-0.22658
470.0	192.6822	84.18891	82.36767	71.07764	70.83902	83.76531	71.33038	71.47735	82.15899			64.720	925.015	0.031875	0.097442				0.50595	-0.57	2.28	32.65	-0.242031	-0.22564
480.0	189.0338	83.98046	82.03728	71.04893	70.84655	85.32193	71.28503	71.45573	82.49148			66.015	926.332	0.031265	0.095323				0.446158	-0.63	2.33	32.70	-0.242184	-0.22617

Intertek Testing Services

Manufacturer:	**SBI**			RESULTS			
Model:	**2.5R Series**			**Average emission rate:(gr/hr)**			**0.380**
Date:	**11-3-21**			Burn Rate (Dry kg/hr):			1.086
Run:	**1 - Low**						
Project #:	**G104845527**						
Test Duration: (minutes)	**480**						
PRESSURE FACTOR:		1.00936	BAROMETRIC PRESSURE				
						Average:	30.2
TEMPERATURE FACTORS						Start:	30.2
	DGM #1:	0.99367				End:	30.2
	DGM #2:	0.99295					
			DRY GAS METER VALUES				
VOLUMES SAMPLED			avg sample flow rate dscfm		DGM #1	Final:	66.015
	DGM #1:	61.53873	0.128205698			Initial:	5.266
	DGM #2:	62.32269	0.129838945				
					DGM #2	Final:	926.332
TOTAL TUNNEL VOLUME (scf):		156826				Initial:	864.581
SAMPLE RATIOS			TEMPERATURES (DEG. RANKIN)				
	Sample Train 1:	2548.413				DGM #1:	531.363
	Sample Train 2:	2516.356				DGM #2:	531.749
TOTAL EMISSIONS			CALIBRATION FACTORS				
	Sample Train 1 (g):	**3.058**				DGM #1:	1.0100
	Sample Train 2 (g):	**3.020**				DGM #2:	1.0070
EMISSION RATES			TUNNEL FLOW RATE:				326.721
	Sample Train 1 (g/hr):	**0.38**					
	Sample Train 2 (g/hr):	**0.38**	PARTICULATE CATCH (mg)				
				Total Sample Train 1:			1.2
				Total Sample Train 2:			1.2
				Filter and seal Sample Train 1:			0.9
	MAX Allowed	7.50%		Filter and seal Sample Train 2:			1
				Probe Sample Train 1:			0.3
DEVIATION:		0.63%		Probe Sample Train 2:			0.2

	Room Temp		Bar Pressure		Relative Humidity		Air Velocity	
	Before	After	Before	After	Before	After	Before	After
	89	0	30.20	30.20	29.1	25.1	0	0

Average Dilution Tunnel Measurements						Sample Data	
Burn	Velocity	Flow Rate	Temp	Total Sample		Particulate Catch	
Time	(Ft/sec)	(dscf/min)	(R)	1	2	1	2
480	16.70	326.72	558.66	61.54	62.32	1.20	1.20

	Dilution Tunnel Dual Train Precision				
	Sample Ratios		Total Emissions (g)		
	Train 1	Train 2	Train 1	Train 2	Deviation (%)
	2548.41	2516.36	3.06	3.02	0.63%

Burn				Initial		Run	Average
Rate		Surface		Draft		Time	Draft
1.086		0.000		0.065		480.000	0.048

Run	Date	Burn Rate	Emission
1 - Low	2021-11-03	1.086	0.380

E&E Boiler Tunnel Traverse Worksheet

Static Pressure: **0.172**

Barometer: 30.2

	TUNNEL VELOCITY	TUNNEL TEMP	SQUARE ROOT
A CENTER	0.097	68.900	0.3114
B CENTER	0.098	69.100	0.3130
A1	0.088	69.000	0.2966
A2	0.098	68.900	0.3130
A3	0.084	69.000	0.2898
A4	0.072	68.900	0.2683
B1	0.082	69.100	0.2864
B2	0.092	69.100	0.3033
B3	0.092	69.100	0.3033
B4	0.072	69.100	0.2683
AVERAGE		69.02	0.2954

PITOT CONSTANT= 0.9459

E&E FUEL LOAD DATA SHEET

			Test Load Weight: Lower	Ideal	Upper	
Firebox Volume:	1.94	cu. ft	22.12	23.28	24.44	
Load Volume:	1.9400	cu. ft	Loading Density:	12.067	lbs./ft3	
Number of Spacers:			Load Density:	12.067	lbs./ft3	

Piece Size: Thick	x Wide	x Length	Weight lbs	Meter Moisture Content Dry Uncorrected %			
2	4	15.5	3.93	28.20	21.90	17.00	81.38
2	4	16.25	3.57	21.30	22.10	15.00	85.31
2	4	15.75	3.51	22.10	13.40	19.30	82.69
2	4	15.75	6.30	23.30	17.20	16.10	82.69
2	4	15.75	3.50	19.90	18.70	17.10	82.69
2	4	16.14	2.61	23.80	18.80	14.50	84.74
							0.00
							0.00
							0.00

Test Load Weigh 23.410 lbs. **Dry Weigh** 8.891 kg.

Average Moisture Content: %

Dry: 19.43 19.428 Wet: 16.267

Pre-test moisture content: %

#DIV/0! #DIV/0! Wet: #DIV/0!

Coal Bed Range: 4.7 lbs. to 5.8 lbs. 20% to 25% of test load

For Usable Firebox Volumes up to 3.0 ft^3 - Low and Medium Fire

Nominal Required Load Density (wet basis)	12	lb/ft^3				
Usable Firebox Volume	1.94	ft^3				
Total Nom. Load Wt. Target	23.28	lb				
Total Load Wt. Allowable Range	22.12	to	24.44	lb		
Core Target Wt. Allowable Range	10.476	to	15.13	lb		
Remainder Load Wt. Allowable Range	8.15	to	12.80	lb		
						Mid-Point
Core Load Fuel Pc. Wt. Allowable Range	3.49	to	5.82	lb		4.66
Remainder Load Pc. Wt. Allowable Range	2.33	to	6.98	lb		4.66
	Pc. #					Ordre
Core Load Piece Wt. Actual	1	3.93	**4**	In Range		
	2	3.57	**3.5**	In Range		
	3	3.51	**3.5**	In Range		
Core Load Total. Wt. Actual		11.00		In Range		
	Pc. #					
Remainder Load Piece Wt.	1	6.30	**6.5**	In Range		
(2 or 3 Pcs.)	2	3.50	**3**	In Range		
	3	2.61	**2.5**	In Range		
Remainder Load Piece Weight Ratio - Small/Large		41%		In Range		≤ 60%
Remainder Load Tot. Wt. Act		12.41	lb	In Range		
Total Load Wt. Actual		23.41	lb	In Range		
Core % of Total Wt.		47%		In Range		45-65%
Remainder % of Total Wt.		53%		In Range		35-55%
Actual Load % of Nominal Target		101%		In Range		95-105%
Actual Fuel Load Density		12.1	lb/ft^3			
Allowable Charcoal Bed Wt. Range (lb)	2.4	to	4.6			Mid-Point
Actual Charcoal Bed Wt.		3.9	lb	In Range		3.5
Actual Fuel Load Ending Wt.		0.4	lb	lb		≥ 90%
Total Wt. of Fuel Burned During Test Run lb.		23.0	lb			

Fuel Piece Moisture Reading (%-dry basis)

1	2	3	Ave.		Pc. Wt. Dry Basis			
28.2	21.9	17	22.4	In Range	3.21	lb	1.46	kg
21.3	22.1	15	19.5	In Range	2.99	lb	1.35	kg
22.1	13.4	19.3	18.3	In Range	2.97	lb	1.35	kg
23.3	17.2	16.1	18.9	In Range	5.30	lb	2.40	kg
19.9	18.7	17.1	18.6	In Range	2.95	lb	1.34	kg
23.8	18.8	14.5	19.0	In Range	2.19	lb	0.99	kg

Total Load Ave. MC % (dry basis)	19.4	In Range				
Total Load Ave. MC % (wet basis)	16.3					
Total Test Load Weight (dry basis)			19.60	lb	8.89	kg
Total Fuel Weight Burned During Test Run (dry basis)			19.2	lb	8.69	kg

Time	Flue	Room	Tunnel	DGM 3	DGM 3	Filter 3				Meter #1	Meter #2	Draft	Tunnel	CO	CO2	O2	scale	12.293676	Meter	Meter		
10.0	Temp 1	Temp 2	Dry Bulb 3	In 13	Out 14	15				21	22	23	24	%	%	%	Lbs	Corrected	#1	#2	Draft	Calculated
														25	25	27	28	Scale	Cu Ft	Cu Ft		Tunnel
0.0	447.1019	89.00607	132.4682	71.84824	71.84824	76.35659				245.896		0.064886	0.087599				23.41	11.12	8.68	0.00	-0.233779	-0.2281
10.0	632.7812	82.29305	146.3732	71.94973	71.94973	86.13806				247.114		0.081013	0.08807				20.25	7.96	8.72		-0.229747	-0.22798
20.0	510.6504	85.95367	118.8419	71.83351	71.83351	86.29416				248.314		0.073915	0.089023				18.45	6.16	8.77		-0.231521	-0.22774
30.0	498.9481	82.119	124.2167	71.73646	71.73646	84.77303				249.562		0.07168	0.089044				16.87	4.57	8.81		-0.23208	-0.22774
40.0	484.6865	82.0233	127.1207	71.89543	71.89543	86.42503				250.825		0.067809	0.089953				15.32	3.03	8.85		-0.233048	-0.22751
50.0	483.9501	81.19235	126.4243	71.99232	71.99232	86.20885				252.078		0.068259	0.092997				13.90	1.60	8.90		-0.232935	-0.22675
60.0	499.1211	79.3018	122.1423	71.99013	71.99013	85.01798				253.320		0.069675	0.09176				12.29	0.00	8.94		-0.232581	-0.22706

Intertek Testing Services

Manufacturer:	**SBI**
Model:	**2.5R Series**
Date:	**11-3-21**
Run:	**1 - LOW - 1st hour**
Project #:	**G104845527**
Test Duration: (minutes)	**60**

RESULTS

Average emission rate:(gr/hr) **#VALEUR!**

Burn Rate (Dry kg/hr): #VALEUR!

PRESSURE FACTOR:	1.00936

TEMPERATURE FACTORS

DGM #3:	0.99268
DGM #2:	1.14783

VOLUMES SAMPLED

DGM #3:	7.31218
DGM #2:	#VALEUR!
SAMPLE FLOW (dscfm)	0.12187
TOTAL TUNNEL VOLUME (scf):	18754

SAMPLE RATIOS

Sample Train 3:	2564.818
Sample Train 2:	#VALEUR!

TOTAL EMISSIONS

Sample Train 3 (g):	**1.539**
Sample Train 2 (g):	**#VALEUR!**

EMISSION RATES

Sample Train 3 (g/hr):	**1.54**
Sample Train 2 (g/hr):	**#VALEUR!**
MAX Allowed	7.50%
DEVIATION:	#VALEUR!

BAROMETRIC PRESSURE

Average:	30.2
Start:	30.2
End:	30.2

DRY GAS METER VALUES

DGM #3	Final:	253.320
	Initial:	245.896
DGM #2	Final:	0.000
	Initial:	0.000

TEMPERATURES (DEG. RANKIN)

DGM #3:	531.892
DGM #2:	460.000

CALIBRATION FACTORS

DGM #3:	0.9830
DGM #2:	NA

TUNNEL FLOW RATE: 312.574

PARTICULATE CATCH (mg)

Total Sample Train 3:	0.6
Total Sample Train 2:	
Filter and seal Sample Train 3:	0.5
Filter and seal Sample Train 2:	
Probe Sample Train 3:	0.1
Probe Sample Train 2:	

Ambient	Flue	Dilution Tunnel	Probe Top	Firebox Back	Firebox Right	Firebox Left	Firebox Bottom	DGM Inlet 1	DGM Outlet 1	Probe Temp 1	DGM inlet 2	DGM outlet 2	Probe Temp 2	Probe Temp 3	DGM Inlet 3	Manometre D	Manometre Ti	Trans Vacuum	Trans Pressio	Trans Pressio	Trans Vacuum	Massflow 1	Massflow 2	Balance	Weigth for BRDate	
68.1788664	67.9645262	67.7914538	66.8620469	67.0080752	66.7051598	66.6513316	66.8399331	66.6905554	66.7235195	78.8275945	66.7326993	66.8411849	78.689051	76.6479147	67.9741178	0.00101558	0.09732439	0.33786023	0.31017371	-0.19116546	-0.01604386	-0.00277296	0.19620405	9.30480528		10:20:12
68.2759106	127.301095	75.7286386	68.2062764	66.9912759	66.7501134	66.6787609	66.8439947	67.1385471	66.7868319	79.9890531	67.0847296	66.9516403	79.4740278	77.7968814	68.1808406	0.02176508	0.09528391	0.70529696	0.3247864	-0.17197707	0.44492396	0.43882835	0.45013833	9.22910626		10:21:12
68.5341522	161.332838	93.9340171	72.0632715	67.0081207	67.1370347	66.8883781	66.8591716	67.1779185	66.801592	80.5805589	67.1366175	66.9863461	80.466593	79.0922552	68.2276984	0.0256782	0.0955133	0.72360192	0.3383091	-0.1681621	0.42596253	0.43931827	0.45232001	9.12664028		10:22:12
68.9252385	213.7746822	77.8535337	79.9008647	67.0386338	66.9053111	67.0117964	66.8830112	67.2155211	66.8250149	81.2389983	67.1279137	66.9852311	81.3690736	80.217559	68.2402646	0.0396704	0.09551262	0.72689657	0.31948405	-0.16530087	0.44183093	0.4814778	0.41740003	8.95252803		10:23:12
69.2536584	260.705299	80.062098	95.8285483	67.1533397	70.3823903	68.8614393	66.9668514	67.2563813	66.8554514	81.711182	67.1975606	67.0315192	82.1799587	81.2928302	68.2986176	0.0429223	0.09469814	0.73782299	0.32964594	-0.16486942	0.53430478	0.46163353	0.4627383	8.82920824		10:24:12
69.36196	267.38856	79.8800587	115.880279	67.3159781	73.1571626	70.4181567	67.0644217	67.272594	66.8558121	82.1521602	67.2158597	67.0577465	82.930451	82.2635415	68.3219108	0.04041274	0.09584568	0.72291595	0.32618295	-0.15311795	0.55636663	0.47718086	0.48999044	8.71567406		10:25:12
69.5506537	284.1318572	82.3396389	135.687571	67.6037071	76.4024242	72.3590657	67.1778109	67.3092178	66.862402	82.6455812	67.2545702	67.0622497	83.6408995	83.1104037	68.3751945	0.04610084	0.09510194	0.71662415	0.3375938	-0.16461963	0.501228	0.47882143	0.45167747	8.58003213		10:26:12
69.650396	323.95768	86.1425633	159.074178	68.0271672	80.2150579	74.8154769	67.3302255	67.3239983	66.8976	83.1064142	67.2868417	67.0974445	84.3446997	84.0113149	68.3970258	0.05237505	0.09233886	0.70584525	0.34340708	-0.15840895	0.53831737	0.47351557	0.46946856	8.44434103		10:27:12
69.7125794	346.6367996	88.2302447	189.254411	68.580152	84.9138145	77.8158512	67.5334642	67.3728714	66.9264859	83.4901218	67.3274026	67.1217387	85.0552154	84.9154682	68.4392335	0.05385925	0.09388646	0.7472447	0.35649833	-0.1578526	0.57088028	0.4643217	0.44359329	8.29343473		10:28:12
69.8404588	354.738371	89.0546979	218.9184491	69.2353874	89.8054245	81.2572688	67.7148611	67.3888248	66.9347725	83.6042864	67.3369552	67.122118	85.6132373	85.5260254	68.4587914	0.05212359	0.09065642	0.73048134	0.35118462	-0.15458263	0.52671234	0.45719149	0.41694763	8.1718934		10:29:12
70.002082	366.517932	90.5933366	246.264983	70.0183303	94.3039791	85.0439824	67.9504618	67.4266109	66.9385146	83.8457768	67.3577835	67.1429444	86.0582945	86.0735835	68.4754356	0.0544661	0.09327049	0.73435624	0.34348656	-0.15136943	0.58527592	0.44246229	0.3920083	8.03163733		10:30:12
70.151287	362.611293	90.8778164	271.0503889	70.8918582	98.5171284	89.1751901	68.2269927	67.4120706	66.9364877	83.275761	67.3369855	67.148427	86.4008814	86.4950762	68.4867517	0.0543003	0.09439667	0.74021038	0.35085535	-0.15005235	0.5428094	0.44388997	0.36951619	7.90887485		10:31:12
70.3567524	376.2926222	92.6395542	293.169811	71.8880749	102.3667709	93.4901387	68.6227018	67.4722315	66.9962449	83.2183327	67.3754577	67.1888624	86.8637177	86.857033	68.5110281	0.05741171	0.09085385	0.73636252	0.35749749	-0.14842877	0.58725271	0.44293161	0.50518024	7.77658904		10:32:12
70.5502915	392.705794	94.1303493	315.752158	72.9367758	106.153203	97.7405695	68.8131236	67.4533124	66.9614671	82.8928809	67.3748916	67.1663119	86.4446209	86.913472	68.496287	0.05940396	0.0961489	0.74418117	0.35596469	-0.15779583	0.53196411	0.43958301	0.50130206	7.63910719		10:33:12
70.767903	390.187	94.1268464	338.4969951	74.0848866	109.829312	101.583783	69.170128	67.4772914	67.0071466	82.5321205	67.3980373	67.1861224	86.0824675	86.7918243	68.5023269	0.05652964	0.09314091	0.76270495	0.37775316	-0.15040433	0.58225665	0.43603195	0.4924098	7.5176765		10:34:12
70.9806937	397.3883529	95.3152226	358.9700407	75.28074	113.463601	104.918449	69.5526909	67.4914483	67.0207946	82.1702478	67.4159597	67.1886111	85.4849015	86.4671171	68.4884696	0.05834494	0.09199147	0.76572689	0.37483516	-0.14834924	0.61397131	0.44330444	0.46708363	7.38846408		10:35:12
71.2124849	407.2996927	96.2195609	378.0456669	76.5234976	117.068434	108.005267	69.9858819	67.4687889	67.0295157	81.9282738	67.4087226	67.2105755	84.9948302	86.1632973	68.5080038	0.06039136	0.09267615	0.76363926	0.39159377	-0.14938246	0.60009692	0.45365282	0.48148337	7.26191109		10:36:12
71.4351301	414.555466	97.4747579	395.6359568	77.8132334	120.5653617	111.2254554	70.451096	67.4803622	67.0244031	81.8039292	67.4411527	67.202126	84.5514537	85.881371	68.5129008	0.06087674	0.09108678	0.77393134	0.37754878	-0.14703217	0.56755367	0.3508595	0.47324183	7.12617082		10:37:12
71.6685298	416.624687	97.6643751	412.0077443	79.1244648	123.979151	114.7314483	70.9482263	67.493976	67.0463638	82.1801993	67.4581037	67.1902939	84.144743	85.4522107	68.4944052	0.06033645	0.09443968	0.78511593	0.38161354	-0.14338751	0.61505806	0.49175906	0.47028157	6.99218851		10:38:12
71.9330056	428.711157	99.5427157	427.789532	80.4806947	127.380731	118.4010066	71.530052	67.5153987	67.0948523	82.6113398	67.4657627	67.2121378	83.8139955	85.1518288	68.4924714	0.06251826	0.09347095	0.77528608	0.40550252	-0.1556272	0.56229207	0.47329429	0.44650274	6.85770217		10:39:12
72.2023952	429.747806	99.9227564	442.203552	81.8814762	130.783252	122.012686	72.1220712	67.5079962	67.0557977	83.0779298	67.4491824	67.2172484	83.5029248	84.8410184	68.5117543	0.06346768	0.09230641	0.77117269	0.38981118	-0.13943629	0.56294117	0.47485965	0.46049434	6.71959746		10:40:12
72.3478303	417.784908	98.9220697	453.8159774	83.3210478	134.461473	125.7327388	72.8105346	67.5419766	67.074349	83.5449086	67.4885863	67.2316287	83.2171773	84.590623	68.5490541	0.06086237	0.09367615	0.8092209	0.40311816	-0.136541	0.5797242	0.49268681	0.4758715	6.58548812		10:41:12
72.5540552	407.4412021	98.3568033	461.702914	84.7984486	138.327569	129.0898221	73.4975638	67.553988	67.1054639	83.9843047	67.5176096	67.2672328	82.9438516	84.2405635	68.5597192	0.06199312	0.09274822	0.80999051	0.40926071	-0.15099474	0.61269771	0.48580575	0.48077035	6.44524434		10:42:12
72.5373186	409.555046	98.9382255	467.234401	86.2908971	142.159789	132.5486614	74.2896266	67.5592279	67.1020338	84.2644613	67.5187684	67.2793331	82.5943986	83.8723185	68.558376	0.06190561	0.09526884	0.80186946	0.40562741	-0.14939382	0.60479548	0.50364766	0.47773796	6.33044802		10:43:12
72.7756058	412.919736	98.9840691	472.052702	87.8655292	145.960602	136.2477165	75.1590499	67.5761991	67.1473773	84.5885751	67.5369913	67.3025639	82.2481568	83.5519625	68.5619983	0.06212364	0.09522786	0.80868249	0.40474179	-0.14932569	0.56741107	0.49502256	0.4716568	6.20229691		10:44:12
72.9993177	442.8694459	103.108877	478.4315586	89.428971	149.7096925	140.8521898	76.1199021	67.6056965	67.157273	85.0172517	67.5689918	67.2986929	82.0058076	83.3130884	68.6066539	0.06626512	0.09491827	0.81545127	0.41132716	-0.14794049	0.56941736	0.47208789	0.47932717	6.02365656		10:45:12
73.145546	481.3652221	105.1111523	491.433388	90.9770392	153.65197	144.552039	77.0835102	67.6342204	67.1424675	85.3851393	67.5750442	67.3214321	81.8585936	83.0769967	68.6879709	0.0689223	0.09139411	0.80814404	0.42918711	-0.12415371	0.57282348	0.47114375	0.47912139	5.84156585		10:46:12
73.1976359	473.8585555	106.486141	507.11587	92.571899	157.7330335	149.060619	78.1199868	67.6375981	67.1287931	85.7446675	67.5697146	67.3148504	82.3762811	83.0613616	68.5834495	0.06690816	0.09042444	0.81808031	0.43369468	-0.15135807	0.59399444	0.49257043	0.46862441	5.65704514		10:47:12
73.4248764	489.6943336	108.5300334	524.3953838	94.2889187	162.060123	154.1346422	79.2164882	67.6728684	67.173981	86.1361418	67.6495117	67.38256	83.2137914	83.1835809	68.6440318	0.06935469	0.09266278	0.8065508	0.44836415	-0.11599013	0.59614088	0.47482359	0.46337265	5.45797716		10:48:12
73.6112849	517.663804	112.122891	544.3922608	96.0282064	166.63161	159.5535052	80.3492827	67.6946387	67.1924852	86.5328565	67.6345787	67.3538564	84.2506697	83.3359513	68.6436971	0.07390134	0.09086891	0.81404573	0.4082502	-0.11390098	0.59546228	0.47122407	0.46885579	5.24525934		10:49:12
73.8796842	534.0798	114.389419	567.4884475	97.8682922	171.8313352	164.4685175	81.5331172	67.7131601	67.1896887	86.7420503	67.6843619	67.3832293	85.251105	83.60632	68.6447008	0.0712578	0.09034436	0.80732037	0.3741085	-0.12585682	0.56100126	0.45812744	0.45112017	5.01921952		10:50:13
74.1888721	539.238925	115.19147	592.428972	99.7645889	177.089268	169.7432572	82.766463	67.6833796	67.2182856	87.0979178	67.6579376	67.400581	86.2159717	83.833704	68.6937256	0.07459087	0.0906234	0.80963646	0.39305845	-0.12481225	0.62701467	0.46888857	0.44915481	4.820045		10:51:13
74.259723	550.9692994	117.5376656	619.2127102	101.7151683	182.5998807	175.0956783	83.9720467	67.6777126	67.2059426	87.3041607	67.6443458	67.4082615	87.1187377	84.0390607	68.674304	0.07480624	0.09023836	0.81532996	0.3899701	-0.12170123	0.5854677	0.50324115	0.48694003	4.5990291		10:52:13
74.5391035	561.6750969	119.5854447	648.3006806	103.8504028	188.4172271	180.5817864	85.3366938	67.7340317	67.2345215	87.8921225	67.7227708	67.4458711	88.0485752	84.2458928	68.7081105	0.07714506	0.08778192	0.81386295	0.3882725	-0.14193419	0.60140986	0.49754846	0.47478753	4.38506145		10:53:13
75.0135472	564.857968	120.248341	676.8866693	106.0486995	194.577849	186.122533	86.7525861	67.7346418	67.2607985	88.3088043	67.729637	67.4681177	88.8935533	84.4681821	68.7966552	0.0759979	0.08855945	0.8169314	0.43121949	-0.14674832	0.57684753	0.47939184	0.47762486	4.16672962		10:54:13
74.937519	575.554256	121.585872	700.3890531	108.3008893	201.0404341	191.6664044	88.2370149	67.7692857	67.2837696	88.5255024	67.7634468	67.5036001	89.4162771	84.5517476	68.8291975	0.07724548	0.09050757	0.81482184	0.36982801	-0.13062553	0.59787426	0.47893125	0.46141881	3.95800309		10:55:13
75.5797431	575.577892	122.061821	719.5340846	110.5705152	207.4837596	197.1686964	89.8396517	67.7536482	67.2931521	88.9107741	67.7457222	67.4858731	89.131844	84.4499023	68.8454249	0.07884479	0.08805507	0.81802252	0.35671406	-0.10732697	0.62286851	0.45489899	0.45487708	3.75767708		10:56:13
75.9085965	568.6282934	120.878018	730.8805405	112.963428	214.988241	202.812866	91.4059468	67.7580566	67.2846355	87.0405316	67.7492982	67.5023804	88.5156293	84.1994038	68.8392336	0.07580167	0.08849168	0.81948844	0.34505342	-0.10748593	0.61211992	0.4901019	0.46444136	3.56797262		10:57:13
76.1942876	555.156997	119.221243	734.8430661	115.4146222	222.40698	208.8097763	93.0900317	67.8055127	67.2916383	86.1878077	67.772565	67.5160563	87.7853605	83.9283725	68.8249716	0.07513255	0.0910225	0.80572664	0.3004568	-0.12097457	0.59012938	0.48408303	0.47603491	3.42131575		10:58:13
76.0715386	541.2994011	118.0893827	732.4585883	117.9164643	230.1208908	214.8383	94.4317767	67.8172705	67.2913898	85.3827002	67.732605	67.5147379	86.8973346	83.8877246	68.8073083	0.07405745	0.08991685	0.80731295	0.30473538	-0.11408197	0.59241112	0.48148134	0.48021304	3.27280535		10:59:13
76.7641095	531.893861	116.747847	727.203791	120.46096	237.934994	220.8238225	96.7104513	67.8618632	67.3225563	84.5033534	67.8009737	67.5461368	86.0498448	83.2717924	68.8141821	0.07196979	0.0887529	0.8048371	0.27203537	-0.09907256	0.58419802	0.48974293	0.46771961	3.13920546		11:00:13
76.6622012	524.764962	116.231839	720.41716	123.0402887	245.8189995	226.734673	98.6530114	67.8441713	67.341152	83.684985	67.7770254	67.5392872	85.2442724	82.9488063	68.8290131	0.07212946	0.0895815	0.81096907	0.27539665	-0.09583665	0.58601353	0.48539269	0.47553497	2.99926902		11:01:13
76.7739605	520.3698698	114.4993998	713.4801991	125.6421444	253.6683889	232.5992602	100.556166	67.8625824	67.3324453	82.9890144	67.7733329	67.5435193	84.6037315	82.6019905	68.7957254	0.0738137	0.09409954	0.8036225	0.2644622	-0.10297836	0.61141919	0.44942039	0.43985444	2.8837392		11:02:13
78.1004247	516.2959685	113.2704607	708.2244021	128.2244621	261.2974614	238.4486899	102.791847	67.8787341	67.3423104	82.3459981	67.7940283	67.5579544	83.8810051	82.2793381	68.7622327	0.07318345	0.09361056	0.80350094	0.26750509	-0.10603611	0.61322387	0.44096855	0.43543207	2.67081968		11:03:13
78.1852515	517.3726082	113.3763708	700.150995	130.7975532	268.7491475	244.3184925	105.208724	67.825921	67.3466749	81.705985	67.7967272	67.5610767	83.1521176	81.9967071	68.7507427	0.07093645	0.09085621	0.81528408	0.30280491	-0.10132066	0.60346778	0.43820384	0.44643554	2.6534167		11:04:13
78.8522443	629.810228	188.9661167	695.2749545	134.6732299	275.9902546	250.139591	107.567974	67.8325037	67.3749503	81.2233316	67.7899641	67.5338745	82.8338151	81.7203911	68.7166857	0.07707044	0.08246268	0.81817796	0.25625321	-0.1065776	0.61099384	0.43380278	0.39273279	2.34858445		11:05:13
79.4659929	688.4978717	239.0922355	698.9972467	138.990744	283.0341105	255.8804577	109.9258884	67.8744179	67.4012487	80.5827691	67.8044777	67.5534488	83.1904864	82.6830467	68.7193572	0.06873159	0.08627529	0.82318222	0.2177866	-0.11234547	0.59910606	0.41900309	0.39514559	2.16456541	16.8506742	11:06:13
80.8395683	634.781769	204.331241	690.9350667	145.0991221	290.0089353	261.9261223	113.253005	67.8344773	67.3760901	81.7140678	67.8006959	67.5542011	84.1502802	83.8776752	68.7330323	0.09030977	0.08140401	0.83169584	0.16447822	-0.10586229	0.64338219	0.44390472	0.42893457	2.21755607	16.6759996	11:07:13
80.484372	647.9282911	151.2819665	701.1994433	148.3005994	297.0138465	268.2926411	116.461314	67.851513	67.3893751	82.5152439	67.8177319	67.5587259	84.4281597	84.4194746	68.7546463	0.08371778	0.08818474	0.83677304	0.20509175	-0.10426137	0.62819976	0.45421812	0.45884046	20.8496948	16.5011449	11:08:13
76.7145869	661.5211251	151.5636907	728.9614438	150.4616666	303.0368863	274.094234	120.48424	67.8751601	67.4129673	83.4127941	67.8500774	67.578523	84.347328	84.5971212	68.8057364	0.08568217	0.0861919	0.82937238	0.17308461	-0.09497374	0.64796519	0.45107427	0.44728461	20.4770965	16.1285466	11:09:13
75.4673663	668.9574611	153.4514466	759.1737295	153.8609574	309.0347073	279.8668408	123.8178	67.7536482	67.4129673	84.3193031	67.8844502	67.5787138	84.8447552	84.9193373	68.8346022	0.08481873	0.08472158	0.83522585	0.18074887	-0.08790115	0.63496854	0.45350258	0.44277208	20.1696248	15.8217049	11:10:13
75.2746158	678.455254	150.973924	787.8487671	153.085594	315.971659	286.87367	125.721845	67.8827885	67.4202402	85.0695028	67.8448374	67.5812467	84.3020126	84.8478887	68.8659451	0.08826401	0.08602356	0.82420667	0.14081633	-0.10713395	0.62678847	0.45749286	0.43934016	19.849835	15.5012852	11:11:13
75.4850189	681.827399	151.533691	813.4679184	154.627024	321.3209905	292.6342244	127.6576	67.8841908	67.4170544	85.8136898	67.8324772	67.5822321	84.1954503	84.9828293	68.8581761	0.08442899	0.08634745	0.82107921	0.15453205	-0.09528894	0.63096333	0.45265611	0.43538266	19.5361224	15.1875725	11:12:13
75.2125275	693.8674211	153.3696922	836.6249574	156.4695746	326.8208408	298.1596	129.6054	67.8827885	67.4202402	86.3980805	67.8202753	67.5805193	84.8485139	84.8877346	68.8915373	0.08526841	0.08725058	0.82658	0.16452918	-0.08961111	0.61742018	0.43812524	0.43966964	19.2029327	14.8543829	11:13:13
75.0523089	701.091384	154.846541	858.0283496	158.4923665	330.0906814	302.5640403	130.514168	67.9399424	67.4640586	86.6234022	67.8819745	67.6150515	84.0753651	85.4023086	68.9389125	0.08621921	0.08508856	0.81460548	0.17770572	-0.08976222	0.63831728	0.43446717	0.43916008	18.8662272	14.5176773	11:14:13
74.2278798	713.722856	157.339125	877.9492625	160.4033364	334.0259444	306.8880741	131.825338	67.9381259	67.4764238	86.4485072	67.8884987	67.6199082	84.0454348	85.6075916	68.9320947	0.09029847	0.08530626	0.82114314	0.14504004	-0.09743757	0.59403378	0.44786495	0.43923465	18.5336687	14.1851188	11:15:13
74.3789149	726.2051101	159.097452	898.0425667	162.4070554	337.5281984	310.79214	133.031019	67.9290715	67.4586078	86.0627192	67.9023813	67.6141892	84.0554818	85.6783868	68.9543071	0.08724618	0.08540819	0.81638803	0.16917881	-0.09574581	0.61530147	0.44916314	0.43207031	18.1662418	13.8176919	11:16:13
74.7162592	736.1280424	160.6415735	914.9157736	164.4191737	341.0741986	314.4417977	134.344645	67.9780387	67.5023106	85.7244788	67.9360283	67.6579544	83.881051	85.2279381	68.9622397	0.08437178	0.08524357	0.82001952	0.15114884	-0.09436141	0.61326161	0.43660111	0.43607002	17.8186035	13.4680516	11:17:13
74.7364827	741.2721033	162.88483	934.2888465	167.5644993	344.239139	317.75239	135.626218	67.9291453	67.4574303	85.4924648	67.8811861	67.6367859	84.2652668	86.0384123	68.9685531	0.09004669	0.08570635	0.81828368	0.14546015	-0.07366214	0.63417193	0.43758302	0.43938934	17.4481235	13.0995736	11:18:13
74.4066432	748.046871	164.080878	949.232587	170.3014024	347.5729273	321.0055512	136.893387	67.944793	67.4722472	85.3240291	67.8993364	67.6490991	84.4606965	86.1452367	68.9979484	0.09005679	0.08314609	0.8186697	0.15583777	-0.08384674	0.64978954	0.3422788	0.34800263	17.1029518	12.754402	11:19:13
74.0290841	752.6958359	165.2229275	962.7709047	173.0422422	350.7007226	324.1637113	138.1604	67.9718522	67.5139777	85.1859033	67.9221408	67.6596617	84.6537756	86.3786338	69.0249343	0.09266769	0.08427733	0.82015966	0.13597949	-0.0867292	0.66450726	0.33553707	0.34403594	16.8733982	12.3848483	11:20:13
74.5464951	765.82731	167.699792	976.0355596	175.7905057	354.5965313	327.2330096	139.64646	67.9954274	67.5116307	84.9889217	67.9478867	67.665957	84.8334572	86.3640423	69.0106275	0.09176683	0.08516224	0.82066369	0.12381928	-0.05606332	0.63949499	0.34022825	0.33887433	16.381711	12.0331611	11:21:13
75.1713251	773.9684636	169.354827	988.138472	178.5069331	358.281614	330.279511	140.852924	68.0043264	67.5251199	84.9704566	67.9380196	67.6773598	84.9704566	86.1304338	69.0049335	0.09296645	0.08463412	0.82767586	0.14313256	-0.0714708	0.65794993	0.33170315	0.33438312	16.0318433	11.6832934	11:22:13
74.4871408	778.2553991	170.4911	998.9482194	181.2177727	361.9843113	334.0566482	142.0022	68.0024668	67.5322682	84.9133446	67.9721262	67.6785605	85.1217255	86.1180286	69.0489815	0.09324298	0.08452831	0.81755979	0.15366455	-0.07122101	0.62104005	0.32555314	0.3259286	15.6749438	11.3253939	11:23:13
74.0894302	778.4860207	170.6336888	1009.03096	183.8766653	365.76596	336.527551	143.110868	68.0036019	67.5173043	84.9656037	67.9468867	67.6741327	85.2711243	86.2308693	69.0429734	0.09103701	0.08577895	0.81875821	0.15909639	-0.06888207	0.61731268	0.31723456	0.3276463	15.3139831	10.9654333	11:24:13
74.0478603	781.6921066	171.6168554	1018.26589	186.6804646	369.731844	339.7004471	144.38899	68.0248792	67.560693	84.9685073	67.958573	67.6787301	85.4104413	86.1430462	69.0871647	0.09067643	0.08378721	0.82243641	0.16208251	-0.07167518	0.65903668	0.31477751	0.33367993	14.9478839	10.5993341	11:25:13
74.412298	784.080936	172.0343555	1026.345665	189.5186006	373.6622557	342.9479981	145.436154	68.0205251	67.5242208	84.8430434	67.9475464	67.6697874	85.5144231	86.1314317	69.0936497	0.09331477	0.08304054	0.82387229	0.1426784	-0.05772102	0.62924963	0.30615242	0.31819509	14.6036102	10.2550762	11:26:13
73.5662547	783.14729	172.4380668	1035.604776	192.3618819	377.753849	346.2245342	146.5943776	68.0702787	67.5838962	84.6861922	67.9772846	67.7222223	85.5666313	86.4804728	69.1358758	0.09249644	0.08439758	0.82423772	0.13839647	-0.05412651	0.62020828	0.30283647	0.32972163	14.2521192	9.9035698	11:27:13
74.4898268	782.785156	172.5936318	1038.40336	194.954609	382.13673	349.5170454	147.879783	68.0982951	67.5978378	84.582322	68.0119745	67.7275508	85.6220929	86.4801101	69.1717972	0.08991588	0.08244011	0.83063369	0.15184114	-0.04936442	0.66277389	0.28731393	0.29996307	13.901059	9.55250916	11:28:13
74.012471	782.6437666	172.6761023	1042.57252	197.7372633	386.4746863	352.8794265	149.043382	68.1378405	67.6015224	84.4362678	68.0356751	67.729984	85.6154113	86.4804786	69.1742288	0.09318699	0.08411185	0.83522161	0.16577259	-0.05384928	0.63331384	0.30231358	0.29503586	13.5633093	9.21495947	11:29:13
74.3565358	780.3390044	172.7917504	1045.226211	200.3202952	390.3991138	356.1521572	150.32172	68.138482	67.6025924	84.2176979	68.0729364	67.7410524	85.5962755	86.4804928	69.2086202	0.0924694	0.08349655	0.83724763	0.18519963	0.04693483	0.64840301	0.30601886	0.27925774	13.2175762	8.8640283	11:30:13
75.1451435	781.8638111	172.9277796	1048.90135	202.9663775	395.542249	359.9631851	151.522834	68.1477746	67.6231376	84.1152352	68.0439417	67.7432566	85.5438332	86.4801539	69.2195846	0.09273868	0.08307389	0.82919044	0.17515105	-0.05571135	0.66017013	0.30529352	0.26898848	12.8818371	8.53328718	11:31:13
75.7441355	777.8315526	172.088228	1050.694665	205.5816553	400.1829968	363.4408751	152.627281	68.1682782	67.6328802	84.0637772	68.0425237	67.7631088	85.5395344	86.4801539	69.2348285	0.09009794	0.08597488	0.83616329	0.17007578	-0.04065584	0.67008112	0.33312427	0.31161563	12.5481885	8.19963862	11:32:13
74.5532461	773.4081854	171.7612295	1051.63124	208.2300818	404.9572568	367.1610443	153.976515	68.2048671	67.640198	84.025019	68.095193	67.7899274	85.505353	86.4801539	69.2522035	0.09076385	0.08493374	0.83943581	0.16662414	-0.04374415	0.65706972	0.33188673	0.30915039	12.2205432	7.87199336	11:33:13
74.1679269	769.6151446	171.123795	1051.042499	210.8092128	409.7135601	371.5957597	155.095769	68.2381912	67.6667114	83.8646

Time	Flue	Room	Tunnel	DGM 1	DGM 1	Filter 1	DGM 2	DGM 2	Filter 2	DGM 3	Filter 3	Meter #1	Meter #2	Draft	Tunnel	CO	CO2	O2	scale	2.2648445	Meter	Meter	Draft	Calculated
10.0	Temp 1	Temp 2	Dry Bulb 3	In 13	Out 14	15	In 16	Out 17	18	In 19	20	21	22	23	24	% 25	% 25	% 27	Lbs 28	Corrected Scale	#1 Cu Ft	#2 Cu Ft		Tunnel
0.0	67.96453	68.17887	67.79145	66.69056	66.72352	78.82759	66.7327	66.84118	78.68905			67.558	927.779	0.001016	0.097324				9.30	7.04	2.38	32.75	-0.249746	-0.22567
10.0	366.5179	70.00208	90.59334	67.42661	66.93851	83.44578	67.35778	67.14294	86.05829			68.743	928.983	0.054466	0.09327				8.03	5.77	2.43	32.79	-0.236383	-0.22668
20.0	429.7478	72.2024	99.92276	67.508	67.0558	83.07793	67.44918	67.21725	83.50292			69.928	930.182	0.063468	0.092306				6.72	4.45	2.47	32.84	-0.234133	-0.22692
30.0	534.0798	73.87968	114.3894	67.71316	67.18967	86.74205	67.66436	67.38323	85.25111			71.111	931.383	0.071258	0.090344				5.02	2.75	2.51	32.88	-0.232186	-0.22741
40.0	531.8939	76.76411	116.7478	67.86186	67.32256	84.50335	67.80097	67.54614	86.04984			72.305	932.577	0.07197	0.088753				2.26	0.00	2.55	32.92	-0.232008	-0.22781
50.0	668.9575	75.46734	150.3351	67.88187	67.39471	84.12077	67.81848	67.58325	84.3193			73.478	933.765	0.086493	0.086612				20.17	17.90	2.59	32.96	-0.228377	-0.22835
60.0	758.9067	74.02908	166.0584	67.97185	67.5014	85.18591	67.92014	67.65906	84.65378			74.628	934.925	0.092968	0.084277				16.73	14.47	2.63	33.00	-0.226758	-0.22893
70.0	780.339	74.35654	173.0175	68.13848	67.60258	84.2177	68.02798	67.74105	85.53628			75.759	936.068	0.092469	0.083497				13.21	10.95	2.67	33.04	-0.226883	-0.22913
80.0	743.0534	74.63496	166.3231	68.23721	67.72803	82.71309	68.10419	67.80477	84.3818			76.884	937.206	0.089248	0.087086				10.12	7.85	2.71	33.08	-0.227688	-0.22823
90.0	704.0898	76.71736	158.2451	68.34366	67.83242	83.84792	68.21899	67.90457	83.2641			78.017	938.350	0.083893	0.087307				7.64	5.37	2.75	33.12	-0.229027	-0.22817
100.0	625.8772	77.16043	145.686	68.5226	67.97929	85.80668	68.38668	68.06352	82.92024			79.160	939.502	0.078604	0.089366				6.19	3.92	2.79	33.16	-0.230349	-0.22766
110.0	572.3791	81.39216	141.4348	68.6871	68.12131	85.88503	68.5095	68.23557	82.50074			80.300	940.645	0.073488	0.090523				5.04	2.77	2.83	33.20	-0.231628	-0.22737
120.0	505.3773	84.81656	133.8337	68.88063	68.29864	85.41561	68.72223	68.40121	84.99435			81.439	941.797	0.067886	0.09032				4.39	2.13	2.87	33.25	-0.233028	-0.22742
122.0	497.2324	83.22208	132.9564	68.91876	68.35887	85.39555	68.77453	68.46394	86.20102			81.672	942.036	0.067339	0.092512				4.35	2.08	2.88	33.25	-0.233165	-0.22687

Intertek Testing Services

Manufacturer:	**SBI**
Model:	**2.5R Series**
Date:	**11-4-21**
Run:	**1 - HIGH**
Project #:	**G104845527**
Test Duration (min):	**122**
Test Duration (high only):	**76**

RESULTS

Average emission rate:(gr/hr) 3.116

Burn Rate (Dry kg/hr): 4.992

PRESSURE FACTOR:	1.01270

TEMPERATURE FACTORS

DGM #1:	1.00035
DGM #2:	1.00031

VOLUMES SAMPLED

	DGM #1:	14.44124
	DGM #2:	14.54359
TOTAL TUNNEL VOLUME (scf):		38263

SAMPLE RATIOS

Sample Train 1:	2649.581
Sample Train 2:	2630.935

TOTAL EMISSIONS

Sample Train 1 (g):	**6.094**
Sample Train 2 (g):	**6.577**

EMISSION RATES

Sample Train 1 (g/hr):	**3.00**
Sample Train 2 (g/hr):	**3.23**
MAX Allowed	7.50%
DEVIATION:	3.81%

BAROMETRIC PRESSURE

Average:	30.3
Start:	30.3
End:	30.3

DRY GAS METER VALUES

avg sample flow dscfm	DGM #1	Final:	81.672
0.11837081		Initial:	67.558
0.11920975			
	DGM #2	Final:	942.036
		Initial:	927.779

TEMPERATURES (DEG. RANKIN)

DGM #1:	527.815
DGM #2:	527.838

CALIBRATION FACTORS

DGM #1:	1.0100
DGM #2:	1.0070

TUNNEL FLOW RATE: 313.633

PARTICULATE CATCH (mg)

Total Sample Train 1:	2.3
Total Sample Train 2:	2.5
Filter and seal Sample Train 1:	2
Filter and seal Sample Train 2:	2
Probe Sample Train 1:	0.3
Probe Sample Train 2:	0.5

	Room Temp		Bar Pressure		Relative Humidity		Air Velocity	
	Before	After	Before	After	Before	After	Before	After
	68	83	30.30	30.30	26.9	27.1	0	0

Average Dilution Tunnel Measurements						Sample Data	
Burn	Velocity	Flow Rate	Temp	Total Sample		Particulate Catch	
Time	(Ft/sec)	(dscf/min)	(R)	1	2	1	2
122	16.95	313.63	592.67	14.44	14.54	2.30	2.50

	Dilution Tunnel Dual Train Precision				
	Sample Ratios		Total Emissions (g)		
	Train 1	Train 2	Train 1	Train 2	Deviation (%)
	2649.58	2630.93	6.09	6.58	3.81%

Burn				Initial		Run	Average
Rate		Surface		Draft		Time	Draft
4.992		0.000		0.001		122.000	0.071

Run	Date	Burn Rate	Emission
1 - HIGH	2021-11-04	4.992	3.116

E&E Boiler Tunnel Traverse Worksheet

Static Pressure: **0.175**

Barometer: 30.3

	TUNNEL VELOCITY	TUNNEL TEMP	SQUARE ROOT
A CENTER	0.098	66.600	0.3130
B CENTER	0.098	66.800	0.3130
A1	0.090	66.700	0.3000
A2	0.100	66.600	0.3162
A3	0.084	66.600	0.2898
A4	0.074	66.600	0.2720
B1	0.088	66.800	0.2966
B2	0.095	66.700	0.3082
B3	0.093	66.800	0.3050
B4	0.073	66.700	0.2702
AVERAGE		66.69	0.2984

PITOT CONSTANT= 0.9533

E&E FUEL LOAD DATA SHEET

			Test Load Weight: Lower	Ideal	Upper	
Firebox Volume:	1.94	cu. ft	22.12	23.28	24.44	
Load Volume:	1.9400	cu. ft	Loading Density:	9.988	lbs./ft3	
Number of Spacers:			Load Density:	9.988	lbs./ft3	

Piece Size: Thick	x	Wide	x	Length	Weight lbs	Meter Moisture Content Dry Uncorrected %			
2		4		15.75	3.76	25.40	17.70	18.60	82.69
2		4		15.75	3.60	20.60	18.60	26.60	82.69
2		4		15.75	3.62	18.70	22.00	17.50	82.69
2		4		16.25	5.07	24.80	26.50	15.80	85.31
2		4		15.75	3.32	14.80	17.70	28.00	82.69
									0.00
									0.00
									0.00
									0.00

Test Load Weigh 19.376 lbs. **Dry Weigh** 7.270 kg.

Average Moisture Content: %

Dry: 20.89 | 20.887 | Wet: 17.278

Pre-test moisture content: %

#DIV/0! | #DIV/0! | Wet: #DIV/0!

Coal Bed Range: 3.9 lbs. to 4.8 lbs. 20% to 25% of test load

For All Usable Firebox Volumes - High Fire Test Only

Nominal Required Load Density (wet basis)	10	lb/ft³				
Usable Firebox Volume	1.94	ft³				
Total Nom. Load Wt. Target	19.40	lb				
Total Load Wt. Allowable Range	18.40	to	20.40	lb		
Core Target Wt. Allowable Range	8.70	to	12.60	lb		
Remainder Load Wt. Allowable Range	6.80	to	10.70	lb		
						Mid-Point
Core Load Pc. Wt. Allowable Range	2.90	to	4.90	lb		3.90
Remainder Load Pc. Wt. Allowable Range	1.90	to	10.70	lb		6.30
	Pc. #					
Core Load Piece Wt. Actual	1	3.76	**3.5**	In Range		
	2	3.60	**3.5**	In Range		
	3	3.62	**3.5**	In Range		
Core Load Total. Wt. Actual		10.99		In Range		
	Pc. #					
Remainder Load Piece Wt.	1	5.07	**5.2**	In Range		
(1 to 3 Pcs.)	2	3.32	**3.2**	In Range		
	3			NA		
Remainder Load Piece Weight Ratio - Small/Large		66%		In Range		≤ 67%
Remainder Load Tot. Wt. Act		8.39	lb	In Range		
Total Load Wt. Actual		19.38	lb	In Range		
Core % of Total Wt.		57%		In Range		45-65%
Remainder % of Total Wt.		43%		In Range		35-55%
Actual Load % of Nominal Target		100%		In Range		95-105%
Actual Fuel Load Density		10.0	lb/ft³			
Kindling and Start-up Fuel						
Maximim Kindling Wt. (20% of Tot. Load Wt.)		3.88	lb			
Actual Kindling Wt.		3.61	lb	In Range		18.6%
Maximum Start-up Fuel Wt. (30% of Tot. Load Wt.)		5.81	lb			
Actual Start-up Fuel Wt.		5.56	lb	In Range		28.7%
Allowable Residual Start-up Fuel Wt. Range	1.9	to	3.9	lb		Mid-Point
Actual Residual Start-up Fuel Wt.		2.26	lb	In Range		2.9
Total Wt. All Fuel Added (wet basis)		28.55	lb			
High Fire Test Run End Point Range	Low		High			Mid-Point
Based on Fuel Load Wt. (w/tares)	1.7	to	2.1	lb		1.9
Actual Fuel Load Ending Wt.		2.1	lb	In Range		

Fuel Piece Moisture Reading (%-dry basis)

1	2	3	Ave.		Pc. Wt. Dry Basis	
25.4	17.7	18.6	20.6	In Range	3.12 lb	1.42 kg
20.6	18.6	26.6	21.9	In Range	2.95 lb	1.34 kg
18.7	22	17.5	19.4	In Range	3.03 lb	1.38 kg
24.8	26.5	15.8	22.4	In Range	4.14 lb	1.88 kg
14.8	17.7	28	20.2	In Range	2.76 lb	1.25 kg
					0.00 lb	0.00 kg

Total Load Ave. MC (%-dry basis)	21.0	In Range	
Total Load Ave. MC % (wet basis)	17.4		
Total Test Load Weight (dry basis)			16.01 lb 7.26 kg

Kindling Moisture (%-dry basis)

10	10	10	10.0	In Range	3.28 lb 1.49 kg

Start-up Fuel Moisture Readings (%-dry basis)

17.9	20.9	19.5	19.4	In Range	4.66 lb 2.11 kg
19.2	17.9	21.1	19.4	In Range	
Total Wt. All Fuel Added (dry basis)					23.95 lb 10.86 kg
Total Wt. All Fuel Burned (dry basis)					19.6 lb 8.9 kg

Time	Flue	Room	Tunnel	DGM 3	DGM 3	Filter 3			
10.0	Temp 1	Temp 2	Dry Bulb 3	In 13	Out 14	15			
0.0	67.96453	68.17887	67.79145	67.97412	67.97412	76.64791			
10.0	366.5179	70.00208	90.59334	68.47544	68.47544	86.07358			
20.0	429.7478	72.2024	99.92276	68.51175	68.51175	84.84102			
30.0	534.0798	73.87968	114.3894	68.6447	68.6447	83.60632			
40.0	531.8939	76.76411	116.7478	68.81418	68.81418	83.27179			
50.0	668.9575	75.46734	150.3351	68.8396	68.8396	84.68448			
60.0	758.9067	74.02908	166.0584	69.02499	69.02499	86.37863			

Meter #1	Meter #2	Draft	Tunnel	CO	CO2	O2	scale	2.2648445	Meter	Meter		
21	22	23	24	% 25	% 25	% 27	Lbs 28	Corrected Scale	#1 Cu Ft	#2 Cu Ft	Draft	Calculated Tunnel
253.432		0.001016	0.097324				9.30	7.04	8.95	0.00	-0.249746	-0.22567
254.643		0.054466	0.09327				8.03	5.77	8.99		-0.236383	-0.22668
255.864		0.063468	0.092306				6.72	4.45	9.03		-0.234133	-0.22692
257.083		0.071258	0.090344				5.02	2.75	9.08		-0.232186	-0.22741
258.292		0.07197	0.088753				2.26	0.00	9.12		-0.232008	-0.22781
259.480		0.086493	0.086612				20.17	17.90	9.16		-0.228377	-0.22835
260.644		0.092968	0.084277				16.73	14.47	9.20		-0.226758	-0.22893

Intertek Testing Services

Manufacturer:	**SBI**		RESULTS		
Model:	**2.5R Series**		**Average emission rate:(gr/hr)**		**#DIV/0!**
Date:	**11-4-21**		Burn Rate (Dry kg/hr):		#VALEUR!
Run:	**1 - HIGH 1st hour**				
Project #:	**G104845527**				
Test Duration (min):	**60**				
Test Duration (high only):	**NA**				
PRESSURE FACTOR:	1.01270		BAROMETRIC PRESSURE		
				Average:	30.3
TEMPERATURE FACTORS				Start:	30.3
DGM #3:	0.99884			End:	30.3
DGM #2:	1.14783				
			DRY GAS METER VALUES		
VOLUMES SAMPLED			DGM #3	Final:	260.644
DGM #3:	7.17112			Initial:	253.432
DGM #2:	0.00000				
SAMPLE FLOW (dscfm)	0.11952		DGM #2	Final:	0.000
TOTAL TUNNEL VOLUME (scf):	19192			Initial:	0.000
SAMPLE RATIOS			TEMPERATURES (DEG. RANKIN)		
Sample Train 3:	2676.246			DGM #3:	528.612
Sample Train 2:	#DIV/0!			DGM #2:	460.000
TOTAL EMISSIONS			CALIBRATION FACTORS		
Sample Train 3 (g):	**5.352**			DGM #3:	0.9830
Sample Train 2 (g):	**#DIV/0!**			DGM #2:	0.0000
EMISSION RATES			TUNNEL FLOW RATE:		319.861
Sample Train 3 (g/hr):	**5.35**				
Sample Train 2 (g/hr):	**#DIV/0!**		PARTICULATE CATCH (mg)		
				Total Sample Train 3:	2
				Total Sample Train 2:	
				Filter and seal Sample Train 3:	1.5
MAX Allowed	7.50%			Filter and seal Sample Train 2:	
				Probe Sample Train 3:	0.5
DEVIATION:	#DIV/0!			Probe Sample Train 2:	

Ambiant	Flue	Dilution Tunne	Firebox Top	Firebox Back	Firebox Right	Firebox Left	Firebox Botton	DGM Inlet 1	DGM Outlet 1	Probe Temp 1	DGM inlet 2	DGM outlet 2	Probe Temp 2	Probe Temp 3	DGM inlet 3	Manomètre Dr	Manomètre Tu	Trans Vaccum	Trans Pressio	Trans Pressio	Trans Vacuun	Massflow 1	Massflow 2	Balance		Date	weight loss for	weight loss %
78.5248752	438.526223	137.843254	622.741818	310.346363	516.053232	496.699476	278.200919	68.4912629	68.5308702	81.1722966	68.6042459	68.6238401	80.8081089	87.294643	70.4994552	0.0623348	0.09015862	0.43709303	0.35232003	-0.16950188	-0.11447758	0.01214638	0.20568149	3.85545515	21.4307958	12:37:46			
88.5547587	622.982894	137.518446	801.826765	318.448933	496.858235	478.485653	299.012341	69.2388828	68.7791297	81.8513224	69.2209614	68.9992234	83.0284115	83.6226487	70.4142758	0.08273289	0.08977198	0.80999051	0.43221865	-0.15696698	0.22679375	3.50693902	3.50394762	23.3766316	18.3359723	12:47:46			
85.5840133	555.538115	129.487424	846.604623	313.886319	483.194423	456.330771	280.791268	69.38096	68.8587112	86.6170397	69.3255319	69.0304465	85.3781673	83.1065949	70.4404793	0.07805743	0.08971301	0.81480463	0.40661521	-0.14385303	0.28265277	3.51147285	3.50170037	21.4476732	16.4070139	12:57:46			
82.3521869	544.372815	136.276127	837.041226	299.281703	471.048227	439.523786	255.463899	69.4749386	68.95313	84.5779298	69.4132619	69.1423631	83.5371737	84.55229	70.3777941	0.07370093	0.09029952	0.8065631	0.41541462	-0.2085599	0.27193287	3.50427052	3.48933315	19.7520242	14.7113649	13:07:46	6.71943098	29.7%	
85.1082398	527.546069	125.963102	826.138738	286.285883	466.928902	431.892958	236.667567	69.5176695	69.0346357	81.9677421	69.4418251	69.1705132	82.7502475	84.2965103	70.3826011	0.07432409	0.09072412	0.80435765	0.43718038	-0.2229228	0.23670965	3.50720948	3.49123946	18.1725852	13.1319259	13:17:46	5.20404646	23.0%	
85.7537116	527.000589	132.776929	819.632669	279.019401	467.668312	426.112752	222.597879	69.7583275	69.2003294	87.9614416	69.6529068	69.3599512	87.3425448	86.9551672	70.6681406	0.07245376	0.09013637	0.81102071	0.39025399	-0.16903637	0.26606643	3.47809857	3.47452199	16.6032391	11.5625798	13:27:46	4.8444341	21.4%	
88.3491961	537.5235	126.792546	843.727278	273.744684	473.598057	421.894972	212.857132	69.8722469	69.3522039	84.038797	69.7751653	69.4701416	83.0056097	84.7356849	70.7690996	0.07506255	0.092712	0.80368643	0.34190834	-0.13797162	0.2289869	3.47067332	3.49238849	14.9556165	9.91495721	13:37:46	4.79640766	21.2%	
87.7155455	534.181335	131.694518	862.427506	260.693946	490.786582	427.209569	194.984826	70.0438819	69.5005452	82.5436422	69.9113941	69.5972228	83.4086724	4185.50855	4185.50855	0.07560236	0.0915424	0.79552603	0.26079484	-0.10624833	0.22854434	3.47993603	3.50423118	13.5718566	8.5311973	13:47:46	4.60072858	20.3%	
88.6583483	528.512124	127.902372	846.931152	259.799474	501.248079	432.945597	190.850756	70.2201692	69.6606275	82.1267811	70.0560303	69.7281305	87.1936858	4185.79798	4185.79798	0.07648791	0.09246792	0.79367218	0.14653878	-0.0978009	0.2687292	3.56008119	3.53465012	12.1375255	7.0968662	13:57:46	4.46571362	19.7%	
87.1436784	542.672131	136.479739	873.607102	258.414931	506.277989	439.505691	187.939009	70.6683234	69.9797515	83.3300787	70.4509043	70.1230666	84.6360388	4186.13017	4186.13017	0.07439501	0.09315595	0.81233365	0.14190632	-0.07271975	0.22116826	3.54857123	3.51168594	10.7722754	5.73161614	14:07:46	4.18334107	18.5%	
87.7400496	519.076206	133.568479	864.721044	259.626354	507.968304	450.485611	188.391712	70.8300326	70.2385788	83.9756345	70.6405359	70.4127004	83.0723724	4186.5332	4186.5332	0.07286974	0.09500486	0.80140968	0.16926964	-0.07308308	0.24702878	3.50114635	3.50958622	9.62583257	4.58517325	14:17:46	3.94602404	17.4%	
87.8868479	473.308876	128.238337	806.099234	260.572932	508.545719	459.353533	190.226819	71.1255224	70.5191586	83.8430822	70.9206447	70.6820114	82.2819598	4186.77359	4186.77359	0.06755981	0.09335589	0.84230264	0.19206862	-0.04517477	0.23995267	3.49542415	3.48728752	8.8668877	3.82622838	14:27:46	3.27063781	14.5%	
88.5508288	407.519193	114.911334	692.490253	258.439005	504.484425	460.868177	194.013134	71.289858	70.7443486	83.9087256	71.1378794	70.9026028	83.2479521	4187.07728	4187.07728	0.06233244	0.09429814	0.83247033	0.21552614	-0.05967392	0.2577413	3.59312928	3.57958845	8.56750919	3.52684988	14:37:46	2.20476626	9.7%	
88.3751081	368.222397	112.735696	602.592658	252.793882	491.271873	450.479995	195.994836	71.4881267	70.9239303	84.622291	71.3145123	71.0984105	85.3760108	4187.37332	4187.37332	0.05710286	0.09564337	0.84958037	0.23164893	-0.0436079	0.22335896	3.60928944	3.58740545	8.359258	3.31859869	14:47:46	1.26657456	5.6%	
88.9241075	344.189129	108.425916	548.143837	247.182072	474.991498	437.388383	197.412509	71.5657293	71.0860862	84.6675321	71.4749721	71.2842857	85.8973631	4187.56496	4187.56496	0.0547673	0.09558273	0.85362737	0.24199249	0.001956	0.22719943	3.66515584	3.65356229	8.14850304	3.10784373	14:57:47	0.71838465	3.2%	
89.6333625	326.04223	105.435208	512.073686	243.818033	457.940469	426.362604	198.059518	71.5217347	71.1145361	84.1345606	71.4605351	71.3281381	84.7532629	4187.78978	4187.78978	0.05297361	0.09705236	0.85260948	0.24206061	-0.008183 19	0.23904787	3.66181366	3.66036631	7.87990326	2.83924395	15:07:47	0.68760593	3.0%	
81.6986524	315.634692	107.802788	480.524531	235.779623	438.580208	414.220598	192.545541	71.6390424	71.2093826	84.2076834	71.5582799	71.4387955	84.7883206	4187.89742	4187.89742	0.04857742	0.0962088	0.865316	0.25674143	-0.04981858	0.27494231	3.66028599	3.64821217	7.74983028	2.70917096	15:17:47	0.60942773	2.7%	
80.4251524	304.647744	105.044413	457.290425	227.304939	420.303962	401.634152	184.358193	71.5354562	71.1907189	83.8809666	71.5496108	71.4263789	84.8681967	4187.98836	4187.98836	0.04742786	0.0977282	0.84209119	0.19550891	-0.01943508	0.23450667	3.66900615	3.64635504	7.60248908	2.56182976	15:27:47	0.54601397	2.4%	
79.7040465	294.980671	103.059262	440.616189	221.067119	405.697594	390.595526	180.31223	71.6463527	71.2458408	83.639927	71.5822428	71.4511025	84.9105299	4187.99516	4187.99516	0.04520822	0.09455662	0.84207644	0.22735709	-0.02066132	0.25633985	3.65422449	3.65203954	7.40353174	2.36287243	15:37:47	0.47637153	2.1%	
86.3843842	286.115361	94.4414817	429.602759	222.279636	396.868875	383.310256	183.196481	71.6296949	71.259575	82.4992959	71.5505972	71.4119609	83.8670538	4188.08433	4188.08433	0.04720885	0.09843881	0.83102462	0.19703035	-0.01829967	0.22679621	3.66420023	3.66098917	7.14961035	2.10895104	15:47:47	0.60021993	2.7%	
88.4416295	280.139181	93.8156789	418.918895	222.301642	389.797182	376.815211	187.296455	71.6509788	71.2692045	83.1467247	71.5906158	71.4494841	83.5452235	4188.05768	4188.05768	0.04608559	0.09595033	0.82862986	0.2175131	-0.00542415	0.24678783	3.74038525	3.73160116	6.9001146	1.85945529	15:57:47	0.70237447	3.1%	
89.0624389	274.01512	93.0733194	408.254999	221.296183	382.760814	370.25301	186.786871	71.6819936	71.2973105	86.9154666	71.6357855	71.4563549	82.4411829	4188.12862	4188.12862	0.04601103	0.0964566	0.84501212	0.19129654	0.01408215	0.25063322	3.75710271	3.75680931	6.71868774	1.67802843	16:07:47	0.684844	3.0%	
89.3962208	269.691037	92.3333935	399.389549	219.000234	376.295801	363.939719	184.986403	71.6574777	71.2911101	88.6882486	71.6558125	71.5005305	82.4921498	4188.1433	4188.1433	0.04535749	0.09608094	0.84067007	0.19468006	-0.01420085	0.27121739	3.7376266	3.74016069	6.55053371	1.5098744	16:17:47	0.59907663	2.6%	
86.1811853	266.630921	94.870615	391.181058	214.632757	369.77797	357.84676	181.568115	71.6634963	71.3037916	83.5816631	71.6027173	71.4873987	82.2484806	4188.10232	4188.10232	0.04508421	0.09633619	0.83667961	0.20489873	-0.02549815	0.26164325	3.7541277	3.74237187	6.43242636	1.39176705	16:27:47	0.46768825	2.1%	
85.9767604	264.24677	93.977553	385.048773	211.381602	364.649385	352.506775	176.90841	71.6244823	71.3126527	81.5478999	71.5549596	71.4487977	81.875918	4188.11309	4188.11309	0.04339889	0.09709184	0.83403652	0.20471706	-0.03523995	0.24575764	3.74971844	3.73578094	6.27209917	1.23143986	16:37:47	0.44658857	2.0%	
85.5837164	260.20234	93.51042	379.199222	208.843472	358.772987	347.998168	174.841748	71.6098973	71.2564288	87.6467306	71.5116483	71.3584371	83.1472694	4188.02469	4188.02469	0.04289536	0.0991634	0.8500131	0.19857451	-0.04020168	0.24850646	3.731075	3.72899003	6.1367236	1.09606429	16:47:47	0.41381011	1.8%	
84.7880723	255.904014	92.7641984	372.492694	206.371091	352.014633	343.264822	172.367478	71.5696865	71.2366135	82.3526758	71.4818437	71.3536115	83.5550405	4187.94071	4187.94071	0.04301096	0.09708761	0.84618737	0.19093321	-0.05414449	0.29432664	3.75463419	3.73773478	6.0019668	0.96130749	16:57:47	0.43045955	1.9%	
85.4589299	251.872725	91.9296473	365.682619	203.643791	345.382051	338.520516	169.65995	71.5337547	71.1861024	86.5031787	71.461731	71.3397428	84.1192031	4187.85615	4187.85615	0.04176682	0.09641656	0.84169289	0.19117165	-0.05537073	0.2661574	3.72396938	3.73696603	5.86062481	0.8199655	17:07:47	0.41147436	1.8%	
84.8000929	248.970108	91.376067	358.850366	201.146907	339.487101	333.458113	166.801386	71.4860364	71.1646088	88.6738824	71.4414892	71.3190835	84.1718924	4187.79485	4187.79485	0.04318273	0.0968452	0.84584807	0.20645423	-0.07391193	0.25792079	3.70833374	3.7294621	5.74357469	0.70291538	17:17:47	0.39314891	1.7%	
84.0431213	246.056834	90.9630045	353.39879	198.773138	333.548832	328.306483	164.843076	71.4426097	71.1157621	81.6220968	71.3747462	71.2415109	83.7307837	4187.71839	4187.71839	0.04019896	0.09562736	0.85097936	0.19289747	-0.06856416	0.29006081	3.77463319	3.73073898	5.62452894	0.58386963	17:27:47	0.37743787	1.7%	
84.2684796	242.287155	90.2510073	347.520255	196.572658	328.239471	322.990563	162.334127	71.3850823	71.0686358	80.4969132	71.317217	71.1852271	83.4882527	4187.53099	4187.53099	0.03970721	0.09566291	0.85224313	0.18108923	-0.07918022	0.25605956	3.77068453	3.7619447	5.51084723	0.47018792	17:37:47	0.34977759	1.5%	
84.0290505	238.690949	89.857689	340.975114	194.287646	322.936285	317.046122	160.102605	71.3659965	71.0249786	85.005454	71.2923015	71.1382411	83.6860944	4187.49464	4187.49464	0.03943285	0.09634685	0.86022159	0.18423431	-0.08012261	0.29294239	3.74517806	3.76457878	5.4112989	0.37063958	17:47:47	0.3322758	1.5%	
83.776137	235.538684	89.1872807	334.896439	191.824567	317.522076	311.09654	158.280317	71.2904854	70.9881829	84.815522	71.2309445	71.0914538	83.8766674	4187.33141	4187.33141	0.03831861	0.09662374	0.85825463	0.16953078	-0.08808181	0.29214578	3.75941224	3.76157098	5.30254276	0.26188345	17:57:47	0.32198617	1.4%	
83.7267885	231.934936	88.5265745	328.248892	189.373025	312.642607	305.371957	156.205966	71.249565	70.9289332	83.0800234	71.1812788	71.0721827	84.5631606	4187.23472	4187.23472	0.03927406	0.09852086	0.85447808	0.14583483	-0.0964157	0.26428913	3.77094679	3.75209518	5.20508432	0.16442501	18:07:48	0.30576291	1.4%	
81.0984023	227.38098	90.8944912	320.226251	184.776195	306.403454	299.28949	153.2629	71.1681325	70.8225008	82.5035659	71.1214965	71.0036524	85.0090869	4187.13537	4187.13537	0.036987	0.09669675	0.85591888	0.18626669	-0.10636187	0.25396475	3.76089729	3.73453356	5.13513864	0.09447933	18:17:48	0.27616026	1.2%	
79.4437979	221.815121	89.6686973	309.961657	180.429232	299.864936	292.475742	149.9803	71.0981601	70.7920812	82.4029753	71.0473583	70.9290936	84.3710116	4187.05752	4187.05752	0.03579773	0.09667492	0.85127195	0.20615903	-0.11887406	0.25521623	3.74152936	3.75879102	5.08049421	0.0398349	18:27:48	0.22204855	1.0%	
79.3357477	219.718421	89.5834978	307.151724	178.723637	297.508415	289.323304	148.260359	71.0246337	70.7210427	82.352228	70.9667508	70.8705533	84.0303626	4186.97762	4186.97762	0.03649098	0.09578257	0.86134029	0.24961107	-0.12335892	0.2636102	3.76153164	3.76068257	5.04065931	0	18:32:48	0.16442501	0.7%	

Time	Flue	Room	Tunnel	DGM 1	DGM 1	Filter 1	DGM 2	DGM 2	Filter 2	DGM 3	Filter 3	Meter #1	Meter #2	Draft	Tunnel	CO	CO2	O2	scale	1.1852042	Meter #1	Meter #2	Draft	Calculated
10.0	Temp 1	Temp 2	Dry Bulb 3	In 13	Out 14	15	In 16	Out 17	18	In 19	20	21	22	23	24	% 25	% 25	% 27	Lbs 28	Corrected Scale	Cu Ft	Cu Ft		Tunnel
0.0	438.5262	78.52488	137.8433	68.49126	68.53087	81.1723	68.60425	68.62384	80.80811			81.742	942.108	0.062335	0.090159				22.62	21.19	2.89	33.26	-0.234416	-0.22746
10.0	622.9829	88.55476	137.5184	69.23888	68.77913	81.85132	69.22096	68.99922	83.02841			82.938	943.329	0.082733	0.089772				19.52	18.34	2.93	33.30	-0.229317	-0.22756
20.0	555.5381	85.58401	129.4874	69.38096	68.85871	86.61704	69.32553	69.03045	85.37817			84.126	944.538	0.078057	0.089713				17.59	16.41	2.97	33.34	-0.230486	-0.22757
30.0	544.3728	82.35219	136.2761	69.47494	68.95313	84.57793	69.41326	69.14236	83.53717			85.321	945.747	0.073701	0.0903				15.90	14.71	3.01	33.38	-0.231575	-0.22743
40.0	527.5461	85.10824	125.9631	69.51767	69.03464	81.96774	69.44183	69.17051	82.75025			86.518	946.954	0.074324	0.090724				14.32	13.13	3.05	33.43	-0.231419	-0.22732
50.0	527.0006	85.75371	132.7769	69.75833	69.20033	87.96144	69.65291	69.35995	87.34254			87.705	948.156	0.072454	0.090136				12.75	11.56	3.10	33.47	-0.231887	-0.22747
60.0	537.5235	88.3492	126.7925	69.87225	69.3522	84.0388	69.77517	69.47014	83.00561			88.892	949.362	0.075063	0.092712				11.10	9.91	3.14	33.51	-0.231234	-0.22682
70.0	534.1813	87.71555	131.6945	70.04388	69.50055	82.54364	69.91139	69.59722	83.40867			90.090	950.574	0.075602	0.091542				9.72	8.53	3.18	33.56	-0.231099	-0.22711
80.0	528.5121	88.65835	127.9024	70.22017	69.66063	82.12678	70.05603	69.72813	87.19369			91.304	951.800	0.076488	0.092468				8.28	7.10	3.22	33.60	-0.230878	-0.22688
90.0	542.6721	87.14368	136.4797	70.66832	69.97975	83.33008	70.4509	70.12307	84.63604			92.516	953.020	0.074395	0.093156				6.92	5.73	3.27	33.64	-0.231401	-0.22671
100.0	519.0762	87.74005	133.5685	70.83003	70.23858	83.97563	70.64054	70.4127	83.07237			93.722	954.236	0.07287	0.095005				5.77	4.59	3.31	33.68	-0.231783	-0.22625
110.0	473.3089	87.88685	128.2383	71.12552	70.51916	83.84308	70.92064	70.68201	82.28196			94.916	955.446	0.06756	0.093356				5.01	3.83	3.35	33.73	-0.23311	-0.22666
120.0	407.5192	88.55083	114.9113	71.28986	70.74435	83.90873	71.13788	70.9026	83.24795			96.148	956.685	0.062332	0.094298				4.71	3.53	3.39	33.77	-0.234417	-0.22643
130.0	368.2224	88.37511	112.7357	71.48813	70.92393	84.62229	71.31451	71.09841	85.37601			97.379	957.930	0.057103	0.095643				4.50	3.32	3.44	33.81	-0.235724	-0.22609
140.0	344.1891	88.92411	108.4259	71.56573	71.08609	84.66753	71.47497	71.28429	85.89736			98.629	959.193	0.054767	0.095583				4.29	3.11	3.48	33.86	-0.236308	-0.2261
150.0	326.0422	89.63336	105.4352	71.52173	71.11454	84.13456	71.46054	71.32814	84.75326			99.878	960.458	0.052974	0.097052				4.02	2.84	3.53	33.90	-0.236757	-0.22574
160.0	315.6347	81.69865	107.8028	71.63904	71.20938	84.20768	71.55828	71.4388	84.78832			101.125	961.728	0.048577	0.096209				3.89	2.71	3.57	33.95	-0.237856	-0.22595
170.0	304.6477	80.42515	105.0444	71.53546	71.19072	83.88097	71.54961	71.42638	84.8682			102.377	962.989	0.047428	0.097728				3.75	2.56	3.61	33.99	-0.238143	-0.22557
180.0	294.9807	79.70405	103.0593	71.64635	71.24584	83.63993	71.58224	71.4511	84.91053			103.630	964.258	0.045208	0.094557				3.55	2.36	3.66	34.04	-0.238698	-0.22636
190.0	286.1154	86.38438	94.44148	71.62969	71.25958	82.4993	71.5506	71.41196	83.86705			104.878	965.528	0.047209	0.098439				3.29	2.11	3.70	34.08	-0.238198	-0.22539
200.0	280.1392	88.44163	93.81568	71.65098	71.2692	83.14672	71.59062	71.44948	83.54522			106.153	966.821	0.046086	0.09595				3.04	1.86	3.75	34.13	-0.238479	-0.22601
210.0	274.0151	89.06244	93.07332	71.68199	71.29731	86.91547	71.63579	71.45635	82.44118			107.432	968.115	0.046011	0.096457				2.86	1.68	3.79	34.17	-0.238497	-0.22589
220.0	269.691	89.39622	92.33339	71.65748	71.29111	88.68825	71.65581	71.50053	82.49215			108.708	969.416	0.045357	0.096081				2.70	1.51	3.84	34.22	-0.238661	-0.22598
230.0	266.6309	86.18119	94.87061	71.6635	71.30379	83.58166	71.60272	71.4874	82.24848			109.986	970.711	0.045084	0.096336				2.58	1.39	3.88	34.27	-0.238729	-0.22592
240.0	264.2468	85.97676	93.97755	71.62448	71.31265	81.5479	71.55496	71.4488	81.87592			111.265	972.005	0.043399	0.097092				2.42	1.23	3.93	34.31	-0.23915	-0.22573
250.0	260.2023	85.58372	93.51042	71.6099	71.25643	87.64673	71.51165	71.35844	83.14727			112.543	973.305	0.042895	0.099163				2.28	1.10	3.97	34.36	-0.239276	-0.22521
260.0	255.904	84.78807	92.7642	71.56969	71.23661	82.35268	71.48184	71.35361	83.55504			113.818	974.599	0.043011	0.097088				2.15	0.96	4.02	34.40	-0.239247	-0.22573
270.0	251.8727	85.45893	91.92965	71.53375	71.1861	86.50318	71.46173	71.33974	84.1192			115.098	975.892	0.041767	0.096417				2.01	0.82	4.06	34.45	-0.239558	-0.2259
280.0	248.9701	84.80009	91.37607	71.48604	71.16461	88.67388	71.44149	71.31908	84.17189			116.369	977.189	0.043183	0.096845				1.89	0.70	4.11	34.49	-0.239204	-0.22579
290.0	246.0568	84.04312	90.963	71.44261	71.11576	81.6221	71.37475	71.24151	83.73078			117.653	978.484	0.040199	0.095627				1.77	0.58	4.15	34.54	-0.23995	-0.22609
300.0	242.2872	84.26848	90.25101	71.38508	71.06864	80.49691	71.31722	71.18523	83.48825			118.943	979.785	0.039707	0.095663				1.66	0.47	4.20	34.59	-0.240073	-0.22608
310.0	238.6909	84.02905	89.85769	71.366	71.02498	85.00545	71.2923	71.13824	83.68609			120.222	981.089	0.039433	0.096347				1.56	0.37	4.24	34.63	-0.240142	-0.22591
320.0	235.5387	83.77614	89.18728	71.29049	70.98818	84.81552	71.23094	71.09145	83.87667			121.513	982.394	0.038319	0.096624				1.45	0.26	4.29	34.68	-0.24042	-0.22584
330.0	231.9349	83.72679	88.52657	71.24956	70.92893	83.08002	71.18128	71.07218	84.56316			122.790	983.695	0.039274	0.098521				1.35	0.16	4.33	34.72	-0.240181	-0.22537
340.0	227.381	81.0984	90.89449	71.16813	70.8225	82.5036	71.1215	71.00365	85.00909			124.078	984.996	0.036987	0.096697				1.28	0.09	4.38	34.77	-0.240753	-0.22583
350.0	221.8151	79.4438	89.6687	71.09816	70.79208	82.40298	71.04736	70.92909	84.37101			125.355	986.312	0.035798	0.096675				1.23	0.04	4.43	34.82	-0.241051	-0.22583
355.0	219.7184	79.33575	89.5835	71.02463	70.72104	82.35223	70.96675	70.87055	84.03036			126.009	986.965	0.036491	0.095783				1.19	0.00	4.45	34.84	-0.240877	-0.22605

Intertek Testing Services

Manufacturer:	**SBI**			RESULTS		
Model:	**2.5R Series**					
Date:	**11-4-21**			**Average emission rate:(gr/hr)**		**0.787**
Run:	**1 - MED**					
Project #:	**G104845527**			Burn Rate (Dry kg/hr):		1.354
Test Duration:	**355**					
(minutes)						
PRESSURE FACTOR:		1.01270	BAROMETRIC PRESSURE			
					Average:	30.3
TEMPERATURE FACTORS					Start:	30.3
	DGM #1:	0.99482			End:	30.3
	DGM #2:	0.99474				
			DRY GAS METER VALUES			
VOLUMES SAMPLED			avg sample flow rate dscfm	DGM #1	Final:	126.009
	DGM #1:	45.04279	0.1268811		Initial:	81.742
	DGM #2:	45.50427	0.12818105			
				DGM #2	Final:	986.965
TOTAL TUNNEL VOLUME (scf):		117175			Initial:	942.108
SAMPLE RATIOS			TEMPERATURES (DEG. RANKIN)			
	Sample Train 1:	2601.404			DGM #1:	530.751
	Sample Train 2:	2575.022			DGM #2:	530.790
TOTAL EMISSIONS			CALIBRATION FACTORS			
	Sample Train 1 (g):	**4.422**			DGM #1:	1.0100
	Sample Train 2 (g):	**4.893**			DGM #2:	1.0070
EMISSION RATES			TUNNEL FLOW RATE:			330.069
	Sample Train 1 (g/hr):	**0.75**				
	Sample Train 2 (g/hr):	**0.83**	PARTICULATE CATCH (mg)			
					Total Sample Train 1:	1.7
					Total Sample Train 2:	1.9
					Filter and seal Sample Train 1:	1.6
	MAX Allowed	7.50%			Filter and seal Sample Train 2:	1.7
					Probe Sample Train 1:	0.1
DEVIATION:		5.05%			Probe Sample Train 2:	0.2

	Room Temp		Bar Pressure		Relative Humidity		Air Velocity	
	Before	After	Before	After	Before	After	Before	After
	79	79	30.30	30.30	27.1	25.1	0	0

Average Dilution Tunnel Measurements						Sample Data	
Burn	Velocity	Flow Rate	Temp	Total Sample		Particulate Catch	
Time	(Ft/sec)	(dscf/min)	(R)	1	2	1	2
355	17.09	330.07	567.92	45.04	45.50	1.70	1.90

	Dilution Tunnel Dual Train Precision						
	Sample Ratios		Total Emissions (g)				
	Train 1	Train 2	Train 1	Train 2	Deviation (%)		
	2601.40	2575.02	4.42	4.89	5.05%		

Burn				Initial		Run	Average
Rate		Surface		Draft		Time	Draft
1.354		0.000		0.062		355.000	0.054

Run	Date	Burn Rate	Emission
1 - MED	2021-11-04	1.354	0.787

E&E Boiler Tunnel Traverse Worksheet

Static Pressure: **0.175**

Barometer: 30.3

	TUNNEL VELOCITY	TUNNEL TEMP	SQUARE ROOT
A CENTER	0.098	66.600	0.3130
B CENTER	0.098	66.800	0.3130
A1	0.090	66.700	0.3000
A2	0.100	66.600	0.3162
A3	0.084	66.600	0.2898
A4	0.074	66.600	0.2720
B1	0.088	66.800	0.2966
B2	0.095	66.700	0.3082
B3	0.093	66.800	0.3050
B4	0.073	66.700	0.2702
AVERAGE		66.69	0.2984

PITOT CONSTANT= 0.9533

E&E FUEL LOAD DATA SHEET

			Test Load Weight: Lower	Ideal	Upper	
Firebox Volume:	1.94	cu. ft	22.12	23.28	24.44	
Load Volume:	1.9400	cu. ft	Loading Density:	11.658	lbs./ft3	
Number of Spacers:			Load Density:	11.658	lbs./ft3	

Piece Size: Thick	x Wide	x Length	Weight lbs	Meter Moisture Content Dry Uncorrected %			
2	4	16	3.73	18.60	23.80	17.90	84.00
2	4	15.5	3.59	21.20	21.90	14.30	81.38
2	4	15.75	3.53	26.00	18.70	16.10	82.69
2	4	15.75	5.85	26.50	18.70	15.40	82.69
2	4	15.5	3.34	25.70	16.60	19.90	81.38
2	4	16	2.59	25.90	16.40	15.90	84.00
							0.00
							0.00
							0.00

Test Load Weigh 22.616 lbs. **Dry Weigh** 8.551 kg.

Average Moisture Content: %

Dry: 19.97 19.972 Wet: 16.647

Pre-test moisture content: %

#DIV/0! #DIV/0! Wet: #DIV/0!

Coal Bed Range: 4.6 lbs. to 5.6 lbs. 20% to 25% of test load

For Usable Firebox Volumes up to 3.0 ft^3 - Low and Medium Fire

Nominal Required Load Density (wet basis)	12	lb/ft^3				
Usable Firebox Volume	1.94	ft^3				
Total Nom. Load Wt. Target	23.28	lb				
Total Load Wt. Allowable Range	22.12	to	24.44	lb		
Core Target Wt. Allowable Range	10.476	to	15.13	lb		
Remainder Load Wt. Allowable Range	8.15	to	12.80	lb		
						Mid-Point
Core Load Fuel Pc. Wt. Allowable Range	3.49	to	5.82	lb		4.66
Remainder Load Pc. Wt. Allowable Range	2.33	to	6.98	lb		4.66
	Pc. #					Ordre
Core Load Piece Wt. Actual	1	3.73	**4**	In Range		
	2	3.59	**3.5**	In Range		
	3	3.53	**3.5**	In Range		
Core Load Total. Wt. Actual		10.85		In Range		
	Pc. #					
Remainder Load Piece Wt.	1	5.85	**6.5**	In Range		
(2 or 3 Pcs.)	2	3.34	**3**	In Range		
	3	2.59	**2.5**	In Range		
Remainder Load Piece Weight Ratio - Small/Large		44%		In Range		≤ 60%
Remainder Load Tot. Wt. Act		11.77	lb	In Range		
Total Load Wt. Actual		22.62	lb	In Range		
Core % of Total Wt.		48%		In Range		45-65%
Remainder % of Total Wt.		52%		In Range		35-55%
Actual Load % of Nominal Target		97%		In Range		95-105%
Actual Fuel Load Density		11.7	lb/ft^3			
Allowable Charcoal Bed Wt. Range (lb)	2.3	to	4.5			Mid-Point
Actual Charcoal Bed Wt.		3.9	lb	In Range		3.4
Actual Fuel Load Ending Wt.		1.2	lb	lb		≥ 90%
Total Wt. of Fuel Burned During Test Run lb.		21.4	lb			

Fuel Piece Moisture Reading (%-dry basis)

1	2	3	Ave.		Pc. Wt. Dry Basis			
18.6	23.8	17.9	20.1	In Range	3.11	lb	1.41	kg
21.2	21.9	14.3	19.1	In Range	3.01	lb	1.37	kg
26	18.7	16.1	20.3	In Range	2.93	lb	1.33	kg
26.5	18.7	15.4	20.2	In Range	4.87	lb	2.21	kg
25.7	16.6	19.9	20.7	In Range	2.76	lb	1.25	kg
25.9	16.4	15.9	19.4	In Range	2.16	lb	0.98	kg
Total Load Ave. MC % (dry basis)			20.0	In Range				
Total Load Ave. MC % (wet basis)			16.7					
Total Test Load Weight (dry basis)				→	18.85	lb	8.55	kg
Total Fuel Weight Burned During Test Run (dry basis)					17.7	lb	8.01	kg

Time	Flue	Room	Tunnel	DGM 3	DGM 3	Filter 3			
10.0	Temp 1	Temp 2	Dry Bulb 3	In 13	Out 14	15			
0.0	438.5262	78.52488	137.8433	70.49946	70.49946	87.29464			
10.0	622.9829	88.55476	137.5184	70.41428	70.41428	83.62265			
20.0	555.5381	85.58401	129.4874	70.44048	70.44048	83.10659			
30.0	544.3728	82.35219	136.2761	70.37779	70.37779	84.55229			
40.0	527.5461	85.10824	125.9631	70.3826	70.3826	84.29651			
50.0	527.0006	85.75371	132.7769	70.66814	70.66814	86.95517			
60.0	537.5235	88.3492	126.7925	70.7691	70.7691	84.73568			

Meter #1	Meter #2	Draft	Tunnel	CO	CO2	O2	scale	11.100161	Meter	Meter		
21	22	23	24	% 25	% 25	% 27	Lbs 28	Corrected Scale	#1 Cu Ft	#2 Cu Ft	Draft	Calculated Tunnel
260.679		0.062335	0.090159				22.62	11.52	9.20	0.00	-0.234416	-0.22746
261.895		0.082733	0.089772				19.52	8.42	9.24		-0.229317	-0.22756
263.135		0.078057	0.089713				17.59	6.49	9.29		-0.230486	-0.22757
264.390		0.073701	0.0903				15.90	4.80	9.33		-0.231575	-0.22743
265.635		0.074324	0.090724				14.32	3.22	9.38		-0.231419	-0.22732
266.881		0.072454	0.090136				12.75	1.65	9.42		-0.231887	-0.22747
268.128		0.075063	0.092712				11.10	0.00	9.46		-0.231234	-0.22682

Intertek Testing Services

Manufacturer:	**SBI**
Model:	**2.5R Series**
Date:	**11-4-21**
Run:	**1 - MED - 1st hour**
Project #:	**G104845527**
Test Duration: (minutes)	**60**

PRESSURE FACTOR:	1.01270
TEMPERATURE FACTORS	
DGM #3:	0.99527
DGM #2:	1.14783

VOLUMES SAMPLED	
DGM #3:	7.38032
DGM #2:	0.00000
SAMPLE FLOW (dscfm)	0.12301
TOTAL TUNNEL VOLUME (scf):	18942

SAMPLE RATIOS	
Sample Train 3:	2566.542
Sample Train 2:	#DIV/0!

TOTAL EMISSIONS	
Sample Train 3 (g):	**4.363**
Sample Train 2 (g):	**#DIV/0!**

EMISSION RATES	
Sample Train 3 (g/hr):	**4.36**
Sample Train 2 (g/hr):	**#DIV/0!**
MAX Allowed	7.50%
DEVIATION:	#DIV/0!

RESULTS

Average emission rate:(gr/hr)	**#DIV/0!**
Burn Rate (Dry kg/hr):	#VALEUR!

BAROMETRIC PRESSURE	
Average:	30.3
Start:	30.3
End:	30.3

DRY GAS METER VALUES

DGM #3	Final:	268.128
	Initial:	260.679
DGM #2	Final:	0.000
	Initial:	0.000

TEMPERATURES (DEG. RANKIN)	
DGM #3:	530.507
DGM #2:	460.000

CALIBRATION FACTORS	
DGM #3:	0.9830
DGM #2:	0.0000

TUNNEL FLOW RATE:	315.698

PARTICULATE CATCH (mg)

Total Sample Train 3:	1.7
Total Sample Train 2:	
Filter and seal Sample Train 3:	1.6
Filter and seal Sample Train 2:	
Probe Sample Train 3:	0.1
Probe Sample Train 2:	

Filters pre-weights

General information

Project:	G104845527
Project Engineer:	Claude Pelland
Scale ID:	SBI-206

	Date		2021-10-13		2021-10-20		2021-10-29		2021-11-01		2021-11-02		2021-11-03		2021-11-04	
	Pression barométrique		**29.60**		**29.5**		**29.7**		**29.4**		**29.6**		**29.7**		**29.9**	
Calibration Record	SBI-237	0.0998	0.0999		0.0999		0.1000		0.0998		0.0998		0.1000		0.0999	
	SBI-238	10.0001	9.9998		10.0003		10.0002		10.0001		10.0001		10.0002		10.0000	
	SBI-238	200.0000	199.9999		200.0000		200.0000		200.0000		200.0000		200.0000		200.0000	
	Start Time	Temp. [°F]	15H15	71.7	7H20	71.5	3H00	71.9	14H30	71.9	7H30	71	7H15	72.8	8H15	70.6
	End Time	RH [%]	16H00	4.7	8H00	4.9	3H45	1.4	15H00	2.1	8H05	3.8	7H55	2.3	9H00	4.2
		Filter ID	**Weight (mg)**		**Weight (mg)**		**Weight (mg)**		**Weight (mg)**		**Weight (mg)**		**Weight (mg)**		**Weight (mg)**	
RUN 1 HIGH	front	91	182.6		182.4		182.4		182.4		182.4					
	rear	92														
	front	95	184.1		184.1		184.1		184.1		184.1					
	rear	96														
	front	97	184.7		184.9		184.6		184.6		184.5					
	rear	98														
RUN 1 LOW	front	101	183.5		183.4		183.4		183.5		183.4					
	rear	102														
	front	105	183.9		183.9		183.9		183.9		183.9					
	rear	106														
	front	109	179.4		179.6		179.6		179.6		179.6					
	rear	110														
RUN 2 HIGH	front	93	184.4		184.2		184.4		184.2		184.2		184.2			
	rear	94														
	front	99	179.4		179.7		179.5		179.4		179.3		179.4			
	rear	100														
	front	103	182.1		182.1		182.2		182.2		182.0		182.0			
	rear	104														
RUN 2 LOW	front	107	180.7		180.6		180.6		180.6		180.6		180.6			
	rear	108														
	front	111	179.4		179.4		179.2		179.3		179.4		179.3			
	rear	112														
	front	113	178.4		178.3		178.1		178.2		178.2		178.3			
	rear	114														
RUN 3 HIGH	front	121	181.9		182.1		181.9		181.9		181.9		181.9		181.9	
	rear	122														
	front	83	186.9		186.9		187.1		186.9		186.9		186.9		186.9	
	rear	84														
	front	1	183.6		183.7		183.7		183.5		183.4		183.4		183.4	
	rear	2														
RUN 3 MED	front	115	178.4		178.1		178.1		178.4		178.1		178.1		178.2	
	rear	116														
	front	117	178.5		178.3		178.1		178.3		178.2		178.2		178.2	
	rear	118														
	front	119	179.6		179.5		179.5		179.4		179.4		179.4		179.4	
	rear	120														

Probes pre-weights

General information

Project:	G104845527
Project Engineer:	Claude Pelland
Scale ID:	SBI-206

	Date		2021-10-13		2021-10-20		2021-10-27		2021-10-29		2021-11-01		2021-11-02		2021-11-03		2021-11-04	
	Pression barométrique		**29.60**		**29.5**		**29.7**		**29.7**		**29.4**		**29.6**		**29.7**		**29.9**	
Calibration Record	SBI-237	0.1000	0.0999		0.0999		0.0999		0.1000		0.0998		0.0998		0.1000		0.0999	
	SBI-238	10.0001	9.9998		10.0003		10.0001		10.0002		10.0001		10.0001		10.0002		10.0000	
	SBI-238	200.0000	199.9999		200.0000		200.0000		200.0000		200.0000		200.0000		200.0000		200.0000	
	Start Time	Temp. [°F]	15H15	71.7	7H20	71.5	15H20	71	3H00	71.9	14H30	71.9	7H30	71	7H15	72.8	8H15	70.6
	End Time	RH [%]	16H00	4.7	8H00	4.9	16H00	1.6	3H45	1.4	15H00	2.1	8H05	3.8	7H55	2.3	9H00	4.2
	système	**Probe ID**	**Weight (g)**		**Weight (g)**		**Weight (g)**		**Weight (g)**		**Weight (g)**		**Weight (g)**		**Weight (g)**		**Weight (g)**	
RUN 1	H	A	1	80.1706		80.1710		80.1708		80.1706		80.1707		80.1705				
		B	2	79.7084		79.7084		79.7082		79.70.81		79.7083		79.7082				
		C	3	79.85.74		79.8576		79.8575		79.8576		79.8576		79.8575				
	L	D	7	80.6327		80.6333		80.6331		80.6329		80.6332		80.6330				
		E	30	80.6974		80.6976		80.6975		80.6975		80.6976		80.6974				
		F	34	80.5962		80.5966		80.5966		80.5964		80.5965		80.5963				
RUN 2	H	A	5	80.6142		80.6136		80.6135		80.6134		80.6136		80.6133		80.6132		
		B	10	80.1737		80.1731		80.1729		80.1723		80.1728		80.1726		80.1724		
		C	11	80.0078		80..0079		80.0075		80.007		80.0075		80.0075		80.0072		
	L	D	32	80.6032		80.6031		80.6027		80.6022		80.6026		80.6026		80.6023		
		E	59	94.3483		94.3480		94.3481		94.3476		94.3478		94.3476		94.3474		
		F	62	93.9942		93.9942		93.9941		93.9935		93.9940		93.9937		93.9937		
RUN 3	H	A	53	93.7909		93.7910		73.7905		93.7906		93.7911		93.7907		937901		93.7900
		B	54	94.0555		94.0559		94.0554		94.0555		94.0558		94.0552		94.0550		94.0548
		C	55	94.1079		94.1084		94.1084		94.1083		94.1081		94.1080		94.1072		94.1071
	M	D	22	80.2981		80.2979		80.2978		80.2971		80.2979		80.2975		80.2971		80.2971
		E	35	82.8932		82.8933		82.8932		82.8924		82.8926		82.8926		82.8923		82.8923
		F	36	80.8213		80.8215		80.8212		80.8204		80.8209		80.8213		80.8204		80.8204

Filters weights

General information

Project:	G104845527
Project Engineer:	Claude Pelland
Scale ID:	SBI-206

	Date/Pressure [kPa]		2021-11-02/29.6		2021-11-02/29.6		2021-11-05/29.9				
Calibration Record	SBI-237	0.1000	0.0998		0.0998		0.0999				
	SBI-238	10.0001	10.0001		10.0001		9.9999				
	SBI-238	200.0000	200.0005		200.0005		199.9998				
	Start Time	Temp. [°F]	7H20	71	20h45	71	7h15	70.7			
	End Time	RH [%]	7H30	3.8	20h55	3.8	8h15	4.3			

Run	Sampling train		Filter ID	Pretest Weight (mg)	Post test Weight (mg)	Post test Weight (mg)	Post test Weight (mg)	Difference
1 H	A	front	91	182.4	184.9	184.9		**2.5**
		rear	92					
	B	front	95	184.1	186.5	186.5		**2.4**
		rear	96					
	C (1 hr)	front	97	184.5	186.9	186.7		**2.2**
		rear	98					

	Date/Pressure		2021-11-02/29.6		2021-11-02/29.6		2021-11-05/29.9				
Calibration Record	SBI-237	0.1000	0.0998		0.0998		0.0999				
	SBI-238	10.0001	10.0001		10.0001		9.9999				
	SBI-238	200.0000	200.0005		200.0005		199.9998				
	Start Time	Temp. [°F]	7H20	67.8	20h45	71	7h15	70.7			
	End Time	RH [%]	7H30	3.8	20h55	3.8	8h15	4.3			

Run	Sampling train		Filter ID	Post test Weight (mg)	Post test Weight (mg)	Post test Weight (mg)	Post test Weight (mg)	Difference
1 L	D	front	101	183.4	186	186		**2.6**
		rear	102					
	E	front	105	183.9	186.5	186.5		**2.6**
		rear	106					
	F (1 hr)	front	109	179.6	181.7	181.6		**2.0**
		rear	110					

Filters weights

General information

Project:	G104845527
Project Engineer:	Claude Pelland
Scale ID:	SBI-206

	Date/Pressure		2021-11-03/29.7		2021-11-03/29.7		2021-11-05/29.9				
Calibration Record	SBI-237	0.1000	0.1000		0.1000		0.0999				
	SBI-238	10.0001	10.0002		10.0002		9.9999				
	SBI-238	200.0000	200.0000		200.0000		199.9998				
	Start Time	Temp. [°F]	7h15	72.8	20h40	72.8	7h15	70.7			
	End Time	RH [%]	7h55	2.3	21h00	2.3	8h15	4.3			

Run	**Sampling train**		**Filter ID**	**Pretest Weight (mg)**	**Post test Weight (mg)**	**Post test Weight (mg)**	**Post test Weight (mg)**	**Difference**
2 H	A	front	93	184.2	186.0	186.0		**1.8**
		rear	94					
	B	front	99	179.4	181.2	181.2		**1.8**
		rear	100					
	C (1 hr)	front	103	182.0	183.5	183.5		**1.5**
		rear	104					

	Date/Pressure		2021-11-03/29.7		2021-11-03/29.7		2021-11-05/29.9				
Calibration Record	SBI-237	0.1000	0.1000		0.1000		0.0999				
	SBI-238	10.0001	10.0002		10.0002		9.9999				
	SBI-238	200.0000	200.0000		200.0000		199.9998				
	Start Time	Temp. [°F]	9H20	72.8	20h40	72.8	7h15	70.7			
	End Time	RH [%]	9H26	2.3	21h00	2.3	8h15	4.3			

Run	**Sampling train**		**Filter ID**	**Pretest Weight (mg)**	**Post test Weight (mg)**	**Post test Weight (mg)**	**Post test Weight (mg)**	**Difference**
2 L	A	front	107	180.6	181.5	181.5		**0.9**
		rear	108					
	B	front	111	179.3	180.3	180.3		**1.0**
		rear	112					
	C (1 hr)	front	113	178.3	179.0	178.8		**0.5**
		rear	114					

Filters weights

General information

Project:	G104845527
Project Engineer:	Claude Pelland
Scale ID:	SBI-206

	Date/Pressure		2021-11-04/29.9		2021-11-04/29.9		2021-11-05/29.9		2021-11-16/29.55	
Calibration Record	SBI-237	0.1000	0.0999		0.0999		0.0999		0.1000	
	SBI-238	10.0001	10.0000		10.0000		9.9999		10.0002	
	SBI-238	200.0000	200.0000		200.0000		199.9998		200.0001	
	Start Time	Temp. [°F]	8H15	70.6	18h50	70.6	7h15	70.7	14h55	71
	End Time	RH [%]	9H00	4.2	19h05	4.2	8h15	4.3	15h15	0

Run	**Sampling train**		**Filter ID**	**Pretest Weight (mg)**	**Post test Weight (mg)**	**Post test Weight (mg)**	**Post test Weight (mg)**	**Difference**
3 H	A	front	121	181.9	183.9	183.7	183.9	**2.0**
		rear	122					
	B	front	83	186.8	188.8	188.9	188.8	**2.0**
		rear	84					
	C (1 hr)	front	1	183.4	184.8	184.9	184.9	**1.5**
		rear	2					

	Date/Pressure		2021-11-04/29.9		2021-11-04/29.9		2021-11-05/29.9		2021-11-16/29.55	
Calibration Record	SBI-237	0.1000	0.0999		0.0999		0.0999		0.1000	
	SBI-238	10.0001	10.0000		10.0000		9.9999		10.0002	
	SBI-238	200.0000	200.0000		200.0000		199.9998		20.0001	
	Start Time	Temp. [°F]	8H15	70.6	18h50	70.6	7h15	70.7	14h55	7.1
	End Time	RH [%]	9H00	4.2	19h05	4.2	8h15	4.3	15h00	0

Run	**Sampling train**		**Filter ID**	**Pretest Weight (mg)**	**Post test Weight (mg)**	**Post test Weight (mg)**	**Post test Weight (mg)**	**Difference**
3 M	D	front	115	178.2	179.9	179.8	179.8	**1.6**
		rear	116					
	E	front	117	178.2	180	180	179.9	**1.7**
		rear	118					
	F (1 hr)	front	119	179.4	180.9	180.9	181.0	**1.6**
		rear	120					

Probes weights

General information

Project:	G104845527
Project Engineer:	Claude Pelland
Scale ID:	SBI-206

	Date/Pressure		2021-11-02/29.6		2021-11-02/29.6		2021-11-03/29.7		2021-11-09/29.6	
Calibration Record	SBI-237	0.1000	0.0998		0.0998		0.1000		0.1000	
	SBI-238	10.0001	10.0001		10.0001		10.0002		10.0000	
	SBI-238	200.0000	200.0005		200.0005		20.0000		200.0001	
	Start Time	Temp. [°F]	7H30	71	20h45	71	7h15	72.8	7h20	70.3
	End Time	RH [%]	8H05	3.8	20h55	3.8	7h55	2.3	7h55	2.4

Run	**Sampling train**	**Probe ID**	**Pretest Weight (g)**	**Post test Weight (g)**	**Post test Weight (g)**	**Post test Weight (g)**	**Difference (mg)**
1 H	A	1	80.1705	80.1717	80.1708	80.1708	**0.3**
	B	2	79.7082	78.7097	79.7087	79.7085	**0.3**
	C (1 hr)	3	79.8575	79.8588	79.8575	79.8575	**0.0**

	Date/Pressure		2021-11-02/29.6		2021-11-02/29.6		2021-11-03/29.7		2021-11-09/29.6	
Calibration Record	SBI-237	0.1000	0.0998		0.0998		0.1000		0.1000	
	SBI-238	10.0001	10.0001		10.0001		10.0002		10.0000	
	SBI-238	200.0000	200.0005		200.0005		20.0000		200.0001	
	Start Time	Temp. [°F]	7H30	71	21h05	71	7h15	72.8	7h20	70.3
	End Time	RH [%]	8H05	3.8	21h15	3.8	7h55	2.3	7h55	2.4

Run	**Sampling train**	**Probe ID**	**Pretest Weight (g)**	**Post test Weight (g)**	**Post test Weight (g)**	**Post test Weight (g)**	Difference (mg)
1 L	D	7	80.6330	80.6334	80.6331	80.6332	**0.2**
	E	30	80.6974	80.6975	80.6976		**0.2**
	3F(1 hr)	34	80.5963	80.5977	80.5963	80.5964	**0.1**

Probes weights

General information

Project:	G104845527
Project Engineer:	Claude Pelland
Scale ID:	SBI-206

	Date/Pressure		2021-11-03/29.7		2021-11-03/29.7		2021-11-04/29.9		2021-11-05/29.9							
Calibration Record	SBI-237	0.1000	0.1000		0.1000		0.0999		0.0999							
	SBI-238	10.0001	10.0002		10.0002		10.0000		9.9999							
	SBI-238	200.0000	200.0000		200.0000		200.0000		199.9998							
	Start Time	Temp. [°F]	7H15	72.8	20h40	72.8	7h15	70.6	7h15	70.7						
	End Time	RH [%]	7H55	2.3	21h00	2.3	8h00	4.2	8h15	4.3						

Run	**Sampling train**	**Probe ID**	**Pretest Weight (g)**	**Post test Weight (g)**	**Post test Weight (g)**	**Post test Weight (g)**	**Post test Weight (g)**	**Post test Weight (g)**	**Difference (mg)**
2 H	A	5	80.6132	80.6149	80.6136	80.6135			**0.3**
	B	10	80.1724	80.1757	80.1729	80.1728			**0.4**
	C (1 hr)	11	80.0072	80.0089	80.0073	80.0073			**0.1**

	Date/Pressure		2021-11-03/29.7		2021-11-03/29.7		2021-11-04/29.9		2021-11-05/29.9		2021-11-16/29.55		2021-11-17/29.65			
Calibration Record	SBI-237	0.1000	0.1000		0.1000		0.0999		0.0999		0.1000		0.1000			
	SBI-238	10.0001	10.0002		10.0002		10.0000		9.9999		10.0002		10.0001			
	SBI-238	200.0000	200.0000		200.0000		200.0000		199.9998		200.0001		200.0000			
	Start Time	Temp. [°F]	7H15	72.8	20h40	72.8	7h15	70.6	7h15	70.7	14h55	71	9h15	72.3		
	End Time	RH [%]	7H55	2.3	21h00	2.3	8h00	4.2	8h15	4.3	15h15	0	9h20	0.4		

Run	**Sampling train**	**Probe ID**	**Pretest Weight (g)**	**Post test Weight (g)**	**Post test Weight (g)**	**Post test Weight (g)**	**Post test Weight (g)**	**Post test Weight (g)**	Difference (mg)
2 L	D	32	80.6023	80.6024	80.6027	80.6026			**0.3**
	E	59	94.3474	94.3448	94.3475	94.3476			**0.2**
	F (1 hr)	62	93.9937	93.9947	93.9936	93.9933	93.9937	93.9938	**0.1**

Probes weights

General information

Project:	G104845527
Project Engineer:	Claude Pelland
Scale ID:	SBI-206

	Date/Pressure		2021-11-04/29.9		2021-11-04/29.9		2021-11-05/29.9		2021-11-08/29.7						
Calibration Record	SBI-237	0.1000	0.0999		0.0999		0.0999		0.1000						
	SBI-238	10.0001	10.0000		10.0000		9.9999		10.0000						
	SBI-238	200.0000	200.0000		200.0000		199.9998		200.0001						
	Start Time	Temp. [°F]	7H15	70.6	18h55	70.6	7h15	70.7	7h20	70.3					
	End Time	RH [%]	8H00	4.2	19h15	4.2	8h15	4.3	8h20	2.4					

Run	**Sampling train**	**Probe ID**	**Pretest Weight (g)**	**Post test Weight (g)**	**Post test Weight (g)**	**Post test Weight (g)**	**Post test Weight (g)**	**Post test Weight (g)**	**Difference (mg)**
3 H	A	53	93.7900	93.7902	93.7904	93.7903			**0.3**
	B	54	94.0548	94.0555	94.0555	94.0553			**0.5**
	C (1 hr)	55	94.1071	94.1081	94.1076	94.1076			**0.5**

	Date/Pressure		2021-11-04/29.9		2021-11-04/29.9		2021-11-05/29.9		2021-11-08/29.7		2021-11-10/29.6		2021-11-15/29.3		
Calibration Record	SBI-237	0.1000	0.0999		0.0999		0.0999		0.1000		0.1001		0.1000		
	SBI-238	10.0001	10.0000		10.0000		9.9999		10.0000		10.0002		10.0000		
	SBI-238	200.0000	200.0000		200.0000		199.9998		200.0001		200.0001		200.0003		
	Start Time	Temp. [°F]	7H15	70.6	18h55	70.6	7h15	70.7	7h20	70.3	14h00	71.6	9h00	69	
	End Time	RH [%]	8H00	4.2	19h15	4.2	8h15	4.3	8h20	2.4	14h15	0.7	9h10	0.3	

Run	**Sampling train**	**Probe ID**	**Pretest Weight (g)**	**Post test Weight (g)**	**Post test Weight (g)**	**Post test Weight (g)**	**Post test Weight (g)**	**Post test Weight (g)**	**Difference (mg)**
3 M	D	22	80.2971	80.2984	80.2977	80.2967	80.2971	80.2972	**0.1**
	E	35	82.8923	82.8934	82.8928	82.8921	82.8926	82.8925	**0.2**
	F (1 hr)	36	80.8204	80.8214	80.8212	80.8203	80.8205		**0.1**

ID Certificat de Calibration
CA0003-006-030921-ACC-USI

Mettler-Toledo Inc.
Service Division
1900 Polaris Parkway
Columbus, OH 43240
1-800-METTLER

METTLER TOLEDO

Accredited by the American Association for Laboratory Accreditation (A2LA)
CALIBRATION CERT #1902.01

ISO 17025 Registered
ANSI/NCSL Z540-1 Accredited

Certificat de Calibration de Précision

Accuracy Calibration Certificate

Client

Compagnie:	SBI Fabricant De Poeles		
Adresse:	250 Rue de Copenhague		
Ville:	Saint-Augustin-De-Desmaures	**Contact:**	Gabrielle Santerre
Zip/Code Postal:	G3A 2H3		
État/Province:	Quebec		

Weighing Device

Manufacturier:	Weigh-Tronix	**Type d'Instrument:**	Weighing Instrument
Modèle:	DSL 4848-05	**# Outil:**	SBI-014 FLOOR SCALE
No. Série:	B00927386KL	**Modèle Indicateur:**	N/D
Building:	N/D	**Terminal Serial No.:**	N/D
Floor:	N/D	**Terminal Asset No.:**	N/D
Room:	N/D		

Plage	Capacité Max	Lisibilité (d)
1	500 kg	0.02 kg

Procedure

Instruction de Calibration: EURAMET cg-18 v. 4.0 (11/2015)
Instruction de travail METTLER TOLEDO: 30260953

Ce certificat de calibration contient des mesures pour les calibrations Tel que Trouvé et Tel que Laissé.

The sensitivity/span of the weighing instrument was adjusted before As Left calibration with an external weight.

The calibration was agreed with the user below the maximum capacity of the balance.

	Temperature	
Tel que Trouvé	Start: 22.0 °C	End: 22.0 °C
Tel que Laissé	Start: 22.0 °C	End: 22.0 °C

Environmental conditions have been verified to ensure the accuracy of the calibration.

This certificate is issued in accordance with the conditions of accreditation granted by A2LA, which is based on ISO/IEC 17025. A2LA has assessed the measurement capability of the laboratory and its traceability to recognized national standards.

Date calibration Tel que Trouvé:	09-03-2021	**Authorized A2LA Signatory:**	Dany Careau
Date calibration Tel que Laissé:	09-03-2021		Dany Careau
Date d'Émission:	09-03-2021		

© METTLER TOLEDO
Le document a été fourni par voie électronique.

Résultats de Mesure

Répétabilité

Charge de Test: 100 kg

	Tel que Trouvé	Tel que Laissé
1	N/D	100.00 kg
2	N/D	100.00 kg
3	N/D	100.00 kg

Écart Type	**N/D**	**0.000 kg**

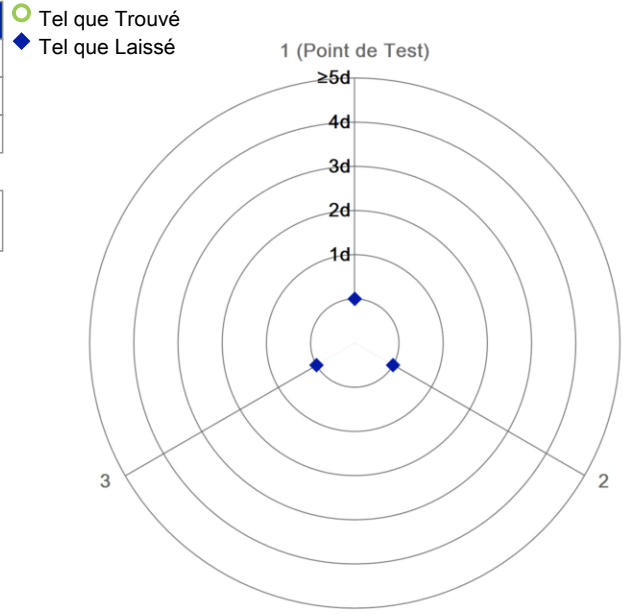

The "d" in the graph represents the readability of the range/interval in which the test was performed.

The results of this graph are based upon the absolute values of the differences from the mean value.

Excentricité

Charge de Test: 100 kg

Position	Tel que Trouvé	Tel que Laissé
1	100.06 kg	100.00 kg
2	100.08 kg	100.02 kg
3	100.04 kg	99.98 kg
4	100.04 kg	99.98 kg
5	100.10 kg	100.04 kg

Déviation Maximale	**0.04 kg**	**0.04 kg**

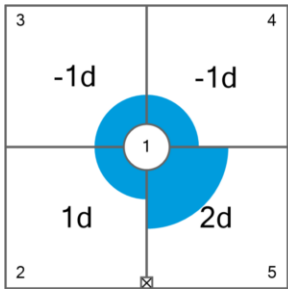

Tel que Trouvé

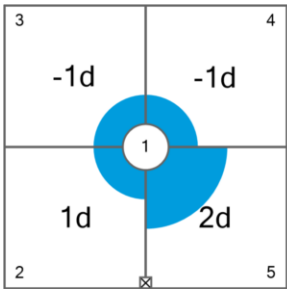

Tel que Laissé

The "d" in the graph represents the readability of the range/interval in which the test was performed.

Erreur d'indication

Tel que Trouvé

	Reference Value	Indication	Erreur d'indication	Incertitude Élargie	k
1	0 kg	0.00 kg	0.00 kg	N/D	N/D
2	40 kg	40.02 kg	0.02 kg	N/D	N/D
3	80 kg	80.04 kg	0.04 kg	N/D	N/D
4	120 kg	120.08 kg	0.08 kg	N/D	N/D
5	160 kg	160.12 kg	0.12 kg	N/D	N/D
6	200 kg	200.14 kg	0.14 kg	N/D	N/D

© METTLER TOLEDO
Le document a été fourni par voie électronique.

Tel que Laissé

	Reference Value	Indication	Erreur d'indication	Incertitude Élargie	k
1	0 kg	0.00 kg	0.00 kg	0.012 kg	2
2	40 kg	40.00 kg	0.00 kg	0.019 kg	2
3	80 kg	80.00 kg	0.00 kg	0.026 kg	2
4	120 kg	120.00 kg	0.00 kg	0.034 kg	2
5	160 kg	160.00 kg	0.00 kg	0.043 kg	2
6	200 kg	200.00 kg	0.00 kg	0.052 kg	2

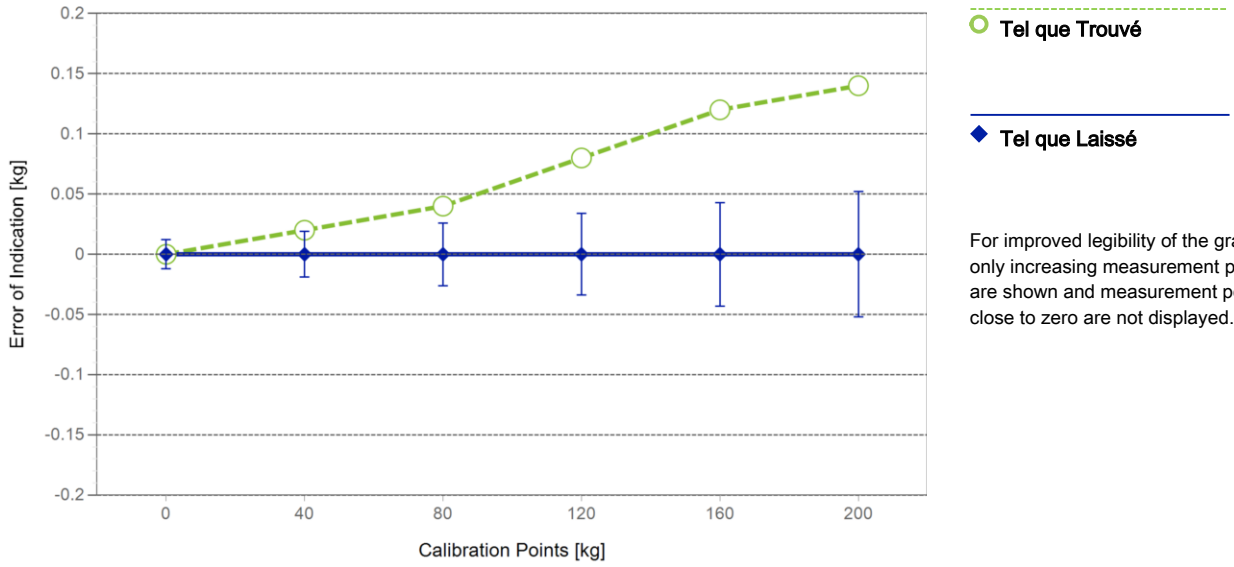

For improved legibility of the graphics only increasing measurement points are shown and measurement points close to zero are not displayed.

The uncertainty stated is the expanded uncertainty at calibration obtained by multiplying the standard combined uncertainty by the coverage factor k – which can be larger than 2 according to EURAMET cg-18. The value of the measurand lies within the assigned range of values with a probability of approximately 95%. The user is responsible for maintaining environmental conditions and the settings of the weighing instrument when it was calibrated.

Test Equipment

Tous les poids utilisés pour le contrôle métrologique sont retraçables aux étalons Nationaux et Internationaux. Les poids ont été calibrés et certifiés par un laboratoire de calibration accrédité.

Jeu de Poids 1: OIML M1

Weight Set Number:	Kit 20kg "Q"	Date d'Émission:	03-06-2020
# Certificat:	1415506	Date de Calibration Due:	03-06-2021

Remarques

N/D

End of Accredited Section

The information below and any attachments to this calibration certificate are not part of the accredited calibration.

© METTLER TOLEDO
Le document a été fourni par voie électronique.

Incertitude de Mesure du dispositif de pesage en opération

Stated is the expanded uncertainty with k=2 in use. The formula shall be used for the estimation of the uncertainty under consideration of the errors of indication. The value R represents the net load indication in the unit of measure of the device.

Coefficient de température pour l'évaluation de l'incertitude de mesure en opération: $10.0 \cdot 10^{-6}$ / K

Plage d'opération sur le site pour l'évaluation de l'incertitude de mesure en opération: 10 K

Linéarisation de l'Équation d'Incertitude

Plage			Tel que Trouvé	Tel que Laissé
	d	Max		
1	0.02 kg	200 kg	N/A	U_1 = 16 g + 0.409 g/kg · R

To optimize the stability of the linearization, besides of the zero load only increasing measurement points with a test load of 5% of the measurement range or larger are taken for the calculation of the linear equation.

Absolute and Relative Measurement Uncertainty in Use for Various Net Indications (Examples)

Indication Net	Tel que Trouvé		Tel que Laissé	
0.20 kg	N/A	N/A	0.016 kg	8.0%
2.00 kg	N/A	N/A	0.017 kg	0.84%
20.00 kg	N/A	N/A	0.024 kg	0.12%
100.00 kg	N/A	N/A	0.057 kg	0.057%
200.00 kg	N/A	N/A	0.098 kg	0.049%

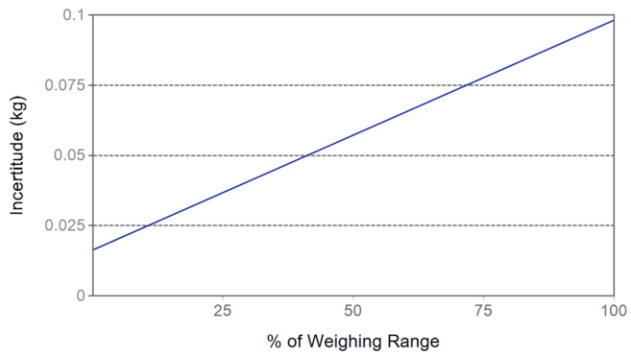

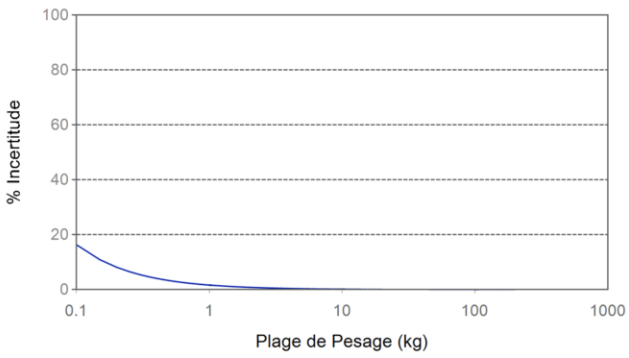

Tel que Trouvé Tel que Laissé

© METTLER TOLEDO
Le document a été fourni par voie électronique.

METTLER TOLEDO Service

Handbook 44 Tolerance Assessment (Entretien)

Assessment done without considering measurement uncertainty.
Les mesures du certificat de calibration joint ont été évaluées selon les tolérances définies par NIST HB44.

	Tel que Trouvé	Tel que Laissé
Global	✗	✓

✓ = Passed
✗ = Failed

Weighing Device

Range	Max. Capacity	Readability (d)	Verification Scale Interval (e)	Class
1	500 kg	0.02 kg	0.02 kg	III

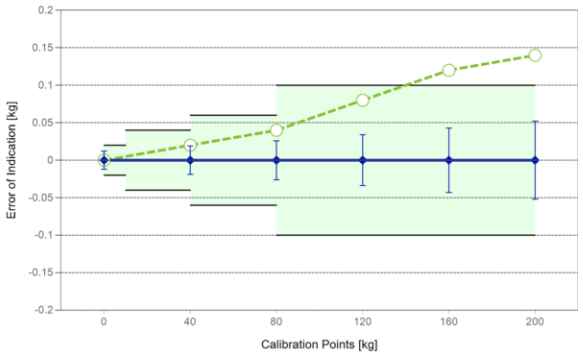

Tolerances according to NIST Handbook 44

Test Load		Tolérance
From	To	
0.00 kg	0.00 kg	0.005 kg
0.02 kg	10.00 kg	0.02 kg
10.02 kg	40.00 kg	0.04 kg
40.02 kg	80.00 kg	0.06 kg
80.02 kg	200.00 kg	0.1 kg

○ Tel que Trouvé
◆ Tel que Laissé
— Tolérance

Eccentricity and Repeatability

Test	Test Load	Tolérance	As Found		As Left	
			Max. Error / Range	Result	Max. Error / Range	Result
Excentricité (Maximum Error)	100 kg	0.10 kg	0.1 kg	✓	0.04 kg	✓
Excentricité (Plage)	100 kg	0.1 kg	0.06 kg	✓	0.06 kg	✓
Répétabilité (Maximum Error)	100 kg	0.1 kg	N/D	N/D	0.00 kg	✓
Répétabilité (Plage)	100 kg	0.10 kg	N/D	N/D	0.00 kg	✓

Max. Error: Maximum of the absolute values of the individual errors.
Range: Difference between largest and smallest measurement value.

Error of Indication

	Reference Value	Tolérance	As Found		As Left	
			Error of Indication	Result	Error of Indication	Result
1	0 kg	0.02 kg	0.00 kg	✓	0.00 kg	✓
2	40 kg	0.04 kg	0.02 kg	✓	0.00 kg	✓
3	80 kg	0.06 kg	0.04 kg	✓	0.00 kg	✓
4	120 kg	0.10 kg	0.08 kg	✓	0.00 kg	✓
5	160 kg	0.10 kg	0.12 kg	✗	0.00 kg	✓
6	200 kg	0.10 kg	0.14 kg	✗	0.00 kg	✓

© METTLER TOLEDO
Le document a été fourni par voie électronique.

ULRICH
DIVISION - TRANSCAT CANADA

Transcat Canada Inc.
9900, Côte-de-Liesse
Montréal (Québec)
H8T 1A1

Tél. (514) 631-6653
Fax (514) 631-6122
info@transcat.ca
www.transcat.ca

ACCREDITATION
ISO 17025
SCC Scope Number 220

CALIBRATION CERTIFICATE

Certificate no.:	810437	**Calibration date:**	June 08, 2021
Identification:	SBI-096	**Certificate issued:**	June 08, 2021
Description:	CALIBRATOR, OMEGA CL23A	**Interval:**	12 months
Size:	TC K/J/T	**Due date:**	June 08, 2022
Manufacturer:	OMEGA	**Procedure no.:**	METCAL-U rev. 2
Model no.:	CL23A	**Procedure date:**	2019-02-07
Serial no.:	T-256137	**Environment:**	CLAS Type 2 Laboratory
		Temperature:	23 ± 2°C
		Humidity:	35 - 55% RH
		Metrologist:	NIN

Property of: SBI
250 RUE DE COPENHAGUE
ST-AUGUSTIN-DE-DESMAURES, QC G3A 2H3

Approved by: David Llorens, Quality Manager

This calibration certificate is issued in accordance with the applicable requirements of ISO/IEC 17025 and Ulrich Metrology's quality manual QM-09 Revision 9. Measurement results provi are traceable to either the National Research Council Canada (NRC), the National Institute of Standards and Technology (NIST), a national laboratory of another country signatory to the C. Mutual Recognition Arrangement (MRA), or a calibration laboratory accredited by an accrediting body with which Canada has an equivalence agreement.

CALIBRATION STANDARDS

See notes below.

MEASUREMENT UNCERTAINTY

The uncertainties are expanded using a coverage factor K=2 for a level of confidence of approximately 95%, assuming a normal distribution.

CALIBRATION DATA

See next page for measurement results.

The Calibration Laboratory Assessment Service (CLAS) of the National Research Council of Canada (NRC) has assessed and certified specific calibration capabilities of this laboratory and traceability to the International System of Units (SI) or to standards acceptable to the CLAS program. This certificate of calibration is issued in accordance with the conditions of certification granted by CLAS and the conditions of accreditation granted by the Standards Council of Canada (SCC). Neither CLAS nor SCC guarantee the accuracy of individual calibrations by accredited laboratories.

© Copyright of this Calibration Certificate CE-03-03 is owned by Ulrich Metrology Inc. and may not be reproduced other than in full except with the prior approval of Ulrich Metrology Inc.

Ulrich Métrologie inc.
Ulrich Metrology Inc.
9900, Côte-de-Liesse
Montréal (Québec) H8T 1A1

Tél. (514) 631-6653
Fax (514) 631-6122
info@ulrich.ca
www.ulrich.ca

CALIBRATION DATA

Certificate No.: 810437

Identification: SBI-096
Description: CALIBRATOR THERMOMETER
Serial no.: T-256137
Procedure: Omega CL23A: 5520A-M

Result: PASS
Condition: FOUND-LEFT

CALIBRATION STANDARDS

Standard ID	Type	Manufacturer	Model no.	Cal. Date	Due Date
7985015	CALIBRATOR	Fluke	5520A	2021-03-03	2022-03-31

MEASURMENT RESULTS (Per MET/CAL)

PARAMETER	TEST RESULT	ACCEPTANCE LIMITS LOW	HIGH	UNITS	Exp Uncert	Condition
Temperature measurements are performed by electrical simulation.						
DISPLAY CALIBRATION						
Did all segments of the display illuminate?						
Result of Operator Evaluation						Pass
THERMOMETER CALIBRATION						
K Type Thermocouple						
-200.0 °F	-200.6	-201.0	-199.0	°F	6.0e-001°F	Pass
-60.0 °F	-60.3	-61.0	-59.0	°F	3.3e-001°F	Pass
-40.0 °F	-40.3	-40.5	-39.5	°F	3.3e-001°F	Pass
32.0 °F	31.6	31.5	32.5	°F	2.9e-001°F	Pass
300.0 °F	299.7	299.5	300.5	°F	4.7e-001°F	Pass
572.0 °F	571.6	571.5	572.5	°F	4.7e-001°F	Pass
1240.0 °F	1239.6	1239.5	1240.5	°F	4.7e-001°F	Pass
1260.0 °F	1259.6	1259.5	1260.5	°F	4.7e-001°F	Pass
2500.0 °F	2499.6	2499.0	2501.0	°F	7.2e-001°F	Pass
J Type Thermocouple						
-200.0 °F	-200.9	-201.0	-199.0	°F	4.9e-001°F	Pass
-60.0 °F	-60.4	-61.0	-59.0	°F	2.9e-001°F	Pass
-40.0 °F	-40.4	-40.5	-39.5	°F	2.9e-001°F	Pass
32.0 °F	31.6	31.5	32.5	°F	2.6e-001°F	Pass
572.0 °F	571.7	571.5	572.5	°F	3.1e-001°F	Pass
300.0 °F	299.6	299.5	300.5	°F	2.6e-001°F	Pass
1240.0 °F	1239.6	1239.5	1240.5	°F	3.1e-001°F	Pass
1260.0 °F	1259.6	1259.5	1260.5	°F	3.1e-001°F	Pass
1400.0 °F	1399.6	1399.4	1400.6	°F	3.1e-001°F	Pass
T Type Thermocouple						
-200.0 °F	-200.1	-201.0	-199.0	°F	4.4e-001°F	Pass
-60.0 °F	-59.8	-61.0	-59.0	°F	4.4e-001°F	Pass
-40.0 °F	-39.9	-40.5	-39.5	°F	4.4e-001°F	Pass
32.0 °F	32.0	31.5	32.5	°F	2.9e-001°F	Pass
300.0 °F	299.9	299.5	300.5	°F	2.6e-001°F	Pass
572.0 °F	571.9	571.5	572.5	°F	2.6e-001°F	Pass
750.0 °F	749.9	749.5	750.5	°F	2.6e-001°F	Pass

Ulrich Métrologie inc.
Ulrich Metrology Inc.
9900, Côte-de-Liesse
Montréal (Québec) H8T 1A1

Tél. (514) 631-6653
Fax (514) 631-6122
info@ulrich.ca
www.ulrich.ca

PARAMETER	TEST RESULT	ACCEPTANCE LIMITS LOW	HIGH	UNITS	Exp Uncert	Condition
CALIBRATOR CALIBRATION						
K Type Thermocouple						
-200.0 °F	-199.34	-201.00	-199.00	°F	6.0e-001°F	Pass
-60.0 °F	-59.60	-61.00	-59.00	°F	3.3e-001°F	Pass
-40.0 °F	-39.59	-40.50	-39.50	°F	3.3e-001°F	Pass
32.0 °F	32.29	31.50	32.50	°F	2.9e-001°F	Pass
300.0 °F	300.18	299.50	300.50	°F	4.7e-001°F	Pass
572.0 °F	572.34	571.50	572.50	°F	4.7e-001°F	Pass
1240.0 °F	1240.30	1239.50	1240.50	°F	4.7e-001°F	Pass
1260.0 °F	1260.23	1259.50	1260.50	°F	4.7e-001°F	Pass
2500.0 °F	2500.50	2499.00	2501.00	°F	7.2e-001°F	Pass
J Type Thermocouple						
-200.0 °F	-199.68	-201.00	-199.00	°F	4.9e-001°F	Pass
-60.0 °F	-59.94	-61.00	-59.00	°F	2.9e-001°F	Pass
-40.0 °F	-39.80	-40.50	-39.50	°F	2.9e-001°F	Pass
32.0 °F	32.04	31.50	32.50	°F	2.6e-001°F	Pass
300.0 °F	300.11	299.50	300.50	°F	2.6e-001°F	Pass
572.0 °F	572.02	571.50	572.50	°F	3.1e-001°F	Pass
1240.0 °F	1240.21	1239.50	1240.50	°F	3.1e-001°F	Pass
1260.0 °F	1260.12	1259.50	1260.50	°F	3.1e-001°F	Pass
1400.0 °F	1399.96	1399.44	1400.56	°F	3.1e-001°F	Pass
T Type Thermocouple						
-200.0 °F	-199.55	-201.00	-199.00	°F	4.4e-001°F	Pass
-60.0 °F	-59.80	-61.00	-59.00	°F	4.4e-001°F	Pass
-40.0 °F	-39.68	-40.50	-39.50	°F	4.4e-001°F	Pass
32.0 °F	32.07	31.50	32.50	°F	2.9e-001°F	Pass
300.0 °F	300.04	299.50	300.50	°F	2.6e-001°F	Pass
572.0 °F	572.02	571.50	572.50	°F	2.6e-001°F	Pass
750.0 °F	750.00	749.50	750.50	°F	2.6e-001°F	Pass

End of Test Data

MICRO PRECISION CALIBRATION, INC.
22835 INDUSTRIAL PLACE
GRASS VALLEY CA 95949
530-268-1860

Certificate of Calibration

ACCREDITED ISO/IEC 17025 CALIBRATION LABORATORY AC-1969.00

Date: Dec 4, 2020

Cert No. 551220083969913

Customer:

STOVE BUILDERS INTERNATIONAL INC.

PORTES 11-12
250 DE COPENHAGUE
SAINT-AUGUSTIN-DE-DESMAURES QC G3A 2H3

		Work Order #:	SAC-70112509
		Purchase Order #:	66348
MPC Control #:	DA5990	Serial Number:	N/A
Asset ID:	SBI-104	Department:	N/A
Gage Type:	PITOT STATIC TUBE	Performed By:	BRETT SHANLEY
Manufacturer:	DWYER INSTRUMENTS INC.	Received Condition:	IN TOLERANCE
Model Number:	160S-24	Returned Condition:	IN TOLERANCE
Size:	N/A	Cal. Date:	December 03, 2020
Temp/RH:	20.0°C / 40.0%	Cal. Interval:	12 MONTHS
Location:	Calibration performed at MPC facility	Cal. Due Date:	December 03, 2021

Calibration Notes:

See attached calibration data.(1 Page)
Pitot Coefficient: 0.84

Standards Used to Calibrate Equipment

I.D.	Description.	Model	Serial	Manufacturer	Cal. Due Date	Traceability #
AW4419	MULTI-FUNCTION PRESSURE INDICATOR	DPI 145	14501283	DRUCK INC	Aug 31, 2022	551220083774826
CJ5100	WIND TUNNEL WITH CONTROLLER	JS-500	375/305	INTERACTIVE INSTRUMENTS	Oct 31, 2021	551220083300219
AE2821	ANEMOMETER	AM-4822	N272316	LANDTEK	Oct 31, 2021	551220083907679

Procedures Used in this Event

Procedure Name	Description
MPC-AIR-001 Rev. 01	Air Velocity, Temperature and Flow Meters, General, rev01, Feb-11-2020

Calibrating Technician: Brett Shanley — BRETT SHANLEY

QC Approval: mjilao — MARVIN ILAO

STATEMENTS OF PASS OR FAIL CONFORMANCE: The uncertainty of measurement has been taken into account when determining compliance with specification. All measurements and test results guard banded to ensure the probability of false-accept does not exceed 2% in compliance with ANSI/NCSL Z540.3-2006 and in case without guard banded the probability of false-accept depending on test uncertainty ratio.

THE CALIBRATION REPORT STATUS:
PASS- Term used when compliance statement is given, and the measurement result is PASS.
PASS²- Term used when compliance statement is given, and the measurement result is conditional passed or PASS².
FAIL- Term used when compliance statement is given, and the measurement result is FAIL.
FAIL²- Term used when compliance statement is given, and the measurement result is conditional failed or FAIL².
REPORT OF VALUE - Term used when reported measurement is not requiring compliance statement in report.
ADJUSTED- When adjustments are made to an instrument which changes the value of measurement from what was measured as found to new value as left.
LIMITED - When an instrument fails calibration but is still functional in a limited manner.

The expanded uncertainty of measurement is stated as the standard uncertainty of measurement multiplied by the coverage factor k=2, which for a normal distribution corresponds to a coverage probability of approximately 95%, unless otherwise stated. This calibration report complies with ISO/IEC 17025:2017 and ANSI/NCSL Z540.3. Calibration cycles and resulting due dates were submitted/approved by the customer. Any number of factors may cause an instrument to drift out of tolerance before the next scheduled calibration. Recalibration cycles should be based on frequency of use, environmental conditions and customer's established systematic accuracy. All standards are traceable to SI through the National Institute of Standards and Technology (NIST) and/or recognized national or international standards laboratories. Services rendered include proper manufacturer's service instruction and are warranted for no less than thirty (30) days. The information on this report pertains only to the instrument identified, this may not be reproduced in part or in a whole without the prior written approval of the issuing MP Calibration Laboratory.

(CERT, Rev 7)

MICRO PRECISION

Calibration Report of Dwyer Instruments 160S-24 Pitot Static Tube

MPC Control #:	DA5990	Serial Number:	NA
Asset ID:	SBI-104	Calibration Date:	December 03, 2020

Velocity Accuracy

Function Tested	Nominal	Lower Limit	As Found	As Left	Upper Limit	Result	Uncertainty (±)	TUR
Velocity	10.0 mps	9.8 mps	9.9 mps	9.9 mps	10.2 mps	PASS[Z]	0.14 mps	1.4 : 1
	20.0 mps	19.6 mps	19.8 mps	19.8 mps	20.4 mps	PASS[Z]	0.30 mps	1.3 : 1

Statements of Pass or Fail Conformance

The uncertainty of measurement has been taken into account when determining compliance with specification.
All measurements and test results guard banded to ensure the probability of false-accept does not exceed 2% in compliance with ANSI/NCSL Z540.3-2006

The status of compliance with the acceptance criteria is reported as:

PASS — Compliant with specification.

PASS[Z] — The measured value is within acceptance limits.
However, a portion of the expanded uncertainty of measurement at 95% exceeds the specified tolerance.

FAIL[Z] — The measured value is not within the acceptance limits.
However, a portion of the expanded uncertainty of measurement at 95% is within the specified tolerance.

FAIL — Not compliant with specification.

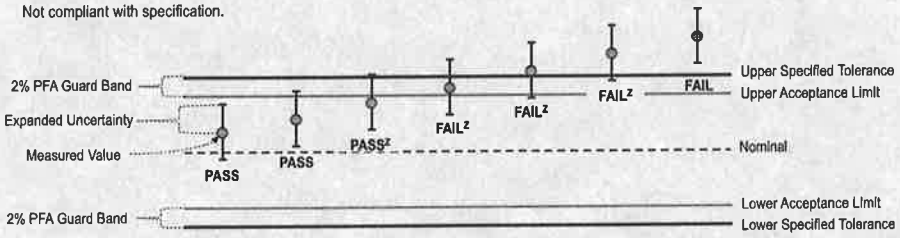

Acceptance limits for ≤ 2% probability of false accept (PFA) guard band

The expanded uncertainty of measurement is stated as the standard uncertainty of measurement multiplied by the coverage factor k = 2, which for a normal distribution corresponds to a coverage probability of approximately 95%, unless otherwise stated.

This calibration report complies with ISO/IEC 17025:2017 and ANSI/NCSL Z540.3-2006, Method 6 --- Guard Bands Based on Test Uncertainty Ratio.

- End of Calibration Report -

Confidential: Controlled Document.
Cannot be reproduced without the approval of the Quality Department.

Fabricant de poêle international inc.
Stove Builder International Inc.

CERTIFICAT DE VÉRIFICATION

VERIFICATION CERTIFICATE

No. Certificat : 20211021001

Identification : SBI-153
Description : Moisture content standard
Manufacturier : Delmhorst
No. Modèle : MCS-1
No. Série : 81808
Propriété de : SBI
250 de Copenhague
St-Augustin-de-Desmaures, QC G3A 2H3

Date de vérification : 21 octobre 2021
Prochaine vérification : 21 octobre 2022
Méthode utilisée : Cal-MCS_01
Température : 72 °F
Humidité : 41.2 %
État avant calibration : Bon état

Ce certificat de calibration est émis en accordance avec les requis applicables du standard ISO/IEC 17025 et le manuel qualité, version 2.0 de SBI.

MESURES D'INCERTITUDE

Les incertitudes signalées représentent un niveau de confiance de 95% en supposant une distribution normale, avec un facteur de couverture de K = 2.

REMARQUES

L'instrument de mesure est vérifié et nettoyé avant l'étalonnage. Les résultats de calibration de ce certificat se rapportent seulement à l'instrument calibré ci-dessus.

ÉTALON UTILISÉ POUR VÉRIFIER L'ÉQUIPEMENT

No. de l'étalon utilisé	Description	No. de certificat	Date de calibration	Date d'échéance
SBI-194	Multimètre	780975	2020-11-24	2021-11-24

Fabricant de poêle international inc.
Stove Builder International Inc.

CERTIFICAT DE VÉRIFICATION

VERIFICATION CERTIFICATE

DONNÉES DE VÉRIFICATION

Unités : MΩ

Résultat : PASS

22%			
S.D.	0.00	%	
R.M.U.	0.91	%	
O.M.U	**98.08**	**%**	
	Ave A.D.	0.30	%
Standard	Reading	A.D.	
1.10	1.10	0.00	
1.10	1.10	0.00	
1.10	1.09	0.91	

12%			
S.D.	0.00	%	
R.M.U.	0.83	%	
O.M.U	**98.24**	**%**	
	Ave A.D.	0.28	%
Standard	Reading	A.D.	
120	120	0.00	
120	120	0.00	
120	119	0.83	

VÉRIFIÉ PAR : Gabrielle Santerre

Gabrielle Santerre

FIN DU CERTIFICAT

21 octobre 2021

Certificat # 20211021001

Digital Measurement Metrology Inc.
A Trescal company
26 Automatic Road, Unit 4
Brampton, ON, L6S 5N7
Tel. (905) 790-9400 Fax. (905) 790-9266
www.dmm.ca // service@dmm.ca

ACCREDITED
CERTIFICATE #1692.01

CALIBRATION CERTIFICATE

Description:	WEIGHT	**Calibration Date:**	Oct 02, 2018 **Certificate:** 95513
Asset Number:	SBI-190	**Property of:**	SBI ST-AUGUSTIN
Serial/Model Number:	N / A	**Address:**	250, rue de Copenhague, Doors 10-12
Manufacturer:	N / A	**City/Prov/PC:**	St-Augustin-de-Desmaures QC G3A 2H3
Instrument Capacity:	5 kg	**Country:**	Canada
Procedure:	CP34G	**Method Used:**	COMPARISON
Room Humidity:	45 % **Room Temp:** 19.6 °C	**Conformance Stds:**	ISO/IEC 17025: 2005

CALIBRATION DATA

Units: kg

Range	Std/Nominal	As Found	As Left	Min	Max	Tolerance In	Tolerance Out	Comments
	5	5.0005	5.0005	4.9995	5.0005	✔		

Remarks:
Inspected, cleaned and tested using the mfgr's specs and procedures, customer's, national or international standards, or new procedure design. Measurement uncertainty is not included when any statement of compliance is made. The user must decide on acceptance for the intended use.

Received Condition:
In tolerance.

CALIBRATION STANDARD(S) USED

Traceable No.	Asset Number	Calibration Date	Date Due
95457	DMML-2356075	Oct 01, 2018	Oct 01, 2019
W-046636-25724	DMML-21701	Jan 08, 2018	Jan 08, 2020

Weights are accurate to class F tolerance.

Estimated measurement uncertainty is ± 0.2 g.

Reported uncertainties represent a 95 % confidence level assuming a normal distribution, with a coverage factor of k=2.

This calibration was performed in the lab and is traceable to the International System of Units (SI Units) through NIST or NRC. This report is covered by our accreditation.

Calibration of the instrument expires on Oct 02, 2023

The results shown above relate to the above calibrated instrument/equipment only. Copyright of this Certificate is owned by the issuing laboratory and may not be reproduced other than in full except with the prior written approval of the issuing laboratory.

CALIBRATED BY Chris Riddle — Christopher Riddle

Q.A. APPROVAL Andrés Galeano — Andres Galeano

END OF REPORT

ACCREDITATION 17025 ISO/IEC

CALIBRATION | SOLUTIONS | TO | IMPROVE | YOUR | PERFORMANCE
LA | MÉTROLOGIE | AU | SERVICE | DE | VOTRE | PERFORMANCE
www.trescal.com

ULRICH
DIVISION - TRANSCAT CANADA

Transcat Canada Inc.
9900, Côte-de-Liesse
Montréal (Québec)
H8T 1A1

Tél. (514) 631-6653
Fax (514) 631-6122
info@transcat.ca
www.transcat.ca

ACCREDITATION
ISO 17025
SCC Scope Number 220

CALIBRATION CERTIFICATE

Certificate no.:	780975	**Calibration date:**	November 24, 2020
Identification:	SBI-194	**Certificate issued:**	November 25, 2020
Description:	MULTIMETER, RADIO SHACK 22-168A	**Interval:**	12 months
Manufacturer:	RADIO SHACK	**Due date:**	November 24, 2021
Model no.:	22-168A	**Procedure no.:**	MET/CAL
Serial no.:	FC388201	**Environment:**	CLAS Type 2 Laboratory
		Temperature:	23 ± 2°C
		Humidity:	35 - 55% RH
		Metrologist:	MIC

Property of: SBI
250 RUE DE COPENHAGUE
ST-AUGUSTIN-DE-DESMAURES, QC G3A 2H3

Approved by: David Llorens, Quality Manager

This calibration certificate is issued in accordance with the applicable requirements of ISO/IEC 17025 and Ulrich Metrology's quality manual QM-09 Revision 9. Measurement results provided are traceable to either the National Research Council Canada (NRC), the National Institute of Standards and Technology (NIST), a national laboratory of another country signatory to the CIPM Mutual Recognition Arrangement (MRA), or a calibration laboratory accredited by an accrediting body with which Canada has an equivalence agreement.

CALIBRATION STANDARDS

See notes below.

MEASUREMENT UNCERTAINTY

The above listed instrument meets or exceeds all specifications as stated in the reference procedure, unless noted otherwise. For measurement results associated with the conformance to a tolerance, the uncertainty in the measurement system did not exceed 25% (4:1 test uncertainty ratio) of the acceptable tolerance for each characteristic calibrated, unless otherwise noted in the report.

CALIBRATION DATA

See next page for measurement results.

The Calibration Laboratory Assessment Service (CLAS) of the National Research Council of Canada (NRC) has assessed and certified specific calibration capabilities of this laboratory and traceability to the International System of Units (SI) or to standards acceptable to the CLAS program. This certificate of calibration is issued in accordance with the conditions of certification granted by CLAS and the conditions of accreditation granted by the Standards Council of Canada (SCC). Neither CLAS nor SCC guarantee the accuracy of individual calibrations by accredited laboratories.

© Copyright of this Calibration Certificate CE-03-03 is owned by Ulrich Metrology Inc. and may not be reproduced other than in full except with the prior approval of Ulrich Metrology Inc.

248501 P

ULRICH
DIVISION - TRANSCAT CANADA

Ulrich Métrologie inc.
Ulrich Metrology Inc.
9900, Côte-de-Liesse
Montréal (Québec) H8T 1A1

Tél. (514) 631-6653
Fax (514) 631-6122
info@ulrich.ca
www.ulrich.ca

CALIBRATION DATA

Certificate no.: 780975
Identification: SBI-194
Description: MULTIMETER
Serial no.: FC388201
Procedure: MICRONTA 22-168A: 5520A-M

Result: PASS
Condition: FOUND-LEFT

CALIBRATION STANDARDS

Identification	Description	Manufacturer	Model no.	Cal. Date	Due Date
8608002	CALIBRATOR	FLUKE	5520A	2020/07/15	2021/07/31

MEASUREMENT RESULTS (Per MET/CAL)

PARAMETER	TRUE VALUE	TEST RESULT	ACCEPTANCE LIMITS LOW	HIGH	PASS/ FAIL	TUR
DC VOLTAGE CALIBRATION						
200 mV Range						
190.0mV		189.9	187.8	192.2	PASS	
2V Range						
1.900V		1.899	1.878	1.922	PASS	
-1.900V		-1.897	-1.922	-1.878	PASS	
20V Range						
19.00V		18.98	18.78	19.22	PASS	
200V Range						
190.0V		190.1	187.8	192.2	PASS	
1000V Range						
950V		950	938	962	PASS	
AC VOLTAGE CALIBRATION						
200 mV Range						
190.0mV @ 60Hz		185.8	185.8	194.2	PASS	
2V Range						
1.900V @ 60Hz		1.858	1.858	1.942	PASS	
20V Range						
19.00V @ 60Hz		18.58	18.58	19.42	PASS	
200V Range						
190.0V @ 60Hz		185.8	185.8	194.2	PASS	
750V Range						
700V @ 60Hz		683	678	723	PASS	
FREQUENCY CALIBRATION						
1.900kHz @ 5V		1.904	1.809	1.990	PASS	
RESISTANCE CALIBRATION						
200 Ohm Range						
190.0 Ohm		190.0	186.8	193.2	PASS	
2 kOhm Range						
1.900 kOhm		1.903	1.870	1.930	PASS	
20 kOhm Range						
19.00 kOhm		18.98	18.70	19.30	PASS	

ULRICH
DIVISION - TRESCOT CANADA

Ulrich Métrologie inc.
Ulrich Metrology Inc.
9900, Côte-de-Liesse
Montréal (Québec) H8T 1A1

Tél. (514) 631-6653
Fax (514) 631-6122
info@ulrich.ca
www.ulrich.ca

PARAMETER	TRUE VALUE	TEST RESULT	ACCEPTANCE LIMITS LOW	HIGH	PASS/ FAIL	TUR
200 kOhm Range						
190.0 kOhm		190.0	187.0	193.0	PASS	
2 MOhm Range						
1.900 MOhm		1.899	1.870	1.930	PASS	
20 MOhm Range						
19.00 MOhm		19.02	18.50	19.50	PASS	
2000 MOhm Range						
1100 MOhm		1090	935	1266	PASS	
CONTINUITY CALIBRATION						
Is the beeper on when 30 Ohms resistance is applied?						
Result of Operator Evaluation					PASS	
Is the beeper off when 100 Ohms resistance is applied?						
Result of Operator Evaluation					PASS	
DC CURRENT CALIBRATION						
200 µA Range						
190.0uA		189.7	187.0	193.0	PASS	
2 mA Range						
1.900mA		1.900	1.870	1.930	PASS	
20 mA Range						
19.00mA		19.06	18.47	19.54	PASS	
200 mA Range						
190.0mA		191.6	184.7	195.3	PASS	
20 A Range						
10.00A		9.89	9.30	10.70	PASS	
AC CURRENT CALIBRATION						
200 µA Range						
190.0uA @ 60Hz		185.1	184.8	195.2	PASS	
2 mA Range						
1.900mA @ 60Hz		1.855	1.848	1.952	PASS	
20 mA Range						
19.00mA @ 60Hz		18.60	18.15	19.85	PASS	
200 mA Range						
190.0mA @ 60Hz		186.8	181.5	198.5	PASS	
20 A Range						
10.00A @ 60Hz		9.83	8.98	11.02	PASS	
CAPACITANCE CALIBRATION						
200 nF Range						
190.0nF		188.5	180.9	199.1	PASS	
20 µF Range						
19.00uF		18.46	17.30	20.70	PASS	
200 µF Range						
190.0uF		183.5	172.9	207.1	PASS	

End of Test Data

Fabricant de poêle international inc.
Stove Builder International Inc.

CERTIFICAT DE VÉRIFICATION

VERIFICATION CERTIFICATE

No. Certificat : 20211021003

Identification : SBI-197
Description : EPA sampling banc 4
Manufacturier : Home made
No. Modèle : NA
No. Série : NA
Propriété de : SBI
250 de Copenhague
St-Augustin-de-Desmaures, QC G3A 2H3

Date de vérification : 21 octobre 2021
Prochaine vérification : 21 octobre 2022
Méthode utilisée : Cal-Temp_01
Température : 72.0 °F
Humidité : 41.6 %
État avant calibration : Bon état

Ce certificat de calibration est émis en accordance avec les requis applicables du standard ISO/IEC 17025 et le manuel qualité, version 2.0 de SBI.

MESURES D'INCERTITUDE

Les incertitudes signalées représentent un niveau de confiance de 95% en supposant une distribution normale, avec un facteur de couverture de K = 2.

REMARQUES

L'instrument de mesure est vérifié et nettoyé avant l'étalonnage. Les résultats de calibration de ce certificat se rapportent seulement à l'instrument calibré ci-dessus.

ÉTALON UTILISÉ POUR VÉRIFIER L'ÉQUIPEMENT

No. de l'étalon utilisé	Description	No. de certificat	Date de calibration	Date d'échéance
SBI-096	Calibreur de température de référence	810437	2021-06-08	2022-06-08

Fabricant de poêle international inc.
Stove Builder International Inc.

CERTIFICAT DE VÉRIFICATION

VERIFICATION CERTIFICATE

DONNÉES DE VÉRIFICATION

Unités : °F

Résultat : PASS

S.D.	0.01	%	
R.M.U.	0.14	%	
O.M.U	**97.79**	**%**	
	Ave A.D.	1.10	%
Standard	Reading	A.D.	
°F	°F		
70.0	70.9	1.29	
70.0	70.6	0.86	
70.0	70.8	1.14	

S.D.	0.00	%	
R.M.U.	0.05	%	
O.M.U	**99.42**	**%**	
	Ave A.D.	0.28	%
Standard	Reading	A.D.	
°F	°F		
200.0	200.6	0.30	
200.0	200.5	0.25	
200.0	200.6	0.30	

S.D.	0.00	%	
R.M.U.	0.02	%	
O.M.U	**99.76**	**%**	
	Ave A.D.	0.12	%
Standard	Reading	A.D.	
°F	°F		
600.0	600.7	0.12	
600.0	600.6	0.10	
600.0	600.8	0.13	

S.D.	0.00	%	
R.M.U.	0.01	%	
O.M.U	**99.85**	**%**	
	Ave A.D.	0.07	%
Standard	Reading	A.D.	
°F	°F		
1000.0	1000.7	0.07	
1000.0	1000.6	0.06	
1000.0	1000.9	0.09	

S.D.	0.00	%	
R.M.U.	0.01	%	
O.M.U	**99.89**	**%**	
	Ave A.D.	0.05	%
Standard	Reading	A.D.	
°F	°F		
1400.0	1400.9	0.06	
1400.0	1400.6	0.04	
1400.0	1400.8	0.06	

VÉRIFIÉ PAR : Gabrielle Santerre

Gabrielle Santerre

FIN DU CERTIFICAT

ID Certificat de Calibration
CA0003-001-030921-ACC-USL

METTLER TOLEDO

Mettler-Toledo Inc.
Service Division
1900 Polaris Parkway
Columbus, OH 43240
1-800-METTLER

Accredited by the American Association for Laboratory Accreditation (A2LA)
CALIBRATION CERT #1788.01
ISO 17025 Accredited
ANSI/NCSL Z540-1 Accredited

Certificat de Calibration de Précision

Accuracy Calibration Certificate

Client

Compagnie:	SBI Fabricant De Poeles		
Adresse:	250 Rue de Copenhague		
Ville:	Saint-Augustin-De-Desmaures	**Contact:**	Gabrielle Santerre
Zip/Code Postal:	G3A 2H3		
État/Province:	Quebec		

Weighing Device

Manufacturier:	SARTORIUS	**Type d'Instrument:**	Weighing Instrument
Modèle:	TE214S	**# Outil:**	SBI-206 BAL. ANALYTIQUE
No. Série:	25851066	**Modèle Indicateur:**	N/D
Building:	N/D	**Terminal Serial No.:**	N/D
Floor:	N/D	**Terminal Asset No.:**	N/D
Room:	N/D		

Plage	Capacité Max	Lisibilité (d)
1	210 g	0.0001 g

Procedure

Instruction de Calibration: EURAMET cg-18 v. 4.0 (11/2015)
Instruction de travail METTLER TOLEDO: 30260953

Ce certificat de calibration contient des mesures pour la calibration Tel que Trouvé. Aucune calibration Tel que Laissé n'a été effectuée puisque l'appareil n'a pas été modifié suite à la calibration Tel que Trouvé. Par conséquent, les résultats Tel que Laissé correspondent aux résultats Tel que Trouvé.

	Temperature	
Tel que Trouvé	Start: 67.8 °F	End: 68.1 °F

Environmental conditions have been verified to ensure the accuracy of the calibration.

This certificate is issued in accordance with the conditions of accreditation granted by A2LA, which is based on ISO/IEC 17025. A2LA has assessed the measurement capability of the laboratory and its traceability to recognized national standards.

Date calibration Tel que Trouvé:	09-03-2021	**Authorized A2LA Signatory:**	Dany Careau
Date calibration Tel que Laissé:	N/D		
Date d'Émission:	09-03-2021		
Requested Next Calibration Date:	31-03-2022		

© METTLER TOLEDO
Le document a été fourni par voie électronique.

Résultats de Mesure

Répétabilité

Charge de Test: 100 g

	Tel que Trouvé	Tel que Laissé
1	99.9999 g	N/D
2	100.0000 g	N/D
3	100.0000 g	N/D
4	100.0000 g	N/D
5	99.9999 g	N/D
6	99.9999 g	N/D
7	99.9999 g	N/D
8	100.0001 g	N/D
9	100.0000 g	N/D
10	100.0001 g	N/D

Écart Type	**0.00008 g**	**N/D**

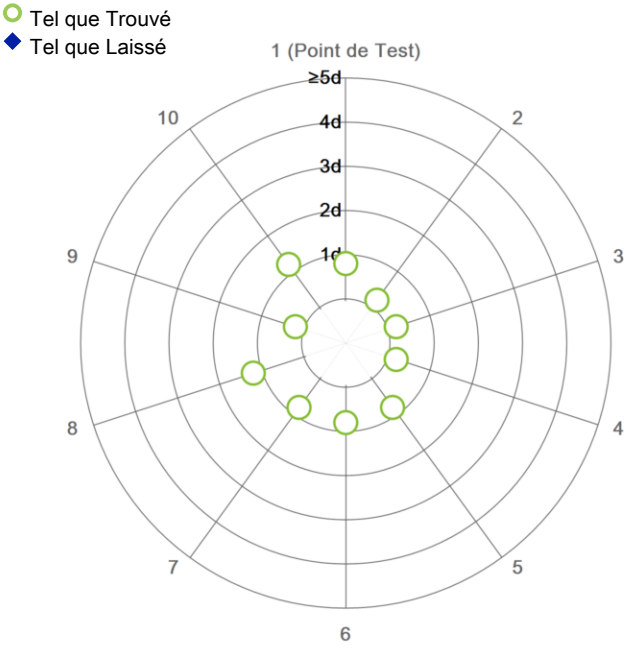

The "d" in the graph represents the readability of the range/interval in which the test was performed.

The results of this graph are based upon the absolute values of the differences from the mean value.

Excentricité

Charge de Test: 100 g

Position	Tel que Trouvé	Tel que Laissé
1	99.9999 g	N/D
2	100.0000 g	N/D
3	99.9999 g	N/D
4	100.0000 g	N/D
5	100.0000 g	N/D

Déviation Maximale	**0.0001 g**	**N/A**

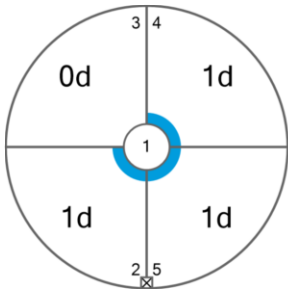

Tel que Trouvé

The "d" in the graph represents the readability of the range/interval in which the test was performed.

Erreur d'indication

Tel que Trouvé

	Reference Value	Indication	Erreur d'indication	Incertitude Élargie	k
1	0.0000 g	0.0000 g	0.0000 g	0.17 mg	2
2	50.0000 g	50.0001 g	0.0001 g	0.29 mg	2
3	99.9999 g	100.0000 g	0.0001 g	0.46 mg	2
4	150.0000 g	150.0001 g	0.0001 g	0.68 mg	2
5	200.0002 g	200.0003 g	0.0001 g	0.85 mg	2

© METTLER TOLEDO
Le document a été fourni par voie électronique.

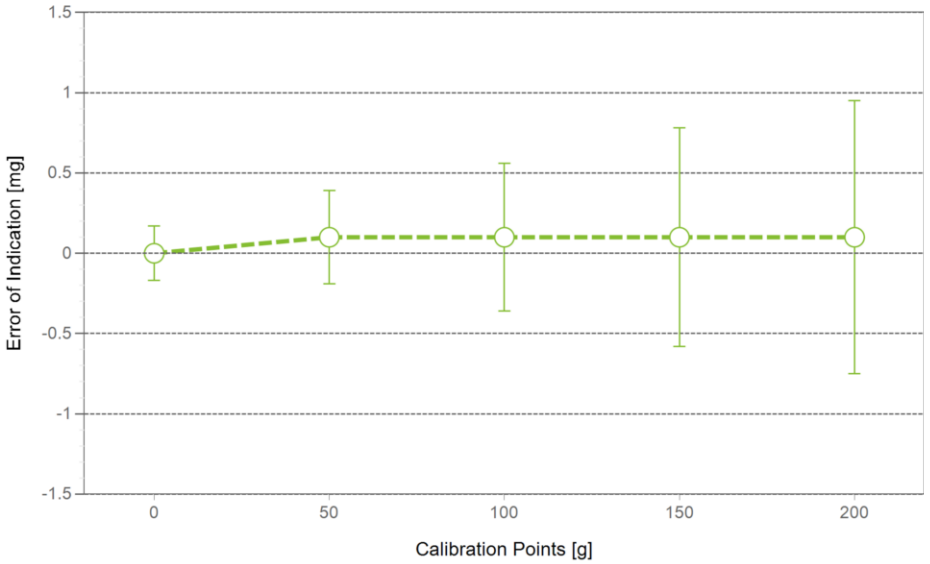

Tel que Trouvé

Tel que Laissé

For improved legibility of the graphics only increasing measurement points are shown and measurement points close to zero are not displayed.

The uncertainty stated is the expanded uncertainty at calibration obtained by multiplying the standard combined uncertainty by the coverage factor k – which can be larger than 2 according to EURAMET cg-18. The value of the measurand lies within the assigned range of values with a probability of approximately 95%. The user is responsible for maintaining environmental conditions and the settings of the weighing instrument when it was calibrated.

Test Equipment

Tous les poids utilisés pour le contrôle métrologique sont retraçables aux étalons Nationaux et Internationaux. Les poids ont été calibrés et certifiés par un laboratoire de calibration accrédité.

Jeu de Poids 1: OIML E2

Weight Set Number:	371	Date d'Émission:	17-02-2021
# Certificat:	01183992-1	Date de Calibration Due:	28-02-2022

Remarques

N/D

End of Accredited Section

The information below and any attachments to this calibration certificate are not part of the accredited calibration.

© METTLER TOLEDO
Le document a été fourni par voie électronique.

Incertitude de Mesure du dispositif de pesage en opération

Stated is the expanded uncertainty with k=2 in use. The formula shall be used for the estimation of the uncertainty under consideration of the errors of indication. The value R represents the net load indication in the unit of measure of the device.

Coefficient de température pour l'évaluation de l'incertitude de mesure en opération: $3.0 \cdot 10^{-6}$ / K

Plage d'opération sur le site pour l'évaluation de l'incertitude de mesure en opération: 5 °F

Linéarisation de l'Équation d'Incertitude

Plage			Tel que Trouvé	Tel que Laissé
	d	Max		
1	0.0001 g	210 g	U_1 = 0.18 mg + 0.00439 mg/g · R	N/A

To optimize the stability of the linearization, besides of the zero load only increasing measurement points with a test load of 5% of the measurement range or larger are taken for the calculation of the linear equation.

Absolute and Relative Measurement Uncertainty in Use for Various Net Indications (Examples)

Indication Net	Tel que Trouvé		Tel que Laissé	
0.0210 g	0.18 mg	0.86%	N/A	N/A
0.2100 g	0.18 mg	0.086%	N/A	N/A
2.1000 g	0.19 mg	0.0090%	N/A	N/A
21.0000 g	0.27 mg	0.0013%	N/A	N/A
210.0000 g	1.1 mg	0.00052%	N/A	N/A

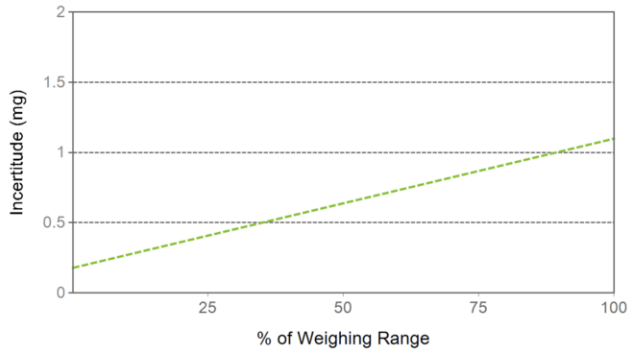

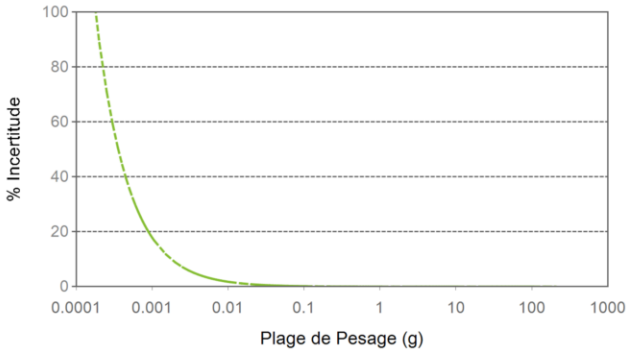

Tel que Trouvé **Tel que Laissé**

© METTLER TOLEDO
Le document a été fourni par voie électronique.

METTLER TOLEDO Service

GWP®
Certificate

No Pass/Fail statement is possible because one or more of the process requirements are not specified.

Tests Performed: ☑ ☐ ☑ No adjustments/modifications made. As Left results correspond to As Found.

Process Requirements

Weighing Tolerance: **Not Specified**

Smallest Net Weight: **Not Specified**

Facteur de Sécurité: ***Not specified, default = 2**

Safe Weighing Range

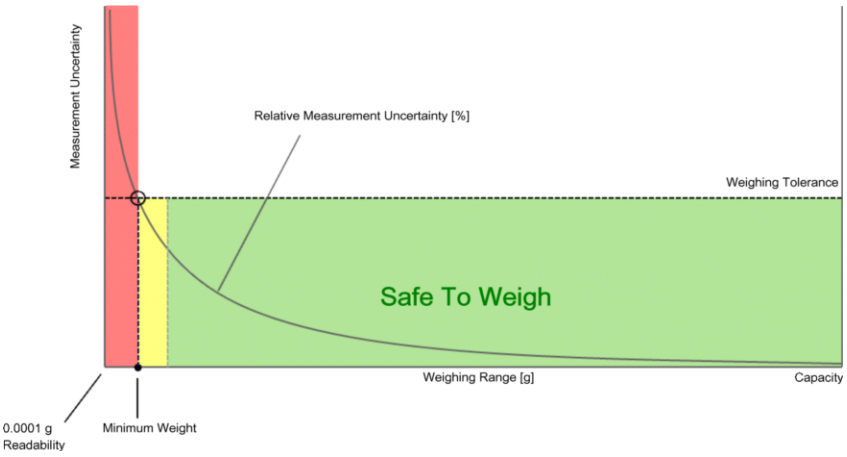

Since the weighing tolerance is not specified, only a generic behavior curve is shown.

© METTLER TOLEDO
Le document a été fourni par voie électronique.

Poids Minimum

As Found Minimum Weight Table

Poids minimum pour différentes tolérances de pesage et facteurs de sécurité					
	Facteur de Sécurité				
Tolérance	**1**	**2**	**3**	**5**	**10**
0.1%	0.17842 g	0.35842 g	0.54002 g	0.90811 g	1.85786 g
0.2%	0.08901 g	0.17842 g	0.26822 g	0.44902 g	0.90811 g
0.5%	0.03556 g	0.07118 g	0.10686 g	0.17842 g	0.35842 g
1%	0.01777 g	0.03556 g	0.05336 g	0.08901 g	0.17842 g
2%	0.00888 g	0.01777 g	0.02666 g	0.04446 g	0.08901 g
5%	0.00355 g	0.00711 g	0.01066 g	0.01777 g	0.03556 g

As Left Minimum Weight Table

Poids minimum pour différentes tolérances de pesage et facteurs de sécurité					
	Facteur de Sécurité				
Tolérance	**1**	**2**	**3**	**5**	**10**
0.1%	0.17842 g	0.35842 g	0.54002 g	0.90811 g	1.85786 g
0.2%	0.08901 g	0.17842 g	0.26822 g	0.44902 g	0.90811 g
0.5%	0.03556 g	0.07118 g	0.10686 g	0.17842 g	0.35842 g
1%	0.01777 g	0.03556 g	0.05336 g	0.08901 g	0.17842 g
2%	0.00888 g	0.01777 g	0.02666 g	0.04446 g	0.08901 g
5%	0.00355 g	0.00711 g	0.01066 g	0.01777 g	0.03556 g

À ces valeurs de poids net minimum, l'incertitude de mesure du dispositif est égale ou inférieure à 1/1 (pas de facteur de sécurité), 1/2, 1/3, 1/5 ou 1/10 de la tolérance requise. Ces valeurs sont calculées avec k=2 et basées sur la formule linéaire de l'incertitude de mesure du dispositif de pesage en opération.

The safety factor for As Found is always 1. This implies no safety factor. As Found testing looks at the behavior of the instrument from the past until test occurred. For the past, it is necessary to know that the tolerance was met, but not the safety factor. The safety factor is a proactive measure to apply for future measurements.

Notes on minimum weight values in above table:

1. If "N/A" is shown above, no appropriate value could be calculated.
2. METTLER TOLEDO is not responsible for the definition of the process requirements.

© METTLER TOLEDO
Le document a été fourni par voie électronique.

Résultats de Mesure

Results Summary

	Répétabilité	Excentricité	Erreur d'indication
As Found	N/D	N/D	N/D
As Left	N/D	N/D	N/D

✓ = Passed

✗ = Failed

⚠ = Safety Factor not met

Répétabilité

Charge de Test: 100 g

		Tel que Trouvé		Tel que Laissé	
Tolérance	Control Limit	Std. Deviation	Result	Std. Deviation	Result
0.1%	N/D	0.00008 g	N/D	0.00008 g	N/D
0.2%	N/D		N/D		N/D
0.5%	N/D		N/D		N/D
1%	N/D		N/D		N/D
2%	N/D		N/D		N/D
5%	N/D		N/D		N/D

An assessment cannot be made because the smallest net weight is not defined.

The weighing tolerance is met if the standard deviation is less than or equal to the corresponding control limit.

Excentricité

Charge de Test: 100 g

		Tel que Trouvé		Tel que Laissé	
Tolérance	Control Limit	Deviation	Result	Deviation	Result
0.1%	0.0500 g	0.0001 g	✓	0.0001 g	✓
0.2%	0.1000 g		✓		✓
0.5%	0.2500 g		✓		✓
1%	0.5000 g		✓		✓
2%	1.0000 g		✓		✓
5%	2.5000 g		✓		✓

The weighing tolerance is met if the deviation is less than or equal to the corresponding control limit.

© METTLER TOLEDO
Le document a été fourni par voie électronique.

Erreur d'indication

Tel que Trouvé

		Control limits for various weighing tolerances					
Reference Value	Error	0.1%	0.2%	0.5%	1%	2%	5%
0.0000 g	0.0000 g	N/D	N/D	N/D	N/D	N/D	N/D
50.0000 g	0.0001 g	0.0250 g	0.0500 g	0.1250 g	0.2500 g	0.5000 g	1.2500 g
99.9999 g	0.0001 g	0.0500 g	0.1000 g	0.2500 g	0.5000 g	1.0000 g	2.5000 g
150.0000 g	0.0001 g	0.0750 g	0.1500 g	0.3750 g	0.7500 g	1.5000 g	3.7500 g
200.0002 g	0.0001 g	0.1000 g	0.2000 g	0.5000 g	1.0000 g	2.0000 g	5.0000 g
Result		✓	✓	✓	✓	✓	✓

Tel que Laissé

		Control limits for various weighing tolerances					
Reference Value	Error	0.1%	0.2%	0.5%	1%	2%	5%
0.0000 g	0.0000 g	N/D	N/D	N/D	N/D	N/D	N/D
50.0000 g	0.0001 g	0.0250 g	0.0500 g	0.1250 g	0.2500 g	0.5000 g	1.2500 g
99.9999 g	0.0001 g	0.0500 g	0.1000 g	0.2500 g	0.5000 g	1.0000 g	2.5000 g
150.0000 g	0.0001 g	0.0750 g	0.1500 g	0.3750 g	0.7500 g	1.5000 g	3.7500 g
200.0002 g	0.0001 g	0.1000 g	0.2000 g	0.5000 g	1.0000 g	2.0000 g	5.0000 g
Result		✓	✓	✓	✓	✓	✓

The weighing tolerance is met if the error (of indication) for each test point is less than or equal to the corresponding control limit for that particular weighing tolerance. Results at or close to the zero point cannot be assessed.

© METTLER TOLEDO
Le document a été fourni par voie électronique.

METTLER TOLEDO Service

Handbook 44 Tolerance Assessment (Entretien)

Assessment done without considering measurement uncertainty.
Les mesures du certificat de calibration joint ont été évaluées selon les tolérances définies par NIST HB44.

	Tel que Trouvé	Tel que Laissé
Global	✓	N/D

✓ = Passed
✗ = Failed

Weighing Device

Range	Max. Capacity	Readability (d)	Verification Scale Interval (e)	Class
1	210 g	0.0001 g	0.0001 g	I

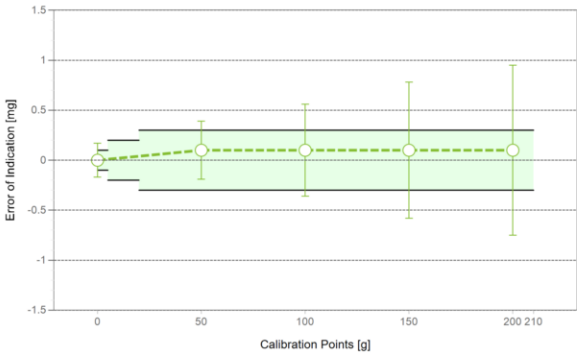

Tolerances according to NIST Handbook 44

Test Load		Tolérance
From	To	
0.0000 g	0.0000 g	0.000025 g
0.0001 g	5.0000 g	0.0001 g
5.0001 g	20.0000 g	0.0002 g
20.0001 g	210.0000 g	0.0003 g

○ Tel que Trouvé
◆ Tel que Laissé
— Tolérance

Eccentricity and Repeatability

Test	Test Load	Tolérance	As Found		As Left	
			Max. Error / Range	Result	Max. Error / Range	Result
Excentricité (Maximum Error)	100 g	0.0003 g	0.0001 g	✓	N/D	N/D
Excentricité (Plage)	100 g	0.0003 g	0.0001 g	✓	N/D	N/D
Répétabilité (Maximum Error)	100 g	0.0003 g	0.0002 g	✓	N/D	N/D
Répétabilité (Plage)	100 g	0.0003 g	0.0002 g	✓	N/D	N/D

Max. Error: Maximum of the absolute values of the individual errors.
Range: Difference between largest and smallest measurement value.

Error of Indication

	Reference Value	Tolérance	As Found		As Left	
			Error of Indication	Result	Error of Indication	Result
1	0.0000 g	0.0001 g	0.0000 g	✓	0.0000 g	✓
2	50.0000 g	0.0003 g	0.0001 g	✓	0.0001 g	✓
3	99.9999 g	0.0003 g	0.0001 g	✓	0.0001 g	✓
4	150.0000 g	0.0003 g	0.0001 g	✓	0.0001 g	✓
5	200.0002 g	0.0003 g	0.0001 g	✓	0.0001 g	✓

© METTLER TOLEDO
Le document a été fourni par voie électronique.

ULRICH
DIVISION - TRANSCAT CANADA

Transcat Canada Inc.
9900, Côte-de-Liesse
Montréal (Québec)
H8T 1A1

Tél. (514) 631-6653
Fax (514) 631-6122
info@transcat.ca
www.transcat.ca

ACCREDITATION ISO 17025 ™
SCC Scope Number 220

CALIBRATION CERTIFICATE

Certificate no.:	827062	**Calibration date:**	September 23, 2021
Identification:	SBI-212	**Certificate issued:**	September 23, 2021
Description:	THERMO-HYGROMETER, AMPROBE TH-3	**Interval:**	12 months
Manufacturer:	AMPROBE	**Due date:**	September 23, 2022
Model no.:	TH-3	**Procedure no.:**	METCAL-U rev. 2
Serial no.:	100906351	**Procedure date:**	2019-02-07
		Environment:	CLAS Type 2 Laboratory
		Temperature:	23 ± 2°C
		Humidity:	35 - 55% RH
		Metrologist:	NFS

Property of: SBI
250 RUE DE COPENHAGUE
ST-AUGUSTIN-DE-DESMAURES, QC G3A 2H3

Approved by: David Llorens, Quality Manager

This calibration certificate is issued in accordance with the applicable requirements of ISO/IEC 17025 and Ulrich Metrology's quality manual QM-09 Revision 9. Measurement results provi are traceable to either the National Research Council Canada (NRC), the National Institute of Standards and Technology (NIST), a national laboratory of another country signatory to the C Mutual Recognition Arrangement (MRA), or a calibration laboratory accredited by an accrediting body with which Canada has an equivalence agreement.

CALIBRATION STANDARDS

See notes below.

MEASUREMENT UNCERTAINTY

The uncertainties are expanded using a coverage factor K=2 for a level of confidence of approximately 95%, assuming a normal distribution.

CALIBRATION DATA

See next page for measurement results.

The Calibration Laboratory Assessment Service (CLAS) of the National Research Council of Canada (NRC) has assessed and certified specific calibration capabilities of this laboratory and traceability to the International System of Units (SI) or to standards acceptable to the CLAS program. This certificate of calibration is issued in accordance with the conditions of certification granted by CLAS and the conditions of accreditation granted by the Standards Council of Canada (SCC). Neither CLAS nor SCC guarantee the accuracy of individual calibrations by accredited laboratories.

© Copyright of this Calibration Certificate CE-03-03 is owned by Ulrich Metrology Inc. and may not be reproduced other than in full except with the prior approval of Ulrich Metrology Inc.

Ulrich Métrologie inc.
Ulrich Metrology Inc.
9900, Côte-de-Liesse
Montréal (Québec) H8T 1A1

Tél. (514) 631-6653
Fax (514) 631-6122
info@ulrich.ca
www.ulrich.ca

CALIBRATION DATA

Certificate No.: 827062

Identification: SBI-212
Description: THERMO-HYGROMETER
Serial no.: 100906351
Procedure: Amprobe TH-3: 2500ST-LT-M

Result: PASS
Condition: FOUND-LEFT

CALIBRATION STANDARDS

Standard ID	Type	Manufacturer	Model no.	Cal. Date	Due Date
1304953	HUMIDITY GENERATOR	THUNDER SCIENTIFIC	2500ST-LT	2021-01-28	2022-01-31

MEASURMENT RESULTS (Per MET/CAL)

PARAMETER	TEST RESULT	ACCEPTANCE LIMITS LOW	HIGH	UNITS	Exp Uncert	Condition
TEMPERATURE CALIBRATION						
23°C						
23.050 °C	23.50	22.25	23.85	°C	1.0e-001°C	Pass
RELATIVE HUMIDITY CALIBRATION AT 23°C						
20% RH						
20.000 %	21.00	17.00	23.00	%	6.0e-001%	Pass
50% RH						
50.000 %	49.80	47.00	53.00	%	6.0e-001%	Pass
80% RH						
79.990 %	77.10	76.99	82.99	%	6.0e-001%	Pass

End of Test Data

ULRICH
DIVISION · TRANSCAT CANADA

Transcat Canada Inc.
9900, Côte-de-Liesse
Montréal (Québec)
H8T 1A1

Tél. (514) 631-6653
Fax (514) 631-6122
info@transcat.ca
www.transcat.ca

ACCREDITATION
ISO 17025
SCC Scope Number 220

CALIBRATION CERTIFICATE

Certificate no.:	805846	**Calibration date:**	May 07, 2021
Identification:	SBI-213	**Certificate issued:**	May 07, 2021
Description:	THERMO-HYGROMETER, AMPROBE TH-3	**Interval:**	12 months
Manufacturer:	AMPROBE	**Due date:**	May 07, 2022
Model no.:	TH-3	**Procedure no.:**	MET/CAL
Serial no.:	101004044	**Environment:**	CLAS Type 2 Laboratory
		Temperature:	23 ± 2°C
		Humidity:	35 - 55% RH
		Metrologist:	NFS

Property of: SBI
250 RUE DE COPENHAGUE
ST-AUGUSTIN-DE-DESMAURES, QC G3A 2H3

Approved by: David Llorens, Quality Manager

This calibration certificate is issued in accordance with the applicable requirements of ISO/IEC 17025 and Ulrich Metrology's quality manual QM-09 Revision 9. Measurement results provi are traceable to either the National Research Council Canada (NRC), the National Institute of Standards and Technology (NIST), a national laboratory of another country signatory to the C Mutual Recognition Arrangement (MRA), or a calibration laboratory accredited by an accrediting body with which Canada has an equivalence agreement.

CALIBRATION STANDARDS

See notes below.

MEASUREMENT UNCERTAINTY

The above listed instrument meets or exceeds all specifications as stated in the reference procedure, unless noted otherwise. For measurement results associated with the conformance to a tolerance, the uncertainty in the measurement system did not exceed 25% (4:1 test uncertainty ratio) of the acceptable tolerance for each characteristic calibrated, unless otherwise noted in the report.

CALIBRATION DATA

See next page for measurement results.

Notes:

EQUIPMENT RECEIVED OUT OF SPECIFICATIONS:

High humidity is out of tolerance @80% (reading of 73.9% instead of 77% minimum).
No adjustment. No support from manufacturer.

The Calibration Laboratory Assessment Service (CLAS) of the National Research Council of Canada (NRC) has assessed and certified specific calibration capabilities of this laboratory and traceability to the International System of Units (SI) or to standards acceptable to the CLAS program. This certificate of calibration is issued in accordance with the conditions of certification granted by CLAS and the conditions of accreditation granted by the Standards Council of Canada (SCC). Neither CLAS nor SCC guarantee the accuracy of individual calibrations by accredited laboratories.

© Copyright of this Calibration Certificate CE-03-03 is owned by Ulrich Metrology Inc. and may not be reproduced other than in full except with the prior approval of Ulrich Metrology Inc.

226673 L

Ulrich Métrologie inc.
Ulrich Metrology Inc.
9900, Côte-de-Liesse
Montréal (Québec) H8T 1A1

Tél. (514) 631-6653
Fax (514) 631-6122
info@ulrich.ca
www.ulrich.ca

CALIBRATION DATA

Certificate No.: 805846

Identification: SBI-213
Description: THERMO-HYGROMETER
Serial no.: 101004044
Procedure: Amprobe TH-3: 2500ST-LT-M

Result: PASS
Condition: FOUND-LEFT

CALIBRATION STANDARDS

Standard ID	Type	Manufacturer	Model no.	Cal. Date	Due Date
1304953	HUMIDITY GENERATOR	THUNDER SCIENTIFIC	2500ST-LT	2021-01-28	2022-01-31

MEASURMENT RESULTS (Per MET/CAL)

PARAMETER	TEST RESULT	ACCEPTANCE LIMITS LOW	HIGH	UNITS	Exp Uncert	Condition
TEMPERATURE CALIBRATION						
23°C						
23.050 °C	23.40	22.25	23.85	°C	1.0e-001°C	Pass
RELATIVE HUMIDITY CALIBRATION AT 23°C						
20% RH						
20.000 %	19.00	17.00	23.00	%	6.0e-001%	Pass
50% RH						
50.010 %	47.80	47.01	53.01	%	6.0e-001%	Pass
80% RH						
80.000 %	73.80	77.00	83.00	%	6.0e-001%	Fail

End of Test Data

ID Certificat de Calibration
CA0003-007-030921-ACC-USI

METTLER TOLEDO

Mettler-Toledo Inc.
Service Division
1900 Polaris Parkway
Columbus, OH 43240
1-800-METTLER

Accredited by the American Association for Laboratory Accreditation (A2LA)
CALIBRATION CERT #1902.01

ISO 17025 Registered
ANSI/NCSL Z540-1 Accredited

Certificat de Calibration de Précision

Accuracy Calibration Certificate

Client

Compagnie:	SBI Fabricant De Poeles		
Adresse:	250 Rue de Copenhague		
Ville:	Saint-Augustin-De-Desmaures	**Contact:**	Gabrielle Santerre
Zip/Code Postal:	G3A 2H3		
État/Province:	Quebec		

Weighing Device

Manufacturier:	Ohaus	**Type d'Instrument:**	Weighing Instrument
Modèle:	FD15	**# Outil:**	SBI-222 BALANCE BENCH
No. Série:	B144397174	**Modèle Indicateur:**	N/D
Building:	N/D	**Terminal Serial No.:**	N/D
Floor:	N/D	**Terminal Asset No.:**	N/D
Room:	N/D		

Plage	Capacité Max	Lisibilité (d)
1	15000 g	1 g

Procedure

Instruction de Calibration: EURAMET cg-18 v. 4.0 (11/2015)
Instruction de travail METTLER TOLEDO: 30260953

Ce certificat de calibration contient des mesures pour les calibrations Tel que Trouvé et Tel que Laissé.

The sensitivity/span of the weighing instrument was adjusted before As Left calibration with an external weight.

	Temperature	
Tel que Trouvé	Start: 22.0 °C	End: 22.0 °C
Tel que Laissé	Start: 22.0 °C	End: 22.0 °C

Environmental conditions have been verified to ensure the accuracy of the calibration.

This certificate is issued in accordance with the conditions of accreditation granted by A2LA, which is based on ISO/IEC 17025. A2LA has assessed the measurement capability of the laboratory and its traceability to recognized national standards.

Date calibration Tel que Trouvé:	09-03-2021	**Authorized A2LA Signatory:**	Dany Careau
Date calibration Tel que Laissé:	09-03-2021		
Date d'Émission:	09-03-2021		

© METTLER TOLEDO
Le document a été fourni par voie électronique.

Résultats de Mesure

Répétabilité

Charge de Test: 10000 g

	Tel que Trouvé	Tel que Laissé
1	N/D	10000 g
2	N/D	10000 g
3	N/D	10000 g
4	N/D	10000 g
5	N/D	10000 g
6	N/D	10000 g

Écart Type	**N/D**	**0.0 g**

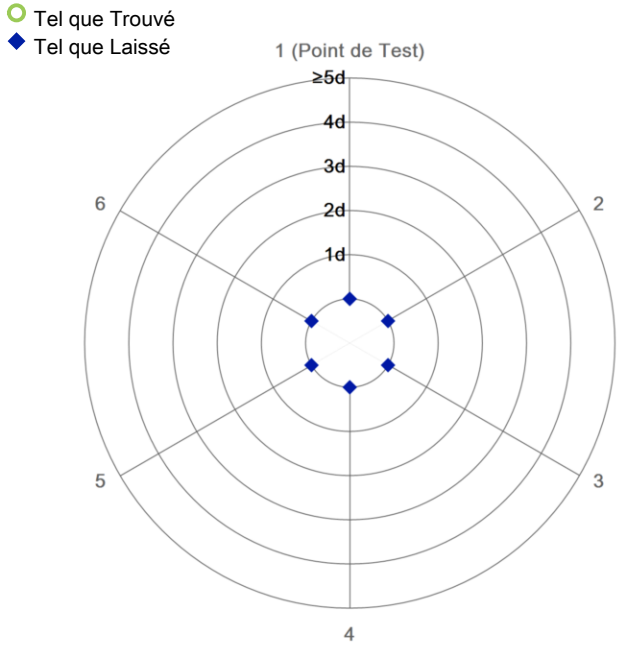

The "d" in the graph represents the readability of the range/interval in which the test was performed.

The results of this graph are based upon the absolute values of the differences from the mean value.

Excentricité

Charge de Test: 5000 g

Position	Tel que Trouvé	Tel que Laissé
1	4999 g	5000 g
2	4999 g	5000 g
3	4999 g	5000 g
4	4999 g	5000 g
5	4999 g	5000 g

Déviation Maximale	**0 g**	**0 g**

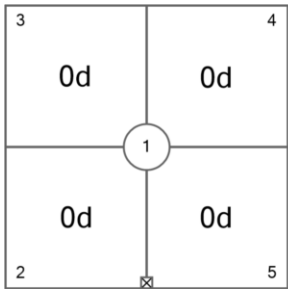

Tel que Trouvé

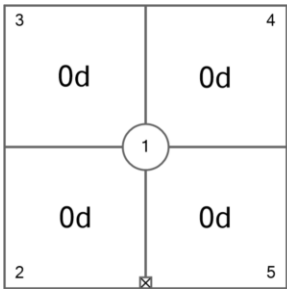

Tel que Laissé

The "d" in the graph represents the readability of the range/interval in which the test was performed.

Erreur d'indication

Tel que Trouvé

	Reference Value	Indication	Erreur d'indication	Incertitude Élargie	k
1	0 g	0 g	0 g	N/D	N/D
2	2000 g	2000 g	0 g	N/D	N/D
3	7000 g	6999 g	-1 g	N/D	N/D
4	10000 g	9998 g	-2 g	N/D	N/D
5	15000 g	14997 g	-3 g	N/D	N/D

© METTLER TOLEDO
Le document a été fourni par voie électronique.

Tel que Laissé

	Reference Value	Indication	Erreur d'indication	Incertitude Élargie	k
1	0 g	0 g	0 g	0.6 g	2
2	2000 g	2000 g	0 g	0.8 g	2
3	7000 g	7000 g	0 g	0.8 g	2
4	10000 g	10000 g	0 g	0.8 g	2
5	15000 g	15000 g	0 g	0.8 g	2

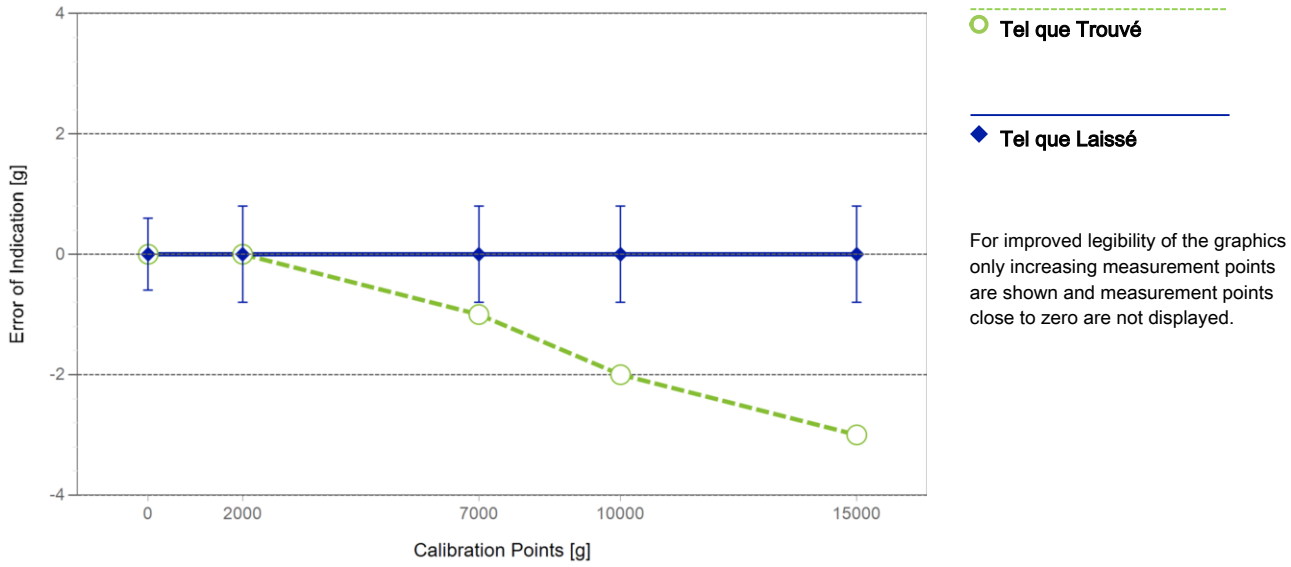

For improved legibility of the graphics only increasing measurement points are shown and measurement points close to zero are not displayed.

The uncertainty stated is the expanded uncertainty at calibration obtained by multiplying the standard combined uncertainty by the coverage factor k – which can be larger than 2 according to EURAMET cg-18. The value of the measurand lies within the assigned range of values with a probability of approximately 95%. The user is responsible for maintaining environmental conditions and the settings of the weighing instrument when it was calibrated.

Test Equipment

Tous les poids utilisés pour le contrôle métrologique sont retraçables aux étalons Nationaux et Internationaux. Les poids ont été calibrés et certifiés par un laboratoire de calibration accrédité.

Jeu de Poids 1: OIML F1

Weight Set Number:	607	Date d'Émission:	12-02-2021
# Certificat:	01182891-1	Date de Calibration Due:	28-02-2023

Remarques

N/D

End of Accredited Section

The information below and any attachments to this calibration certificate are not part of the accredited calibration.

© METTLER TOLEDO
Le document a été fourni par voie électronique.

Incertitude de Mesure du dispositif de pesage en opération

Stated is the expanded uncertainty with k=2 in use. The formula shall be used for the estimation of the uncertainty under consideration of the errors of indication. The value R represents the net load indication in the unit of measure of the device.

Coefficient de température pour l'évaluation de l'incertitude de mesure en opération: $10.0 \cdot 10^{-6}$ / K

Plage d'opération sur le site pour l'évaluation de l'incertitude de mesure en opération: 10 K

Linéarisation de l'Équation d'Incertitude

Plage			Tel que Trouvé	Tel que Laissé
	d	Max		
1	1 g	15000 g	N/A	U_1 = 816 mg + 0.0356 mg/g · R

To optimize the stability of the linearization, besides of the zero load only increasing measurement points with a test load of 5% of the measurement range or larger are taken for the calculation of the linear equation.

Absolute and Relative Measurement Uncertainty in Use for Various Net Indications (Examples)

Indication Net	Tel que Trouvé		Tel que Laissé	
15 g	N/A	N/A	0.82 g	5.4%
150 g	N/A	N/A	0.82 g	0.55%
1500 g	N/A	N/A	0.87 g	0.058%
7500 g	N/A	N/A	1.1 g	0.014%
15000 g	N/A	N/A	1.4 g	0.0090%

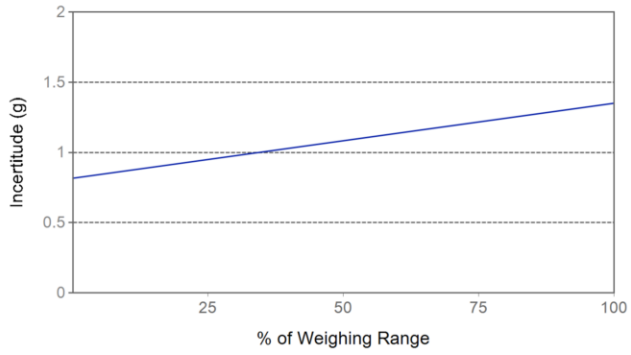

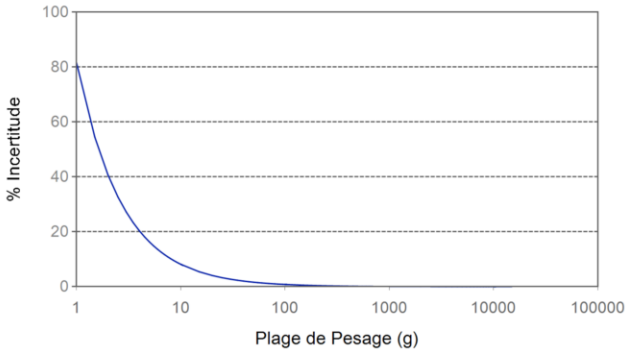

Tel que Trouvé Tel que Laissé

© METTLER TOLEDO
Le document a été fourni par voie électronique.

METTLER TOLEDO Service

Handbook 44 Tolerance Assessment (Entretien)

Assessment done without considering measurement uncertainty.
Les mesures du certificat de calibration joint ont été évaluées selon les tolérances définies par NIST HB44.

	Tel que Trouvé	Tel que Laissé
Global	✓	✓

✓ = Passed
✗ = Failed

Weighing Device

Range	Max. Capacity	Readability (d)	Verification Scale Interval (e)	Class
1	15000 g	1 g	1 g	III

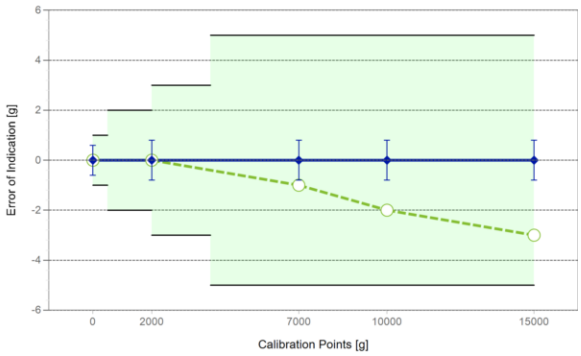

Tolerances according to NIST Handbook 44

Test Load		Tolérance
From	To	
0 g	0 g	0.25 g
1 g	500 g	1 g
501 g	2000 g	2 g
2001 g	4000 g	3 g
4001 g	15000 g	5 g

○ Tel que Trouvé
◆ Tel que Laissé
— Tolérance

Eccentricity and Repeatability

Test	Test Load	Tolérance	As Found		As Left	
			Max. Error / Range	Result	Max. Error / Range	Result
Excentricité (Maximum Error)	5000 g	5 g	1 g	✓	0 g	✓
Excentricité (Plage)	5000 g	5 g	0 g	✓	0 g	✓
Répétabilité (Maximum Error)	10000 g	5 g	N/D	N/D	0 g	✓
Répétabilité (Plage)	10000 g	5 g	N/D	N/D	0 g	✓

Max. Error: Maximum of the absolute values of the individual errors.
Range: Difference between largest and smallest measurement value.

Error of Indication

	Reference Value	Tolérance	As Found		As Left	
			Error of Indication	Result	Error of Indication	Result
1	0 g	1 g	0 g	✓	0 g	✓
2	2000 g	2 g	0 g	✓	0 g	✓
3	7000 g	5 g	-1 g	✓	0 g	✓
4	10000 g	5 g	-2 g	✓	0 g	✓
5	15000 g	5 g	-3 g	✓	0 g	✓

© METTLER TOLEDO
Le document a été fourni par voie électronique.

Certificate No: 01037944A-1

METTLER TOLEDO

METTLER-TOLEDO, LLC
201 Wolf Dr
Thorofare NJ 08086
1-800-METTLER

NVLAP CALIBRATION NVLAP LAB CODE 105013-0

ilac-MRA

Mass Calibration Certificate

Customer Information

Customer Name:	Stove Builder International, Inc.	*City:*	
Address:	250 de Copenhauge St.-Augustin-de-Desmaures	*State / Province:*	QC
Purchase Order:	220309982	*Zip / Postal Code:*	G3A 2H3

Measurement and Test Equipment Identification

Serial Number:	B316238717	*Date Received:*	03-OCT-2018
Manufacturer:	Mettler Toledo	*Condition:*	Good
Asset Number:	SBI-237	*Tolerance Class:*	OIML R111 Class E2

Environmental Conditions

Temperature: 21.51 °C *Barometric Pressure:* 770.05 mm Hg *Relative Humidity:* 50 %RH

The standards used to perform this calibration have been compared to reference mass standards that are traceable to the SI through the National Institute of Standards and Technology under Test No 684/289871-17.

The weights calibrated for this report have been calibrated in accordance with the calibration laboratory's process. The calibration performed meets the criteria as described in the current revisions of ASTM E617 and OIML R111. This calibration also meets specifications as outlined in ISO/IEC 17025, ANSI/NCSL Z540-1-1994, and applicable documents.

This certificate may not be partially reproduced, except with prior written permission of the issuing laboratory. This certificate must not be used by the customer to claim product endorsement by NIST, NVLAP, or any other agency of the U.S. government.

Calibration Date:	09-OCT-2018	*Next Calibration Due:*	09-OCT-2023
Calibration Technician:	Robotic Calibration	*Signature:*	Joseph Moran, Metrology Manager Approved Signatory 10-OCT-2018

16280500A

Certificate No: 01037944A-1

As Found Data

Nominal Value&Suffix	Serial Number	True Mass (g)	Conv. Mass (g)	Uncertainty (mg, k = 2)	Tolerance (mg)	Density (g/cm³)
100 mg	B316238717	0.0999983	0.0999983	0.0025	0.0160	8.00

16280500A

Certificate No: 01037944A-1

As Left Data

Nominal Value&Suffix	Serial Number	True Mass (g)	Conv. Mass (g)	Uncertainty (mg, k = 2)	Tolerance (mg)	Density (g/cm³)
100 mg	B316238717	0.0999983	0.0999983	0.0025	0.0160	8.00

TLER TOLEDO
tion Service

16280500A

Certificate No: 01037944A-1

Standards and Comparators Used

Nominal Value&Suffix	Serial Number	Standard Set No.	Cal Due	Comparator Used		Cal Due	Procedure Used
100 mg	B316238717	A031	07/01/19	A5XL	131	01/01/19	Multi A-B

Comments

No remarks

1 As Found / 1 Total

16280500A

Definitions

Nominal Value - The value as labeled on the weight or defined by shape in accordance with OIML R111 for milligram weights.

True Mass - The mass value of the weight if measured in a vacuum.

Conventional Mass - For a mass at 20 °C, "Conventional Mass" is the mass of a reference standard of density 8000 kg/m³ which it balances in air with a density of 1.2 kg/m³. This value should be referenced when testing the accuracy of a weighing device using any of the nominal values contained in this certificate. The As Found results will equal the As Left in cases where no adjustment or replacement was required.

Uncertainty - All Uncertainty values are reported at approximately 95% confidence level (k=2). The uncertainty value does not include a component for the affects due to magnetism.

Tolerance - The acceptable range of deviation (positive and negative) from the nominal value, including the uncertainty, as defined by ASTM and OIML for the respective classes.

Density - The assumed density of the material used by the manufacturer.

Calibration Process - This calibration was performed in the Level I Mass Metrology Laboratory at 201 Wolf Dr Thorofare, New Jersey 08086 unless otherwise noted in Comments.

OOT - The As Found measurement result combined with the uncertainty exceeded the tolerance for the specified weight class.

A - Weight was adjusted after As Found testing to within the appropriate tolerance class.

R - The received weight was replaced due to an out of tolerance condition and the weight was not adjustable or the weight for this nominal value was missing.

MICRO PRECISION CALIBRATION, INC.
22835 INDUSTRIAL PLACE
GRASS VALLEY CA 95949
530-268-1860

Certificate of Calibration

ilac-MRA ANAB ACCREDITED ISO/IEC 17025 CALIBRATION LABORATORY AC-1969.00

Date: Mar 24, 2021 **Cert No. 551220084177619**

Customer:

STOVE BUILDERS INTERNATIONAL INC.

PORTES 11-12
250 DE COPENHAGUE
SAINT-AUGUSTIN-DE-DESMAURES QC G3A 2H3

		Work Order #:	SAC-70114404
		Purchase Order #:	68065
MPC Control #:	DA0650	Serial Number:	16425450039
Asset ID:	SBI-241	Department:	N/A
Gage Type:	DIGITAL VANE/HOT-WIRE ANEMOMETER	Performed By:	BARRY MORRIS
Manufacturer:	TPI, INC.	Received Condition:	IN TOLERANCE
Model Number:	575	Returned Condition:	IN TOLERANCE
Size:	N/A	Cal. Date:	March 24, 2021
Temp/RH:	68.0°F / 45.0%	Cal. Interval:	12 MONTHS
Location:	Calibration performed at MPC facility	Cal. Due Date:	March 24, 2022

Calibration Notes:

See attached datasheet (1 page)

Standards Used to Calibrate Equipment

I.D.	Description.	Model	Serial	Manufacturer	Cal. Due Date	Traceability #
CJ5100	WIND TUNNEL WITH CONTROLLER	JS-500	375/305	INTERACTIVE INSTRUMENTS	Oct 31, 2021	551220083300219
DA8367	PRECISION PLATINUM RESISTANCE THERMOMETER SPRT W/ CASE	8167-25	180322	LEEDS & NORTHRUP CO.	Oct 31, 2022	551220083240044
DF8059	DIGITAL MULTIMETER	34401A	US36090404	HEWLETT PACKARD	Apr 30, 2021	551220083566237
DS2399	AIR VELOCITY TRANSDUCER	8455-03	56020622	TSI	Oct 3, 2021	800406957

Procedures Used in this Event

Procedure Name	Description
MPC-AIR-001 Rev. 01	Air Velocity, Temperature and Flow Meters, General, rev01, Feb-11-2020

Calibrating Technician: Barry Morris
BARRY MORRIS

QC Approval: Jack R. Wertz III
JACK WERTZ III

STATEMENTS OF PASS OR FAIL CONFORMANCE: The uncertainty of measurement has been taken into account when determining compliance with specification. All measurements and test results guard banded to ensure the probability of false-accept does not exceed 2% in compliance with ANSI/NCSL Z540.3-2006 and in case without guard banded the probability of false-accept depending on test uncertainty ratio.

THE CALIBRATION REPORT STATUS:
PASS- Term used when compliance statement is given, and the measurement result is PASS.
PASS²- Term used when compliance statement is given, and the measurement result is conditional passed or PASS².
FAIL- Term used when compliance statement is given, and the measurement result is FAIL.
FAIL²- Term used when compliance statement is given, and the measurement result is conditional failed or FAIL².
REPORT OF VALUE - Term used when reported measurement is not requiring compliance statement in report.
ADJUSTED- When adjustments are made to an instrument which changes the value of measurement from what was measured as found to new value as left.
LIMITED - When an instrument fails calibration but is still functional in a limited manner.

The expanded uncertainty of measurement is stated as the standard uncertainty of measurement multiplied by the coverage factor k=2, which for a normal distribution corresponds to a coverage probability of approximately 95%, unless otherwise stated. This calibration report complies with ISO/IEC 17025:2017 and ANSI/NCSL Z540.3. Calibration cycles and resulting due dates were submitted/approved by the customer. Any number of factors may cause an instrument to drift out of tolerance before the next scheduled calibration. Recalibration cycles should be based on frequency of use, environmental conditions and customer's established systematic accuracy. All standards are traceable to SI through the National Institute of Standards and Technology (NIST) and/or recognized national or international standards laboratories. Services rendered include proper manufacturer's service instruction and are warranted for no less than thirty (30) days. The information on this report pertains only to the instrument identified, this may not be reproduced in part or in a whole without the prior written approval of the issuing MP Calibration Laboratory.

MICRO PRECISION

Calibration Report of TPI Inc. 575 Digital Vane/Hot-Wire Anemometer

MPC Control #:	DA0650	Serial Number:	16425450039
Asset ID:	SBI-241	Calibration Date:	March 24, 2024

Velocity Measurement

Hot Wire

Function Tested	Nominal	Lower Limit	As Found	As Left	Upper Limit	Result	Uncertainty (±)
0.2 to 20 m/s	5.0 m/s	4.7 m/s	4.9 m/s	4.9 m/s	5.3 m/s	PASS	0.15 m/s
	10.0 m/s	9.7 m/s	9.9 m/s	9.9 m/s	10.4 m/s	PASS[Z]	0.29 m/s
	15.0 m/s	14.6 m/s	15.0 m/s	15.0 m/s	15.4 m/s	PASS	0.30 m/s
	19.0 m/s	18.6 m/s	18.8 m/s	18.8 m/s	19.4 m/s	PASS[Z]	0.38 m/s

Vane

Function Tested	Nominal	Lower Limit	As Found	As Left	Upper Limit	Result	Uncertainty (±)
0.4 to 25 m/s	6.3 m/s	5.8 m/s	6.2 m/s	6.2 m/s	6.7 m/s	PASS	0.18 m/s
	12.5 m/s	12.0 m/s	12.4 m/s	12.4 m/s	13.1 m/s	PASS	0.36 m/s
	18.8 m/s	18.1 m/s	18.9 m/s	18.9 m/s	19.4 m/s	PASS	0.38 m/s
	23.8 m/s	23.0 m/s	23.9 m/s	23.9 m/s	24.5 m/s	PASS	0.48 m/s

Temperature Measurement

Function Tested	Nominal	Lower Limit	As Found	As Left	Upper Limit	Result	Uncertainty (±)
-20°C to 80°C	20.0 °C	19.3 °C	20.2 °C	20.2 °C	20.7 °C	PASS	0.0090 °C
	40.0 °C	39.1 °C	40.1 °C	40.1 °C	40.9 °C	PASS	0.0090 °C
	60.0 °C	58.9 °C	60.1 °C	60.1 °C	61.1 °C	PASS	0.0090 °C
	76.0 °C	74.7 °C	76.2 °C	76.2 °C	77.3 °C	PASS	0.0090 °C

Statements of Pass or Fail Conformance

The uncertainty of measurement has been taken into account when determining compliance with specification, as per ILAC-G8:03/2009.
All measurements and test results guard banded to ensure the probability of false-accept does not exceed 2% in compliance with ANSI/NCSL Z540.3-2006.

The status of compliance with the acceptance criteria is reported as:

- PASS - Compliant with specification
- FAIL - Not compliant with specification.
- FAIL[Z] - The measured value is not within the acceptance limits. However, a portion of the expanded uncertainty of measurement at 95% is within the specified tolerance.
- PASS[Z] - The measured value is within acceptance limits. However, a portion of the expanded uncertainty of measurement at 95% exceeds the specified tolerance.

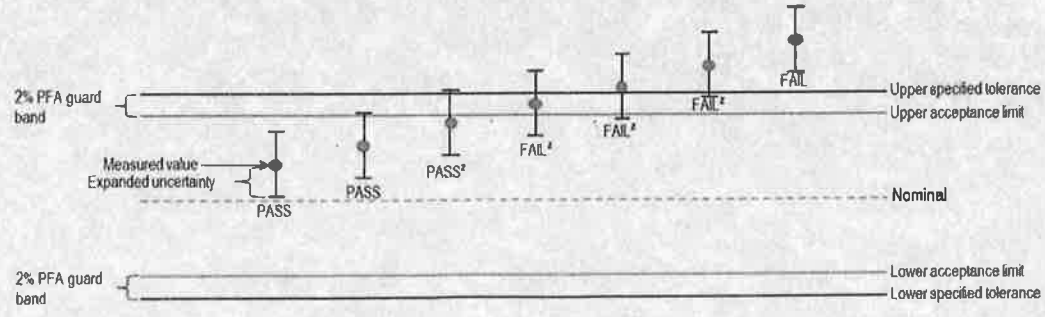

Acceptance limits for ≤ 2 % probability of false accept (PFA) guard band

The expanded uncertainty of measurement is stated as the standard uncertainty of measurement multiplied by the coverage factor k=2, which for a normal distribution corresponds to a coverage probability of approximately 95%, unless otherwise stated.
This calibration report complies with ISO/IEC 17025:2017 and ANSI/NCSL Z540.3 Method 6-Guard Bands based on Test Uncertainty Ratio.

Confidential: Controlled Document.
Cannot be reproduced without the approval of the Quality Department.

CERTIFICATE OF CALIBRATION

ACCREDITED
CALIBRATION
CERT #2260.01

Certificate Number: 2021001423

Manufacturer:	Dwyer Instruments Inc.	***RMA:***	AC21021246
Model:	MS-121-LCD	***Workorder:***	2021001423
Description:	Digital Pressure Gauge	***Barcode:***	AL0015073-P
Serial:	E52U01007411	***Received Conditions:***	Out of Tolerance
ID:	SBI-248	***Calibration Date:***	25-Feb-2021
Customer:	STOVE BUILDER INTERNATIONAL INC. 250 RUE DE COPENHAGUE ST-AUGUSTIN-DE-DESMAURES QC G3A 2H3	***Calibration Due:***	25-Feb-2022
		Temperature:	22.05°C
		Humidity:	25.4%RH

STATEMENT OF UNCERTAINTY: The reported expanded uncertainty of measurement is stated as the standard measurement uncertainty multiplied by the coverage factor K = 2, which for a normal distribution corresponds to a coverage probability of approximately 95 percent. Alpha Controls & Instrumentation Inc. certifies this instrument was calibrated on the date shown using standards traceable to NIST/NRC or accepted intrinsic standards and in compliance with ISO/IEC-17025:2017 and ANSI/NCSL Z540-1.

Any statement of compliance is made without taking measurement uncertainty into account and is based on UUT performance against required tolerance only. The customer must ensure equipment calibrated meets the intended use.

Tolerance is based on manufacturer specification if not stated otherwise. Calibration results relate to items calibrated only.

This certificate shall not be reproduced except in full without written approval of Alpha Controls and Instrumentation Inc.

STANDARDS USED

Description	***Model***	***ID***	***Cal Date***	***Due Date***
Low Pressure Calibrator	Ruska 7250LP	PRE-CAL-06	29-Nov-2020	29-Nov-2021

Notes: Adjusted trim pots.

Performed by: Sree Chukka
Technician
(digitally signed on 25-Feb-2021 12:04 pm)

QA Reviewed by: Slava Peciurov
Lab Manager
(digitally signed on 25-Feb-2021 2:31 pm)

Form: ROC101 Rev 9.3.a

Procedure: Dwyer MS-121-LCD 0 to 0.1;0.25 InH2O/7520Ip 8845A (1.0.A) **As Found (Fail)**

Test Description	True Value	Test Results	Tolerance	Lower Limit	Upper Limit	Status	Uncertainty
Range: 0 to 0.25 inH2O							
Output signal: 4 to 20 mA							
PRESSURE TEST							
Display Reading						-0.0005	
Output @ 0.0000 inH2O, mA						3.99	
0.0000 inH2O	0.0000 inH2O	-0.0002 inH2O	±0.0025 inH2O	-0.0025 inH2O	0.0025 inH2O	Pass	0.00015 inH2O
Display Reading						0.0610	
Output @ 0.0625 inH2O, mA						7.91	
0.0625 inH2O	0.0625 inH2O	0.0611 inH2O	±0.0025 inH2O	0.0600 inH2O	0.0650 inH2O	Pass	0.00015 inH2O
Display Reading						0.1218	
Output @ 0.1250 inH2O, mA						11.78	
0.1250 inH2O	0.1250 inH2O	0.1216 inH2O	±0.0025 inH2O	0.1225 inH2O	0.1275 inH2O	Fail	0.00015 inH2O
Display Reading						0.1826	
Output @ 0.1875 inH2O, mA						15.68	
0.1875 inH2O	0.1875 inH2O	0.1825 inH2O	±0.0025 inH2O	0.1850 inH2O	0.1900 inH2O	Fail	0.00015 inH2O
Display Reading						0.2463	
Output @ 0.2500 inH2O, mA						19.73	
0.2500 inH2O	0.2500 inH2O	0.2458 inH2O	±0.0025 inH2O	0.2475 inH2O	0.2525 inH2O	Fail	0.00015 inH2O
Display Reading						0.1846	
Output @ 0.1875 inH2O, mA						15.76	
0.1875 inH2O	0.1875 inH2O	0.1838 inH2O	±0.0025 inH2O	0.1850 inH2O	0.1900 inH2O	Fail	0.00015 inH2O
Display Reading						0.1240	
Output @ 0.1250 inH2O, mA						11.97	
0.1250 inH2O	0.1250 inH2O	0.1245 inH2O	±0.0025 inH2O	0.1225 inH2O	0.1275 inH2O	Pass	0.00015 inH2O
Display Reading						0.0632	
Output @ 0.0625 inH2O, mA						8.04	
0.0625 inH2O	0.0625 inH2O	0.0631 inH2O	±0.0025 inH2O	0.0600 inH2O	0.0650 inH2O	Pass	0.00015 inH2O
Display Reading						0.000	
Output @ 0.0000 inH2O, mA						4.02	
0.0000 inH2O	0.0000 inH2O	0.0003 inH2O	±0.0025 inH2O	-0.0025 inH2O	0.0025 inH2O	Pass	0.00015 inH2O

Procedure: Dwyer MS-121-LCD 0 to 0.1;0.25 InH2O/7520Ip 8845A (1.0.A) **As Left (Pass)**

Test Description	True Value	Test Results	Tolerance	Lower Limit	Upper Limit	Status	Uncertainty
Range: 0 to 0.25 inH2O							
Output signal: 4 to 20 mA							
PRESSURE TEST							
Display Reading						0.0007	
Output @ 0.0000 inH2O, mA						4.04	
0.0000 inH2O	0.0000 inH2O	0.0006 inH2O	±0.0025 inH2O	-0.0025 inH2O	0.0025 inH2O	Pass	0.00015 inH2O
Display Reading						0.0627	
Output @ 0.0625 inH2O, mA						8.02	
0.0625 inH2O	0.0625 inH2O	0.0628 inH2O	±0.0025 inH2O	0.0600 inH2O	0.0650 inH2O	Pass	0.00015 inH2O
Display Reading						0.1238	

Test Description	True Value	Test Results	Tolerance	Lower Limit	Upper Limit	Status	Uncertainty
Output @ 0.1250 inH2O, mA						11.93	
0.1250 inH2O	0.1250 inH2O	0.1239 inH2O	±0.0025 inH2O	0.1225 inH2O	0.1275 inH2O	Pass	0.00015 inH2O
Display Reading						0.1850	
Output @ 0.1875 inH2O, mA						15.85	
0.1875 inH2O	0.1875 inH2O	0.1852 inH2O	±0.0025 inH2O	0.1850 inH2O	0.1900 inH2O	Pass	0.00015 inH2O
Display Reading						0.2476	
Output @ 0.2500 inH2O, mA						19.85	
0.2500 inH2O	0.2500 inH2O	0.2477 inH2O	±0.0025 inH2O	0.2475 inH2O	0.2525 inH2O	Pass	0.00015 inH2O
Display Reading						0.1860	
Output @ 0.1875 inH2O, mA						15.92	
0.1875 inH2O	0.1875 inH2O	0.1863 inH2O	±0.0025 inH2O	0.1850 inH2O	0.1900 inH2O	Pass	0.00015 inH2O
Display Reading						0.1252	
Output @ 0.1250 inH2O, mA						11.98	
0.1250 inH2O	0.1250 inH2O	0.1247 inH2O	±0.0025 inH2O	0.1225 inH2O	0.1275 inH2O	Pass	0.00015 inH2O
Display Reading						0.0640	
Output @ 0.0625 inH2O, mA						8.10	
0.0625 inH2O	0.0625 inH2O	0.0641 inH2O	±0.0025 inH2O	0.0600 inH2O	0.0650 inH2O	Pass	0.00015 inH2O
Display Reading						0.0015	
Output @ 0.0000 inH2O, mA						4.08	
0.0000 inH2O	0.0000 inH2O	0.0013 inH2O	±0.0025 inH2O	-0.0025 inH2O	0.0025 inH2O	Pass	0.00015 inH2O

END OF CERTIFICATE

CERTIFICATE OF CALIBRATION

ACCREDITED
CALIBRATION
CERT #2260.01

Certificate Number: 2021001424

Manufacturer:	Dwyer Instruments Inc.	***RMA:***	AC21021246
Model:	MS-121-LCD	***Workorder:***	2021001424
Description:	Digital Pressure Gauge	***Barcode:***	AL0015070-P
Serial:	E52U0100523	***Received Conditions:***	Out of Tolerance
ID:	SBI-250	***Calibration Date:***	25-Feb-2021
Customer:	STOVE BUILDER INTERNATIONAL INC. 250 RUE DE COPENHAGUE ST-AUGUSTIN-DE-DESMAURES QC G3A 2H3	***Calibration Due:***	25-Feb-2022
		Temperature:	22.13°C
		Humidity:	27.4%RH

STATEMENT OF UNCERTAINTY: The reported expanded uncertainty of measurement is stated as the standard measurement uncertainty multiplied by the coverage factor K = 2, which for a normal distribution corresponds to a coverage probability of approximately 95 percent. Alpha Controls & Instrumentation Inc. certifies this instrument was calibrated on the date shown using standards traceable to NIST/NRC or accepted intrinsic standards and in compliance with ISO/IEC-17025:2017 and ANSI/NCSL Z540-1.

Any statement of compliance is made without taking measurement uncertainty into account and is based on UUT performance against required tolerance only. The customer must ensure equipment calibrated meets the intended use.

Tolerance is based on manufacturer specification if not stated otherwise. Calibration results relate to items calibrated only.

This certificate shall not be reproduced except in full without written approval of Alpha Controls and Instrumentation Inc.

STANDARDS USED

Description	***Model***	***ID***	***Cal Date***	***Due Date***
Low Pressure Calibrator	Ruska 7250LP	PRE-CAL-06	29-Nov-2020	29-Nov-2021

Notes: Adjusted trim pots.

Second decimal digit has missing display segments.

Performed by: Sree Chukka
Technician
(digitally signed on 25-Feb-2021 11:27 am)

QA Reviewed by: Slava Peciurov
Lab Manager
(digitally signed on 25-Feb-2021 11:56 am)

Form: ROC101 Rev 9.3.a

Procedure: Dwyer MS-121-LCD 0 to 0.1;0.25 InH2O/7520ip 8845A (1.0.A) **As Found (Fail)**

Test Description	True Value	Test Results	Tolerance	Lower Limit	Upper Limit	Status	Uncertainty
Range: 0 to 0.25 inH2O							
Output signal: 4 to 20 mA							
PRESSURE TEST							
Display Reading						0	
Output @ 0.0000 inH2O, mA						4.01	
0.0000 inH2O	0.0000 inH2O	0.0002 inH2O	±0.0025 inH2O	-0.0025 inH2O	0.0025 inH2O	Pass	0.00015 inH2O
Display Reading						0.0615	
Output @ 0.0625 inH2O, mA						7.94	
0.0625 inH2O	0.0625 inH2O	0.0616 inH2O	±0.0025 inH2O	0.0600 inH2O	0.0650 inH2O	Pass	0.00015 inH2O
Display Reading						0.1211	
Output @ 0.1250 inH2O, mA						11.76	
0.1250 inH2O	0.1250 inH2O	0.1213 inH2O	±0.0025 inH2O	0.1225 inH2O	0.1275 inH2O	Fail	0.00015 inH2O
Display Reading						0.1816	
Output @ 0.1875 inH2O, mA						15.65	
0.1875 inH2O	0.1875 inH2O	0.1820 inH2O	±0.0025 inH2O	0.1850 inH2O	0.1900 inH2O	Fail	0.00015 inH2O
Display Reading						0.2432	
Output @ 0.2500 inH2O, mA						19.59	
0.2500 inH2O	0.2500 inH2O	0.2436 inH2O	±0.0025 inH2O	0.2475 inH2O	0.2525 inH2O	Fail	0.00015 inH2O
Display Reading						0.1831	
Output @ 0.1875 inH2O, mA						15.77	
0.1875 inH2O	0.1875 inH2O	0.1839 inH2O	±0.0025 inH2O	0.1850 inH2O	0.1900 inH2O	Fail	0.00015 inH2O
Display Reading						0.1226	
Output @ 0.1250 inH2O, mA						11.85	
0.1250 inH2O	0.1250 inH2O	0.1227 inH2O	±0.0025 inH2O	0.1225 inH2O	0.1275 inH2O	Pass	0.00015 inH2O
Display Reading						0.0625	
Output @ 0.0625 inH2O, mA						8.02	
0.0625 inH2O	0.0625 inH2O	0.0628 inH2O	±0.0025 inH2O	0.0600 inH2O	0.0650 inH2O	Pass	0.00015 inH2O
Display Reading						0.0005	
Output @ 0.0000 inH2O, mA						4.03	
0.0000 inH2O	0.0000 inH2O	0.0005 inH2O	±0.0025 inH2O	-0.0025 inH2O	0.0025 inH2O	Pass	0.00015 inH2O

Procedure: Dwyer MS-121-LCD 0 to 0.1;0.25 InH2O/7520ip 8845A (1.0.A) **As Left (Pass)**

Test Description	True Value	Test Results	Tolerance	Lower Limit	Upper Limit	Status	Uncertainty
Range: 0 to 0.25 inH2O							
Output signal: 4 to 20 mA							
PRESSURE TEST							
Display Reading						0.0012	
Output @ 0.0000 inH2O, mA						4.08	
0.0000 inH2O	0.0000 inH2O	0.0013 inH2O	±0.0025 inH2O	-0.0025 inH2O	0.0025 inH2O	Pass	0.00015 inH2O
Display Reading						0.0632	
Output @ 0.0625 inH2O, mA						8.06	
0.0625 inH2O	0.0625 inH2O	0.0634 inH2O	±0.0025 inH2O	0.0600 inH2O	0.0650 inH2O	Pass	0.00015 inH2O
Display Reading						0.1238	

Test Description	True Value	Test Results	Tolerance	Lower Limit	Upper Limit	Status	Uncertainty
Output @ 0.1250 inH2O, mA						11.92	
0.1250 inH2O	0.1250 inH2O	0.1238 inH2O	±0.0025 inH2O	0.1225 inH2O	0.1275 inH2O	Pass	0.00015 inH2O
Display Reading						0.1851	
Output @ 0.1875 inH2O, mA						15.87	
0.1875 inH2O	0.1875 inH2O	0.1855 inH2O	±0.0025 inH2O	0.1850 inH2O	0.1900 inH2O	Pass	0.00015 inH2O
Display Reading						0.2476	
Output @ 0.2500 inH2O, mA						19.87	
0.2500 inH2O	0.2500 inH2O	0.2480 inH2O	±0.0025 inH2O	0.2475 inH2O	0.2525 inH2O	Pass	0.00015 inH2O
Display Reading						0.1860	
Output @ 0.1875 inH2O, mA						15.94	
0.1875 inH2O	0.1875 inH2O	0.1866 inH2O	±0.0025 inH2O	0.1850 inH2O	0.1900 inH2O	Pass	0.00015 inH2O
Display Reading						0.1245	
Output @ 0.1250 inH2O, mA						11.99	
0.1250 inH2O	0.1250 inH2O	0.1248 inH2O	±0.0025 inH2O	0.1225 inH2O	0.1275 inH2O	Pass	0.00015 inH2O
Display Reading						0.0645	
Output @ 0.0625 inH2O, mA						8.13	
0.0625 inH2O	0.0625 inH2O	0.0645 inH2O	±0.0025 inH2O	0.0600 inH2O	0.0650 inH2O	Pass	0.00015 inH2O
Display Reading						0.0017	
Output @ 0.0000 inH2O, mA						4.08	
0.0000 inH2O	0.0000 inH2O	0.0013 inH2O	±0.0025 inH2O	-0.0025 inH2O	0.0025 inH2O	Pass	0.00015 inH2O

END OF CERTIFICATE

CERTIFICATE OF CALIBRATION

ACCREDITED
CALIBRATION
CERT #2260.01

Certificate Number: 2021000447

Manufacturer:	Dwyer Instruments Inc.	***RMA:***	AC21011264
Model:	626-06-GH-P1-E1-S1	***Workorder:***	2021000447
Description:	Pressure Transmitter	***Barcode:***	AL00024176-P
Serial:	N/A	***Received Conditions:***	In Tolerance
ID:	SBI-299	***Calibration Date:***	22-Jan-2021
Customer:	STOVE BUILDER INTERNATIONAL INC. 250 RUE DE COPENHAGUE ST-AUGUSTIN-DE-DESMAURES QC G3A 2H3	***Calibration Due:***	22-Jan-2022
		Temperature:	21.2°C
		Humidity:	19.1%RH

STATEMENT OF UNCERTAINTY: The reported expanded uncertainty of measurement is stated as the standard measurement uncertainty multiplied by the coverage factor K = 2, which for a normal distribution corresponds to a coverage probability of approximately 95 percent. Alpha Controls & Instrumentation Inc. certifies this instrument was calibrated on the date shown using standards traceable to NIST/NRC or accepted intrinsic standards and in compliance with ISO/IEC-17025:2017 and ANSI/NCSL Z540-1.

Any statement of compliance is made without taking measurement uncertainty into account and is based on UUT performance against required tolerance only. The customer must ensure equipment calibrated meets the intended use.

Tolerance is based on manufacturer specification if not stated otherwise. Calibration results relate to items calibrated only.

This certificate shall not be reproduced except in full without written approval of Alpha Controls and Instrumentation Inc.

STANDARDS USED

Description	***Model***	***ID***	***Cal Date***	***Due Date***
Multimeter	Fluke 8845A	ELC-MTR-04	11-Jan-2021	11-Jan-2022
Pressure Controller/Calibrator	DH Instruments PPC3	PRE-CAL-04	16-Jun-2020	16-Jun-2021
Reference Pressure Monitor	Fluke RPM4	PRE-MTR-04	13-May-2020	13-May-2021

Notes: None.

Performed by: Tony Wheaton
Technician
(digitally signed on 22-Jan-2021 1:34 pm)

QA Reviewed by: Slava Peciurov
Lab Manager
(digitally signed on 22-Jan-2021 3:07 pm)

Form: ROC101 Rev 9.3.a

Procedure: Pressure Transmitter: psi/4-20mA: CAL VER /PPC3,8845 (1.1.A) **FOUND-LEFT (Pass)**

Test Description	True Value	Test Results	Tolerance	Lower Limit	Upper Limit	Status	Uncertainty
Calibrated in the vertical position.							
Range: 0 to 5 psi							
Output: 4-20 mA							
PRESSURE TEST							
Output=4.013 mA							
0.0000 psi	0.0000 psi	0.004 psi	±0.0300 psi	-0.030 psi	0.030 psi	Pass	4.5e-003 psi
Output=8 mA							
1.2500 psi	1.2500 psi	1.250 psi	±0.0300 psi	1.220 psi	1.280 psi	Pass	5.8e-003 psi
Output=11.998 mA							
2.5000 psi	2.5000 psi	2.499 psi	±0.0300 psi	2.470 psi	2.530 psi	Pass	7.0e-003 psi
Output=16.022 mA							
3.7500 psi	3.7500 psi	3.757 psi	±0.0300 psi	3.720 psi	3.780 psi	Pass	8.2e-003 psi
Output=20.055 mA							
5.0000 psi	5.0000 psi	5.018 psi	±0.0300 psi	4.970 psi	5.030 psi	Pass	9.5e-003 psi
Output=16.029 mA							
3.7500 psi	3.7500 psi	3.759 psi	±0.0300 psi	3.720 psi	3.780 psi	Pass	8.2e-003 psi
Output=12.014 mA							
2.5000 psi	2.5000 psi	2.504 psi	±0.0300 psi	2.470 psi	2.530 psi	Pass	7.0e-003 psi
Output=8.017 mA							
1.2500 psi	1.2500 psi	1.255 psi	±0.0300 psi	1.220 psi	1.280 psi	Pass	5.8e-003 psi
Output=4.033 mA							
0.0000 psi	0.0000 psi	0.010 psi	±0.0300 psi	-0.030 psi	0.030 psi	Pass	4.5e-003 psi

END OF CERTIFICATE

CERTIFICATE OF CALIBRATION

ACCREDITED
CALIBRATION
CERT #2260.01

Certificate Number: 2021000448

Manufacturer:	Dwyer Instruments Inc.	***RMA:***	AC21011264
Model:	626-06-GH-P1-E1-S1	***Workorder:***	2021000448
Description:	Pressure Transmitter	***Barcode:***	AL00024179-P
Serial:	N/A	***Received Conditions:***	In Tolerance
ID:	SBI-300	***Calibration Date:***	22-Jan-2021
Customer:	STOVE BUILDER INTERNATIONAL INC. 250 RUE DE COPENHAGUE ST-AUGUSTIN-DE-DESMAURES QC G3A 2H3	***Calibration Due:***	22-Jan-2022
		Temperature:	20.86°C
		Humidity:	18.2%RH

STATEMENT OF UNCERTAINTY: The reported expanded uncertainty of measurement is stated as the standard measurement uncertainty multiplied by the coverage factor K = 2, which for a normal distribution corresponds to a coverage probability of approximately 95 percent. Alpha Controls & Instrumentation Inc. certifies this instrument was calibrated on the date shown using standards traceable to NIST/NRC or accepted intrinsic standards and in compliance with ISO/IEC-17025:2017 and ANSI/NCSL Z540-1.

Any statement of compliance is made without taking measurement uncertainty into account and is based on UUT performance against required tolerance only. The customer must ensure equipment calibrated meets the intended use.

Tolerance is based on manufacturer specification if not stated otherwise. Calibration results relate to items calibrated only.

This certificate shall not be reproduced except in full without written approval of Alpha Controls and Instrumentation Inc.

STANDARDS USED

Description	*Model*	*ID*	*Cal Date*	*Due Date*
Multimeter	Fluke 8845A	ELC-MTR-04	11-Jan-2021	11-Jan-2022
Pressure Controller/Calibrator	DH Instruments PPC3	PRE-CAL-04	16-Jun-2020	16-Jun-2021
Reference Pressure Monitor	Fluke RPM4	PRE-MTR-04	13-May-2020	13-May-2021

Notes: None.

Performed by: Tony Wheaton
Technician
(digitally signed on 22-Jan-2021 1:09 pm)

QA Reviewed by: Slava Peciurov
Lab Manager
(digitally signed on 22-Jan-2021 3:07 pm)

Form: ROC101 Rev 9.3.a

Procedure: Pressure Transmitter: psi/4-20mA: CAL VER /PPC3,8845 (1.1.A) **FOUND-LEFT (Pass)**

Test Description	True Value	Test Results	Tolerance	Lower Limit	Upper Limit	Status	Uncertainty
Calibrated in the vertical position.							
Range: 0 to 5 psi							
Output: 4-20 mA							
PRESSURE TEST							
Output=4.001 mA							
0.0000 psi	0.0000 psi	0.000 psi	±0.0300 psi	-0.030 psi	0.030 psi	Pass	4.5e-003 psi
Output=7.975 mA							
1.2500 psi	1.2500 psi	1.242 psi	±0.0300 psi	1.220 psi	1.280 psi	Pass	5.7e-003 psi
Output=11.983 mA							
2.5000 psi	2.5000 psi	2.495 psi	±0.0300 psi	2.470 psi	2.530 psi	Pass	7.0e-003 psi
Output=16.011 mA							
3.7500 psi	3.7500 psi	3.754 psi	±0.0300 psi	3.720 psi	3.780 psi	Pass	8.2e-003 psi
Output=20.05 mA							
5.0000 psi	5.0000 psi	5.016 psi	±0.0300 psi	4.970 psi	5.030 psi	Pass	9.5e-003 psi
Output=16.014 mA							
3.7500 psi	3.7500 psi	3.755 psi	±0.0300 psi	3.720 psi	3.780 psi	Pass	8.2e-003 psi
Output=11.991 mA							
2.5000 psi	2.5000 psi	2.498 psi	±0.0300 psi	2.470 psi	2.530 psi	Pass	7.0e-003 psi
Output=7.986 mA							
1.2500 psi	1.2500 psi	1.245 psi	±0.0300 psi	1.220 psi	1.280 psi	Pass	5.7e-003 psi
Output=3.999 mA							
0.0000 psi	0.0000 psi	0.000 psi	±0.0300 psi	-0.030 psi	0.030 psi	Pass	4.5e-003 psi

END OF CERTIFICATE

CERTIFICATE OF CALIBRATION

ACCREDITED
CALIBRATION
CERT #2260.01

Certificate Number: 2021000445

Manufacturer:	Dwyer Instruments Inc.	***RMA:***	AC21011264
Model:	628-00C-GH-P1-E1-S1	***Workorder:***	2021000445
Description:	Pressure Transmitter	***Barcode:***	AL00024178-P
Serial:	N/A	***Received Conditions:***	In Tolerance
ID:	SBI-306	***Calibration Date:***	22-Jan-2021
Customer:	STOVE BUILDER INTERNATIONAL INC. 250 RUE DE COPENHAGUE ST-AUGUSTIN-DE-DESMAURES QC G3A 2H3	***Calibration Due:***	22-Jan-2022
		Temperature:	20.8°C
		Humidity:	21.2%RH

STATEMENT OF UNCERTAINTY: The reported expanded uncertainty of measurement is stated as the standard measurement uncertainty multiplied by the coverage factor K = 2, which for a normal distribution corresponds to a coverage probability of approximately 95 percent. Alpha Controls & Instrumentation Inc. certifies this instrument was calibrated on the date shown using standards traceable to NIST/NRC or accepted intrinsic standards and in compliance with ISO/IEC-17025:2017 and ANSI/NCSL Z540-1.

Any statement of compliance is made without taking measurement uncertainty into account and is based on UUT performance against required tolerance only. The customer must ensure equipment calibrated meets the intended use.

Tolerance is based on manufacturer specification if not stated otherwise. Calibration results relate to items calibrated only.

This certificate shall not be reproduced except in full without written approval of Alpha Controls and Instrumentation Inc.

STANDARDS USED

Description	*Model*	*ID*	*Cal Date*	*Due Date*
Multimeter	Fluke 8845A	ELC-MTR-04	11-Jan-2021	11-Jan-2022
Pressure Controller/Calibrator	DH Instruments PPC3	PRE-CAL-04	16-Jun-2020	16-Jun-2021
Reference Pressure Monitor	Fluke RPM4	PRE-MTR-04	13-May-2020	13-May-2021

Notes: Tolerance is specified by Customer.

Performed by: Tony Wheaton
Technician
(digitally signed on 22-Jan-2021 10:18 am)

QA Reviewed by: Slava Peciurov
Lab Manager
(digitally signed on 22-Jan-2021 12:07 pm)

Form: ROC101 Rev 9.3.a

Procedure: Pressure/Vacuum: CAL VER /DHI PPC3 (2.3.A) **FOUND-LEFT (Pass)**

Test Description	True Value	Test Results	Tolerance	Lower Limit	Upper Limit	Status	Uncertainty
VACUUM TEST							
MEASUREMENT UNITS: inHg							
OUT = 5.066 mA							
-28.0000	-28.0000	-28.001	±0.4500	-28.450	-27.550	Pass	3.1e-003
OUT = 7.974 mA							
-22.5000	-22.5000	-22.548	±0.4500	-22.950	-22.050	Pass	3.1e-003
OUT = 11.972 mA							
-15.0000	-15.0000	-15.052	±0.4500	-15.450	-14.550	Pass	3.1e-003
OUT = 15.998 mA							
-7.5000	-7.5000	-7.504	±0.4500	-7.950	-7.050	Pass	3.1e-003
OUT = 20.032 mA							
0.0000	0.0000	-0.060	±0.4500	-0.450	0.450	Pass	3.1e-003
OUT = 16.032 mA							
-7.5000	-7.5000	-7.440	±0.4500	-7.950	-7.050	Pass	3.1e-003
OUT = 12.013 mA							
-15.0000	-15.0000	-14.976	±0.4500	-15.450	-14.550	Pass	3.1e-003
OUT = 7.976 mA							
-22.5000	-22.5000	-22.540	±0.4500	-22.950	-22.050	Pass	3.1e-003
OUT = 4.995 mA							
-28.0000	-28.0000	-28.134	±0.4500	-28.450	-27.550	Pass	3.1e-003

END OF CERTIFICATE

CERTIFICATE OF CALIBRATION

ACCREDITED
CALIBRATION
CERT #2260.01

Certificate Number: 2021000446

Manufacturer:	Dwyer Instruments Inc.	***RMA:***	AC21011264
Model:	628-00C-GH-P1-E1-S1	***Workorder:***	2021000446
Description:	Pressure Transmitter	***Barcode:***	AL00024177-P
Serial:	N/A	***Received Conditions:***	In Tolerance
ID:	SBI-309	***Calibration Date:***	22-Jan-2021
Customer:	STOVE BUILDER INTERNATIONAL INC. 250 RUE DE COPENHAGUE ST-AUGUSTIN-DE-DESMAURES QC G3A 2H3	***Calibration Due:***	22-Jan-2022
		Temperature:	20.75°C
		Humidity:	17.9%RH

STATEMENT OF UNCERTAINTY: The reported expanded uncertainty of measurement is stated as the standard measurement uncertainty multiplied by the coverage factor K = 2, which for a normal distribution corresponds to a coverage probability of approximately 95 percent. Alpha Controls & Instrumentation Inc. certifies this instrument was calibrated on the date shown using standards traceable to NIST/NRC or accepted intrinsic standards and in compliance with ISO/IEC-17025:2017 and ANSI/NCSL Z540-1.

Any statement of compliance is made without taking measurement uncertainty into account and is based on UUT performance against required tolerance only. The customer must ensure equipment calibrated meets the intended use.

Tolerance is based on manufacturer specification if not stated otherwise. Calibration results relate to items calibrated only.

This certificate shall not be reproduced except in full without written approval of Alpha Controls and Instrumentation Inc.

STANDARDS USED

Description	***Model***	***ID***	***Cal Date***	***Due Date***
Multimeter	Fluke 8845A	ELC-MTR-04	11-Jan-2021	11-Jan-2022
Pressure Controller/Calibrator	DH Instruments PPC3	PRE-CAL-04	16-Jun-2020	16-Jun-2021
Reference Pressure Monitor	Fluke RPM4	PRE-MTR-04	13-May-2020	13-May-2021

Notes: Tolerance is specified by Customer.

Performed by: Tony Wheaton
Technician
(digitally signed on 22-Jan-2021 12:39 pm)

QA Reviewed by: Slava Peciurov
Lab Manager
(digitally signed on 22-Jan-2021 3:07 pm)

Form: ROC101 Rev 9.3 a

Procedure: Pressure/Vacuum: CAL VER /DHI PPC3 (2.3.A) **FOUND-LEFT (Pass)**

Test Description	True Value	Test Results	Tolerance	Lower Limit	Upper Limit	Status	Uncertainty
VACUUM TEST							
MEASUREMENT UNITS: inHg							
OUT = 4.966 mA							
-28.0000	-28.0000	-28.189	±0.4500	-28.450	-27.550	Pass	3.1e-003
OUT = 7.878 mA							
-22.5000	-22.5000	-22.728	±0.4500	-22.950	-22.050	Pass	3.1e-003
OUT = 11.881 mA							
-15.0000	-15.0000	-15.223	±0.4500	-15.450	-14.550	Pass	3.1e-003
OUT = 15.822 mA							
-7.5000	-7.5000	-7.834	±0.4500	-7.950	-7.050	Pass	3.1e-003
OUT = 19.821 mA							
0.0000	0.0000	-0.335	±0.4500	-0.450	0.450	Pass	3.1e-003
OUT = 15.835 mA							
-7.5000	-7.5000	-7.809	±0.4500	-7.950	-7.050	Pass	3.1e-003
OUT = 11.817 mA							
-15.0000	-15.0000	-15.343	±0.4500	-15.450	-14.550	Pass	3.1e-003
OUT = 7.852 mA							
-22.5000	-22.5000	-22.777	±0.4500	-22.950	-22.050	Pass	3.1e-003
OUT = 4.95 mA							
-28.0000	-28.0000	-28.219	±0.4500	-28.450	-27.550	Pass	3.1e-003

END OF CERTIFICATE

Certificate No: 01037944-1

METTLER TOLEDO

METTLER-TOLEDO, LLC
201 Wolf Dr
Thorofare NJ 08086
1-800-METTLER

NVLAP® CALIBRATION NVLAP LAB CODE 105013-0

ilac-MRA

Mass Calibration Certificate

Customer Information

Customer Name:	Stove Builder International, Inc.	*City:*	
Address:	250 de Copenhauge St.-Augustin-de-Desmaures	*State / Province:*	QC
Purchase Order:	220309982	*Zip / Postal Code:*	G3A 2H3

Measurement and Test Equipment Identification

Serial Number:	B739752165	*Date Received:*	03-OCT-2018
Manufacturer:	Mettler Toledo	*Condition:*	Good
Asset Number:	SBI-312	*Tolerance Class:*	OIML R111 Class E2

Environmental Conditions

Temperature: 21.07 °C *Barometric Pressure:* 769.28 mm Hg *Relative Humidity:* 52 %RH

The standards used to perform this calibration have been compared to reference mass standards that are traceable to the SI through the National Institute of Standards and Technology under Test No 684/289871-17.

The weights calibrated for this report have been calibrated in accordance with the calibration laboratory's process. The calibration performed meets the criteria as described in the current revisions of ASTM E617 and OIML R111. This calibration also meets specifications as outlined in ISO/IEC 17025, ANSI/NCSL Z540-1-1994, and applicable documents.

This certificate may not be partially reproduced, except with prior written permission of the issuing laboratory. This certificate must not be used by the customer to claim product endorsement by NIST, NVLAP, or any other agency of the U.S. government.

Calibration Date:	09-OCT-2018	*Next Calibration Due:*	09-OCT-2023
Calibration Technician:	Robotic Calibration	*Signature:*	Joseph Moran, Metrology Manager Approved Signatory 10-OCT-2018

16280500A

Certificate No: 01037944-1

As Found Data

Nominal Value&Suffix	Serial Number	True Mass (g)	Conv. Mass (g)	Uncertainty (mg, k = 2)	Tolerance (mg)	Density (g/cm³)
200 g	B739752165	200.00009	200.00009	0.06	0.30	8.00

1 As Found / 1 Total

16280500A

Certificate No: 01037944-1

As Left Data

Nominal Value&Suffix	Serial Number	True Mass (g)	Conv. Mass (g)	Uncertainty (mg, k = 2)	Tolerance (mg)	Density (g/cm³)
200 g	B739752165	200.00009	200.00009	0.06	0.30	8.00

1 As Found / 1 Total

16280500A

Certificate No: 01037944-1

Standards and Comparators Used

Nominal Value&Suffix	Serial Number	Standard Set No.	Cal Due	Comparator Used		Cal Due	Procedure Used
200 g	B739752165	MS002	08/01/19	A200XXL	132	01/01/19	Multi A-B

Comments

1 As Found / 1 Total

16280500A

Definitions

Nominal Value - The value as labeled on the weight or defined by shape in accordance with OIML R111 for milligram weights.

True Mass - The mass value of the weight if measured in a vacuum.

Conventional Mass - For a mass at 20 °C, "Conventional Mass" is the mass of a reference standard of density 8000 kg/m³ which it balances in air with a density of 1.2 kg/m³. This value should be referenced when testing the accuracy of a weighing device using any of the nominal values contained in this certificate. The As Found results will equal the As Left in cases where no adjustment or replacement was required.

Uncertainty - All Uncertainty values are reported at approximately 95% confidence level (k=2). The uncertainty value does not include a component for the affects due to magnetism.

Tolerance - The acceptable range of deviation (positive and negative) from the nominal value, including the uncertainty, as defined by ASTM and OIML for the respective classes.

Density - The assumed density of the material used by the manufacturer.

Calibration Process - This calibration was performed in the Level I Mass Metrology Laboratory at 201 Wolf Dr Thorofare, New Jersey 08086 unless otherwise noted in Comments.

OOT - The As Found measurement result combined with the uncertainty exceeded the tolerance for the specified weight class.

A - Weight was adjusted after As Found testing to within the appropriate tolerance class.

R - The received weight was replaced due to an out of tolerance condition and the weight was not adjustable or the weight for this nominal value was missing.

1628C500A

ilac-MRA ACCREDITED A2LA Certificate No. 1750.01 Calibration

Calibration complies with ISO/IEC 17025, ANSI/NCSL Z540-1, and 9001

Cert. No.: 4199-11583105

Traceable® Certificate of Calibration for Dial Barometer

Manufactured for and distributed by : Control Company 12554 Galveston Rd B230, Webster, TX 77598

Instrument Identification: SBI-331

Model: 4199, S/N: 200586704 Manufacturer: Control Company

Standards/Equipment:

Description	Serial Number	Due Date	NIST Traceable Reference
Digital Barometer	D4540001	01 Nov 2020	1000447551

Certificate Information:

Technician: 57 Procedure: CAL-33 Cal Date: 01 Oct 2020 Cal Due Date: 01 Oct 2022

Test Conditions: 44.14%RH 23.01°C 1018mBar

Calibration Data: (New Instrument)

Unit(s)	Nominal	As Found	In Tol	Nominal	As Left	In Tol	Min	Max	±U	TUR
mb/hPa	N.A.	N.A.		960.40	960	Y	955	965	0.62	>4:1
mb/hPa	N.A.	N.A.		985.58	984	Y	981	991	0.62	>4:1
mb/hPa	N.A.	N.A.		1015.85	1015	Y	1011	1021	0.62	>4:1

This certificate indicates Traceability to standards provided by (NIST) National Institute of Standards and Technology and/or a National Standards Laboratory.

A Test Uncertainty Ratio of at least 4:1 is maintained unless otherwise stated and is calculated using the expanded measurement uncertainty. Uncertainty evaluation includes the instrument under test and is calculated in accordance with the ISO "Guide to the Expression of Uncertainty in Measurement : (GUM). The uncertainty represents an expanded uncertainty using a coverage factor k=2 to approximate a 95% confidence level. In tolerance conditions are based on test results falling within specified limits with no reduction by the uncertainty of the measurement. The results contained herein relate only to the item calibrated. This certificate shall not be reproduced except in full, without written approval of Control Company.

Nominal=Standard's Reading; As Left=Instrument's Reading; In Tol=In Tolerance; Min/Max=Acceptance Range; ± U=Expanded Measurement Uncertainty; TUR=Test Uncertainty Ratio; Accuracy=±(Max-Min)/2; Min=As Left Nominal(Rounded) – Tolerance; Max= As Left Nominal(Rounded) + Tolerance;

Nicol Rodriguez

Nicol Rodriguez, Quality Manager

Marisa Elms

Marisa Elms, Technical Manager

Note :

Maintaining Accuracy:

In our opinion once calibrated your Dial Barometer should maintain its accuracy. There is no exact way to determine how long calibration will be maintained. Dial Barometer change little, if any at all, but can be affected by aging, temperature, shock, and contamination.

Recalibration:

For factory calibration and re-certification traceable to National Institute of Standards and Technology contact Control Company.

Issue Date : 01 Oct 2020

CONTROL COMPANY 12554 Galveston RD Suite B230 Webster TX USA 77598
Phone 281 482-1714 Fax 281 482-9448 sales@control3.com www.traceable.com

Control Company is an ISO/IEC 17025:2017 Calibration Laboratory Accredited by (A2LA) American Association for Laboratory Accreditation, Certificate No. 1750.01.
Control Company is ISO 9001:2015 Quality Certified by DNV GL, Certificate No. CERT-01805-2006-AQ-HOU-ANAB.
International Laboratory Accreditation Cooperation - Multilateral Recognition Arrangement (ILAC-MRA).

Traceable® is a registered trademark of Control Company

© 2017 Control Company

Air Liquide creative oxygen | Specialty Gases

Your complete laboratory solution



CERTIFICATE OF ANALYSIS

Customer: SBI FABRICANT DE POELES INTERNATIONAL INC
250 RUE DE COPENHAGUE
SAINT-AUGUSTIN-DE-DESMAURES QC
G3A 2H3

Analysis Date:	8/6/2021 11:41:41AM	**Servitrax barcode No:**	T2L7ER7
Product code:	A1326555	**Work order number:**	1530112
Grade:	CERTIFIED	**Pressure:**	2000 psig
Size:	30AL		
CGA #:	590	**Volume:**	4.53 M3
		Expiry date:	08/06/2024

COMPONENTS	NOMINAL CONCENTRATION	ANALYSIS RESULTS
CARBON DIOXIDE	18.0000 % Molar	18.0 % Molar
CARBON MONOXIDE	4,000.0000 ppm Molar	4252 ppm Molar
OXYGEN	18.0000 % Molar	18.0 % Molar
NITROGEN	BALANCE	BALANCE

Analysis performed by:

Evgeny Makarov

EVGENY MAKAROV - CHEMIST SPG

Verified by:

This Air Liquide Canada mixture is traceable to NIST

METHOD OF ANALYSIS:

Method of analysis is based on principles of gas chromatography and as documented in Air Liquide Canada operating procedure , where applicable, FID, TCD, PDHID, FT-IR, FPD,NO/NOx and SO2 chemiluminescence , hygrometer, and electrochemical cells and paramagnetic cell. Detectors were used in conjunction with packed or capillary columns calibrated flow meters and dilution calibrated system.

ANALYTICAL ACCURACY:

Qualitiy	Concentiration	Blend Tolerance	AA
PRIMARY	5%-50%	+/-1%	+/-1%
	0.5%-5%	+/-2%	
	1ppm-0.5%	+/-5%	
CERTIFIED	5%-50%	+/-5%	+/-2%
	0.5%-5%	+/-10%	+/-2%
	1ppm-0.5%	+/-20%	+/-5%
UNANALYZE	5%-50%	+/-10%	
	<5%	+/-20%	

This mixture was certified by a combination of weight and analysis (depending on component) using scales certified against weights traceable to the Institute for National Measurement Standards (INMS) of the National Research Council of Canada (NRCC), Report # W-021221-13857(MTL) and CA3033-022-050621-ACC (Calgary) or calibration standards prepared in that manner.

How to contact us & order

E-mail within your region: specgas.atlantic@airliquide.com specgas.on@airliquide.com specgas.midwest@airliquide.com specgas.qc@airliquide.com specgas.ab@airliquide.com specgas.pacific@airliquide.com

Customer Solution Center: 1 800 217-2688 Online 24/7 through My.Airliquide.ca Air Liquide Mobile App

Air Liquide creative oxygen | Specialty Gases

Your complete laboratory solution



CERTIFICATE OF ANALYSIS

Customer: SBI FABRICANT DE POELES
INTERNATIONAL INC
250 RUE DE COPENHAGUE
SAINT-AUGUSTIN-DE-DESMAURES QC
G3A 2H3

Analysis Date:	8/3/2021 4:48:08PM	**Servitrax barcode No:**	T267TH8
Product code:	A1326591	**Work order number:**	1530113
Grade:	CERTIFIED	**Pressure:**	1450 psig
Size:	30AL		
CGA #:	590	**Volume:**	4.32 M3
		Expiry date:	08/03/2024

COMPONENTS	NOMINAL CONCENTRATION	ANALYSIS RESULTS
CARBON DIOXIDE	10.0000 % Molar	10.1 % Molar
CARBON MONOXIDE	2.0000 % Molar	1.98 % Molar
OXYGEN	8.0000 % Molar	7.99 % Molar
NITROGEN	BALANCE	BALANCE

Analysis performed by:

Eugeny Makarov
EVGENY MAKAROV - CHEMIST SPC

Verified by:

RL

This Air Liquide Canada mixture is traceable to NIST

METHOD OF ANALYSIS:

Method of analysis is based on principles of gas chromatography and as documented in Air Liquide Canada operating procedure , where applicable, FID, TCD, PDHID, FT-IR, FPD-NO/NOx and SO2 chemiluminescence , hygrometer, and electrochemical cells and paramagnetic cell. Detectors were used in conjunction with packed or capillary columns calibrated flow meters and dilution calibrated system.

ANALYTICAL ACCURACY:

Qualitiy	Concentiration	Blend Tolerance	AA
PRIMARY	5%-50%	+/-1%	+/-1%
	0.5%-5%	+/-2%	
	1ppm-0.5%	+/-5%	
CERTIFIED	5%-50%	+/-5%	+/-2%
	0.5%-5%	+/-10%	+/-2%
	1ppm-0.5%	+/-20%	+/-5%
UNANALYZE	5%-50%	+/-10%	
	<5%	+/-20%	

This mixture was certified by a combination of weight and analysis (depending on component) using scales certified against weights traceable to the Institute for National Measurement Standards (INMS) of the National Research Council of Canada (NRCC), Report # W-021221-13857(MTL) and CA3033-022-050621-ACC (Calgary) or calibration standards prepared in that manner.

How to contact us & order

E-mail within your region: specgas.atlantic@airliquide.com specgas.on@airliquide.com specgas.midwest@airliquide.com
specgas.qc@airliquide.com specgas.ab@airliquide.com specgas.pacific@airliquide.com

Online 24/7 at MyAirliquide.ca Air Liquide Mobile App

VENTIS®

EPA ≤2.5 g/h

Safety tested according to ULC S610, UL 127 standards by an accredited laboratory.

US Environmental Protection Agency phase II certified wood fireplace compliant with 2020 cord wood standard.

Installation and Operation Manual

HE250R

(VB00015 model)

ENGLISH

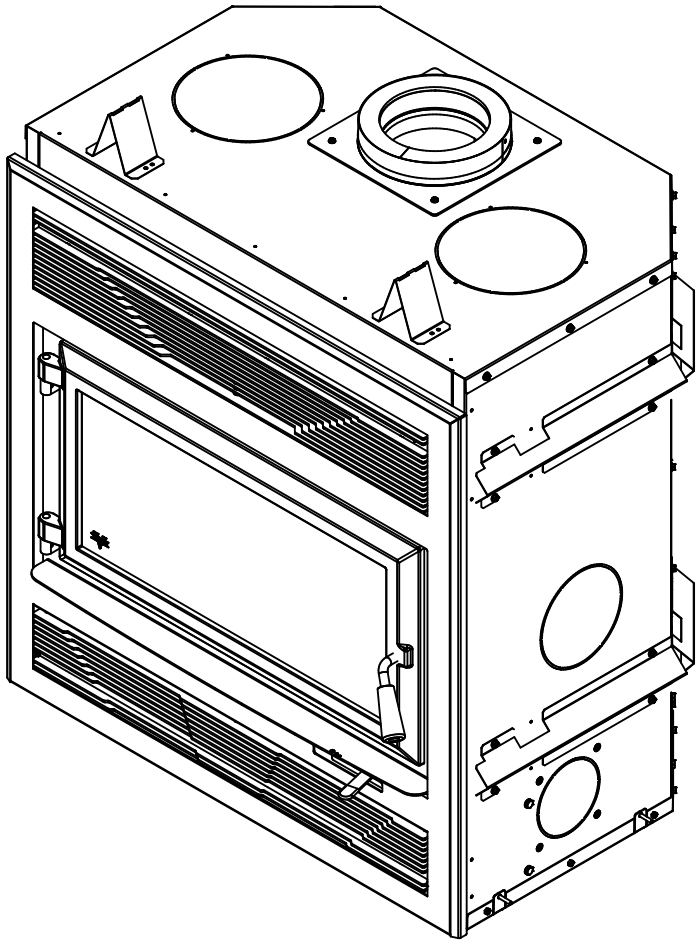

CONTACT LOCAL BUILDING OR FIRE OFFICIALS ABOUT RESTRICTIONS AND INSTALLATION INSPECTION REQUIREMENTS IN LOCAL AREA.

READ THIS ENTIRE MANUAL BEFORE INSTALLATION AND USE OF THIS WOOD FIREPLACE. FAILURE TO FOLLOW THESE INSTRUCTIONS COULD RESULT IN PROPERTY DAMAGE, BODILY INJURY OR EVEN DEATH.

READ AND KEEP THIS MANUAL FOR REFERENCE

Printed in Canada

46162A
2022-08-16

THANK YOU FOR CHOOSING THIS WOOD FIREPLACE

If this fireplace is not installed properly, combustible materials near it may overheat and catch fire.

To reduce the risk of fire, follow the installation instructions in this manual.

As one of North America's largest and most respected wood stove and fireplace manufacturers, Stove Builder International takes pride in the quality and performance of all its products.

The following pages provide general advice on wood heating, detailed instructions for safe and effective installation, and guidance on how to get the best performance from this fireplace.

It is highly recommended that this wood burning hearth product be installed and serviced by professionals who are certified by a «Qualified Agency» such as NFI (National Fireplace Institute®) or CSIA (Chimney Safety Institute of America) in the United States and in Canada by WETT (Wood Energy Technology Transfer) or in Quebec by APC (Association des Professionnels du Chauffage).

Contact local building or fire officials about restrictions and installation inspection requirements in your local area.

A building permit might be required for the installation of this fireplace and the chimney that it is connected to. It is also highly recommended to inform your home insurance company.

Please read this entire manual before installing and using this fireplace.

A primary alternative heat source should be available in the home. This heating unit may serve as a supplementary heat source. The manufacturer cannot be responsible for additional heating costs associated with the use of an alternative heat source.

ENGLISH

ONLINE WARRANTY REGISTRATION

If the unit requires repairs during the warranty period, proof of purchase must be provided. The purchase invoice must be kept. The date indicated on it establishes the warranty period. If it cannot be provided, the warranty period will be determined by the date of manufacture of the product. It is also highly recommended to register the warranty online at

http://www.occanada.com/en/service-support/warranty/warranty-registration

Registering the warranty will help to quickly find the information needed on the unit.

TABLE OF CONTENTS

PART A - OPERATION AND MAINTENANCE 7

1. Safety Information 7

2. General Information 8

2.1 Performances 8
2.2 Specifications 9
2.3 Dimensions 10
2.4 EPA Certification Loading 13
2.5 Materials 14
2.6 Zone Heating 14
2.7 Emissions and Efficiency 15

3. Fuel 15

3.1 Tree Species 15
3.2 Log Length 16
3.3 Piece Size 16
3.4 Compressed Wood Logs 16
3.5 Drying Time 17

4. Operating the Fireplace 18

4.1 Using a Fire Screen 18
4.2 Blower Operation 18

5. Burning Wood Efficiently 19

5.1 First Use 19
5.2 Lighting Fires 19
5.3 Combustion Cycles 21
5.4 Rekindling a Fire 22
5.5 Removing Ashes 22
5.6 Air Intake Control 23
5.7 Fire Types 23

6. Maintenance 25

6.1 Cleaning and Painting 25
6.2 Refractory Material and Baffle 25
6.3 Glass Door 25
6.4 Door 27
6.5 Exhaust System 29

PART B – INSTALLATION 30

7. Safety Information and Standards 31

7.1 Safety 31
7.2 Standards 31

8. Fireplace Installation 32

8.1 Standoff installation 32
8.2 Carrying Handles 32
8.3 Location 32
8.4 Clearances to combustibles 32
8.5 Framing construction 33

ENGLISH

8.6 Hearth Extension Construction 37
8.7 Facing 40
8.8 Combustible Shelf Installation 40
8.9 Heat Shield for Combustible Shelf 41
8.10 Non combustible Shelf Installation 41
9. The Venting System 41
9.1 Location 41
9.2 Supply of Combustion Air 42
9.3 Chimney Installation 42
9.4 Angled Wall Pass-Thru Installation 47
9.5 Chimney Support Installation 48
9.6 Approved Chimneys 48
Appendix 1: Faceplate and Louvers Installation 50
Appendix 2: Optional Fresh Air Intake Installation 51
Appendix 3: Optional Traditional Gravity Hot Air Distribution Kit Installation 54
Appendix 4: Optional Modern Gravity Hot Air Distribution Kit Installation 58
Appendix 5: Optional Forced Air Distribution Kit Installation 63
Appendix 6: Optional Fire Screen Installation 64
Appendix 7: Refractory Panels Replacement 65
Appendix 9: Blower Replacement 67
Appendix 10: Exploded Diagram and Parts List 69
VENTIS Limited Lifetime Warranty 72

ENGLISH

Dealer: _____

_____

Installer: _____

_____

Phone Number: _____

Serial Number: _____

CERTIFICATION PLATE

ENGLISH

REFER TO INTERTEK'S DIRECTORY OF BUILDING PRODUCTS FOR DETAILED INFORMATION
SE RÉFÉRER AU RÉPERTOIRE DES PRODUITS HOMOLOGUÉS D'INTERTEK POUR PLUS D'INFORMATION

LISTED FACTORY BUILT FIREPLACE
FOYER PRÉFABRIQUÉ HOMOLOGUÉ

Intertek

STANDARDS / NORMES D'ESSAI:
Certified to / Certifié selon ULC S610
Certified to / Certifié selon UL 127
Certified to / Certifié selon CSA b415.1-10
Certified to/Certifié selon ASTM E2515-11 (R2017)
Certified to/Certifié selon ASTM E3053-17
(April / Avril 2019)
Control number: 4002461

MODEL / MODÈLE:
HE250R

FOR USE WITH WOOD ONLY — POUR UTILISATION AVEC BOIS SEULEMENT

CONTACT LOCAL BUILDING OFFICIALS ABOUT THE RESTRICTIONS AND INSTALLATION INSPECTION IN YOUR AREA.
COMMUNIQUER AVEC LES AUTORITÉS LOCALES DU BÂTIMENT ET DE LA PRÉVENTION DES INCENDIES AU SUJET DES RESTRICTIONS D'INSTALLATION DANS VOTRE SECTEUR.

Serial Number / No. de Série: 1

INSTALL AND USE ONLY IN ACCORDANCE WITH SBI STOVE BUILDER INTERNATIONAL INSTALLATION AND OPERATION INSTRUCTIONS.
L'INSTALLATION ET L'OPERATION DOIT SE FAIRE SELON LES INSTRUCTIONS D'INSTALLATION ET D'UTILISATION DE SBI FABRICANT DE POÊLES INTERNATIONAL.

PREVENT HOUSE FIRES

- Use solid wood fuel only.

For safety, keep doors tightly closed.

- Do not overfire unit.
- Replace with only ceramic glass 5mm thick.
- Use only with listed factory-built chimney as per manufacturer's instructions.
- A non-combustible hearth extension must be installed in front of unit extending 16 in (406 mm) in front and 8 in (203 mm) on each side of door opening.
- Do not use a fireplace insert or other products not specified for use with this product.

WARNING: This fireplace has not been tested with an unvented gas log set. To reduce risk of fire or injury, do not install an unvented gas log set into fireplace.
Areas of the fireplace incorporating warm or cold air ducts shall be enclosed in accordance with manufacturer's instructions.

- This wood heater needs periodic inspection and repair for proper operation. Consult the owner's manual for further information. It is against US federal regulations to operate this wood heater in a manner inconsistent with the operating instructions in the owner's manual.

PRÉVENEZ LES INCENDIES

- Utiliser uniquement du bois de chauffage.

Pour votre sécurité, maintenir les portes fermées de façon étanche.

- Ne pas surchauffer le foyer.
- Remplacer la vitre seulement avec un verre céramique de 5mm d'épaisseur.
- Pour utilisation seulement avec une cheminée préfabriquée homologuée tel que spécifié selon les instructions du manufacturier.
- Une protection de plancher incombustible doit être installée à l'avant du foyer excédant de 16 po (406 mm) à l'avant et 8 po (203 mm) de chaque côté de l'ouverture de porte.
- Ne pas utiliser de foyer encastrable ou autres produits qui ne sont pas conçus précisément pour être utilisés avec le présent foyer.

ATTENTION: Ce foyer n'a pas été mis à l'essai avec un ensemble de bûches décoratives à gaz non ventilé. Pour réduire les risques de feu ou de blessures, ne pas installer d'ensemble de bûches décoratives à gaz non ventilé dans ce foyer.
Les zones du foyer intégrant des conduits d'air chaud ou froid doivent être installées en accord avec les instructions du manufacturier.

- Cet appareil de chauffage requiert des inspections et réparations périodiques. Consulter le manuel de l'utilisateur pour plus d'information. Opérer cet appareil de chauffage de façon inconsistente par rapport au manuel de l'utilisateur consiste une violation de la loi fédérale (USA).

MINIMUM CLEARANCES TO COMBUSTIBLE MATERIALS /
DÉGAGEMENTS MINIMUM AUX MATÉRIAUX COMBUSTIBLES

Sidewall / Mur latéral [1] :	13 in (330 mm)	Side facing / Parement latéral [2] :	4 in (102 mm)
Combustible shelf (from floor) / Tablette combustible (du sol) [2][3] :	58 in (1473 mm)	Ceiling (from floor) / Plafond (à partir du plancher) [3] :	80 in. (2032 mm)

[1] From door opening. / À partir de l'ouverture de la porte.
[2] Subject to a maximum protrusion (consult owner's manual). / Sujet à une saillie maximale (consultez le manuel d'instructions).
[3] If the fireplace is elevated, the clearances to the combustible shelf and ceiling must be increased by an equivalent value. / Si le foyer est surélevé, les dégagements à la tablette combustible et au plafond doivent être augmentés d'une valeur équivalente.

Blower / Ventilateur: (115V, 0.8A, 60Hz)

PROCEDURE TO FOLLOW IN CASE OF RUN-AWAY FIRE	EN CAS D'INCENDIE DE CHEMINÉE
1) Keep doors closed	1) Maintenir les portes fermées
2) Close all combustion air controls	2) Fermer tous les dispositifs d'admission d'air

U.S. ENVIRONMENTAL PROTECTION AGENCY Certified to comply with 2020 particulate emission standards using cord wood.
AGENCE DE PROTECTION DE L'ENVIRONNEMENT DES É.U. (EPA). Conforme aux normes d'émission de particules de 2020 avec bûche de bois.
Weighted average emission rate / Moyenne pondérée des émissions: 1.2 g/h
When tested in accordance with / Lorsque testé selon: ASTM E2515
Tested and certified in compliance with CFR 40 part 60, subpart AAA, section 60.534(a)(1(ii)) and ASTM 3053-17

WARNING: This product can expose you to carbon monoxide, which is known to the State of California to cause cancer, birth defects or other reproductive harm. (For more information go to www.p65warnings.ca.gov)

CAUTION



- HOT WHILE IN OPERATION.
- DO NOT TOUCH. KEEP CHILDREN, CLOTHING AND FURNITURE AWAY.
- CONTACT MAY CAUSE SKIN BURNS. SEE NAME-PLATE AND INSTRUCTIONS.
- THIS FIREPLACE NEEDS AIR FOR GOOD OPERATION.
- WHEN A FIRE IS BURNING IN THE FIREPLACE, FRESH AIR MUST BE SUPPLIED TO THE ROOM WHERE THE FIREPLACE IS LOCATED, FAILURE TO PROVIDE THIS MAY STARVE OTHER FUEL BURNING APPLIANCE FROM AN ADEQUATE AIR SUPPLY.

ATTENTION

- CHAUD EN FONCTIONNEMENT.
- NE PAS TOUCHER. GARDER LES ENFANTS, LES VÊTEMENTS ET LES MEUBLES ÉLOIGNÉS.
- UN CONTACT AVEC LA PEAU PEUT OCCASIONNER DES BRÛLURES. VOIR LES INSTRUCTIONS.
- CE FOYER A BESOIN D'AIR POUR SON BON FONCTIONNEMENT.
- LORSQUE LE FOYER BRÛLE, UN APPORT D'AIR SUPPLÉMENTAIRE DOIT ÊTRE PRÉVU DANS LA PIÈCE, UN MANQUE D'AIR D'APPOINT POURRAIT PRIVER LES AUTRES APPAREILS DE COMBUSTION D'UNE ALIMENTATION D'AIR ADÉQUATE.

Made in La Guadeloupe (Qc), Canada
23/11/2021 (# test)

VENTIS

Fabriqué à La Guadeloupe (Qc), Canada
23/11/2021 (# test)
R2775

PART A - OPERATION AND MAINTENANCE

1. Safety Information

- This fireplace has been tested for use with an open door in conjunction with a fire screen, sold separately. The door may be opened, or fire screen removed only during lighting procedures or reloading. Always close the door or put back on the fire screen after ignition. Do not leave the fireplace unattended when the door is opened with or without a fire screen.
- **WARNING : OPERATE ONLY WITH THE DOOR FULLY CLOSED OR FULLY OPEN WITH THE FIRE SCREEN IN PLACE. IF THE DOOR IS LEFT PARTLY OPEN, GAS AND FLAME MAY BE DRAWN OUT OF THE OPENING, CREATING RISKS FROM BOTH FIRE AND SMOKE.**
- **HOT WHILE IN OPERATION. KEEP CHILDREN, CLOTHING AND FURNITURE AWAY. CONTACT MAY CAUSE SKIN BURNS. GLOVES MAY BE NEEDED FOR THE FIREPLACE OPERATION.**
- Using a fireplace with cracked or broken components, such as glass, firebricks or baffle may produce an unsafe condition and may damage the fireplace.
- **NEVER USE GASOLINE, LANTERN FUEL (NAPHTHA), FUEL OIL, MOTOR OIL, KEROSENE, CHARCOAL LIGHTER FLUID, OR SIMILAR LIQUIDS OR AEROSOLS TO START A FIRE IN THIS FIREPLACE. KEEP ALL SUCH LIQUIDS OR AEROSOLS WELL AWAY FROM THE FIREPLACE WHILE IT IS IN USE.**
- Do not store fuel within heater minimum installation clearances.
- Burn only seasoned natural firewood.
- This wood heater needs periodic inspection and repairs for the proper operation. It is against federal regulations to operate this wood heater in a manner inconsistent with operating instructions in this manual.
- Do not obstruct air inlets. This fireplace needs air for its good operation.
- Do not block the hot air vents of the fireplace as this will cause the fireplace to overheat.
- A smoke detector, a carbon monoxide detector and a fire extinguisher should be installed in the house. Location of detectors should be chosen wisely to avoid false alarm when reloading the appliance. The location of the fire extinguisher should be known by all family members.
- Do not use makeshift materials or make any compromises when installing this fireplace.
- Mixing of appliance components from different sources or modifying components is prohibited and will void the warranty. Any modification of the fireplace that has not been approved in writing by the testing authority is prohibited and violates CSA B365 and NFPA 211 standards.
- The manufacturer grants no warranty, implied or stated, for the poor installation or lack of maintenance of this fireplace and assumes no responsibility for any consequential damages.
- Do not elevate the fire by means of grates, chenets, andirons or any other means.



WARNING This product can expose you to chemicals including carbon monoxide, which is known to the State of California to cause cancer, birth defects or other reproductive harm. For more information go to www.P65warnings.ca.gov/

2. General Information

2.1 Performances

Values are as measured per test method, except for the recommended heating area, firebox volume, maximum burn time and maximum heat output.

Model	HE250R	
Fuel Type	Dry Cordwood	
Combustion Technology	Non-Catalytic	
Recommended heating area (sq. ft.)[1]	750 to 2,200 ft^2 (69 to 204 m^2)	
Overall firebox volume[2]	2.5 ft^3 (0.071 m^3)	
EPA loading volume	1.94 ft^3 (0.055 m^3)	
Maximum burn time[1]	8 hours	
Maximum heat output (dry cordwood)[3]	80,000 BTU/h (23.4 kW)	
Overall heat output rate (min. to max.)[2 4]	12,700 BTU/h to 60,700 BTU/h (3.72 kW to 17.79 kW)	
Average overall efficiency[3] Dry cordwood	64 % (HHV)[5]	68 % (LHV)[6]
Optimum overall efficiency[7]	70 %	
Optimum heat transfer efficiency[8]	68 %	
Average particulate emissions rate[9]	1.2 g/h (EPA / CSA B415.1-10)[10]	
Average CO[11]	98 g/h	

[1] Recommended heating area and maximum burn time may vary subject to location in home, chimney draft,heat loss factors, climate, fuel type and other variables. The recommended heated area for a given appliance is defined by the manufacturer as its capacity to maintain a minimum acceptable temperature in the designated area in case of a power failure.

[2] The overall firebox calculation is an approximation and is not intended to be used for loading. This volume includes a buffer zone to allow an easier fuel insertion, prevent ash spillage and allow the air wash to work properly.

[3] The maximum heat output (dry cordwood) is based on a loading density varying between 15 lb/ft^3 and 20 lb/ft^3. Other performances are based on a fuel load prescribed by the standard. The specified loading density varies between 7 lb/ft^3 and 12 lb/ft^3. The moisture content is between 19% and 25%.

[4] As measured per CSA B415.1-10 stack loss method.

[5] Higher Heating Value of the fuel.

[6] Lower Heating Value of the fuel.

[7] Optimum overall efficiency at a specific burn rate (LHV).

[8] The optimum heat transfer efficiency is for the low burn rate and represents the appliance's ability to convert the energy contained in the wood logs into energy transferred to the room in the form of heat and does not take into account the chemical losses during combustion.

[9] This appliance is officially tested and certified by an independent agency.

[10] Tested and certified in compliance with CFR 40 part 60, subpart AAA, section 60.534(a)(1(ii) and ASTM E3053-17.

[11] Carbon monoxide.

2.2 Specifications

Recommended log length	16 in (406 mm) east-west
Maximum log length[12]	20 in (508 mm) east-west
Flue outlet diameter	6 in (150 mm)
Recommended connector pipe diameter	6 in (150 mm)
Type of chimney	CAN/ULC S629, UL 103 HT (2100 °F)
Baffle material	C-Cast or equivalent
Approved for mobile home installation[13]	No
Type of door	Simple, glass with steel frame
Type of glass	Ceramic glass
Blower	Included (up to 176 CFM)
Particulate emission standard[14]	EPA / CSA B415.1-10
USA standard (Safety)	UL 127
Canada standard (Safety)	ULC S610

[12] North-south: ends of the logs visible, East-west: sides of the logs visible.

[13] Mobile homes (Canada) or manufactured homes (USA): The US Department of Housing and Urban Development describes “manufactured homes” better known as “mobile homes” as follows; buildings built on fixed wheels and those transported on temporary wheels/axles and set on a permanent foundation. In Canada, a mobile home is a dwelling for which the manufacture and assembly of each component is completed or substantially completed prior to being moved to a site for installation on a foundation and connection to service facilities and which conforms to the CAN/CSA-Z240 MH standard.

[14] Tested and certified in compliance with CFR 40 part 60, subpart AAA, section 60.534(a)(1(ii) and ASTM E3053-17.

2.3 Dimensions

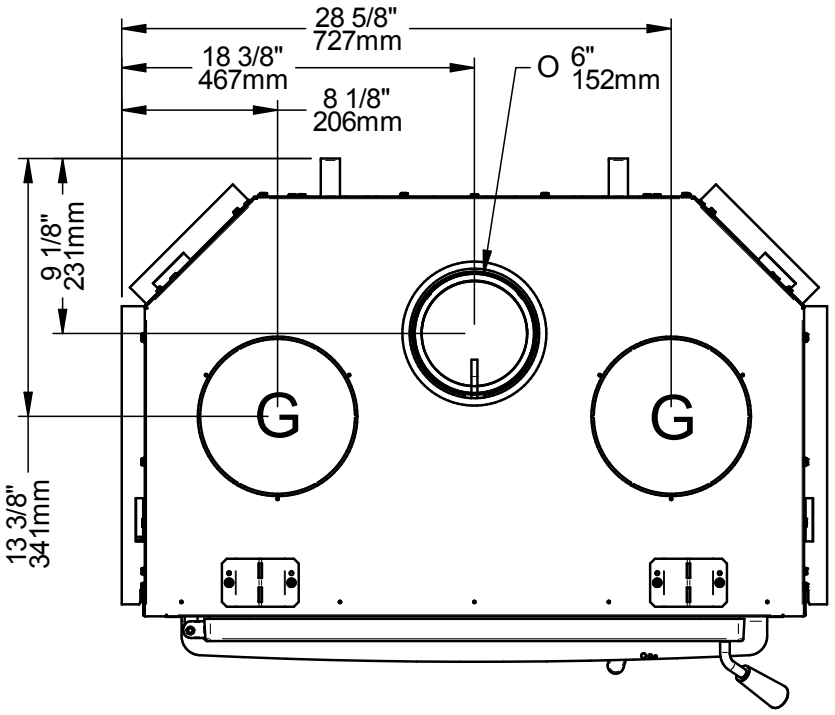

Top view

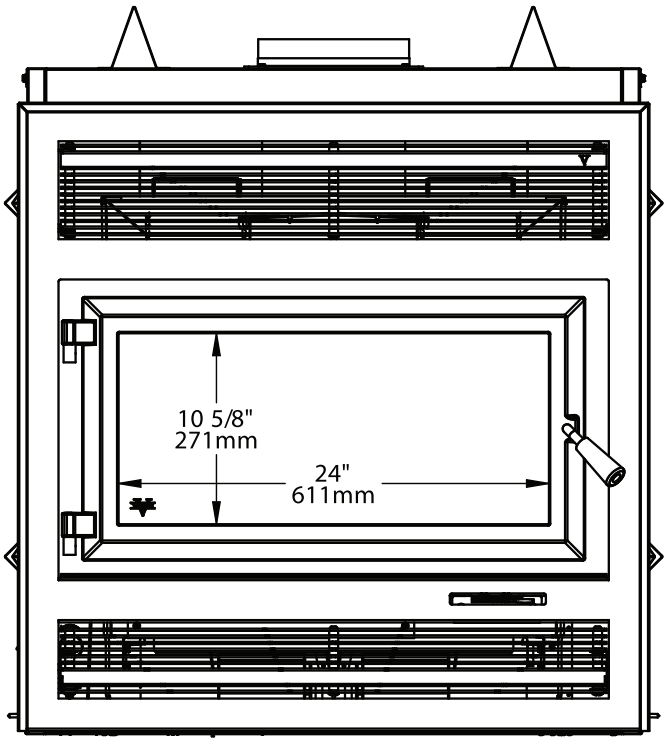

Front view

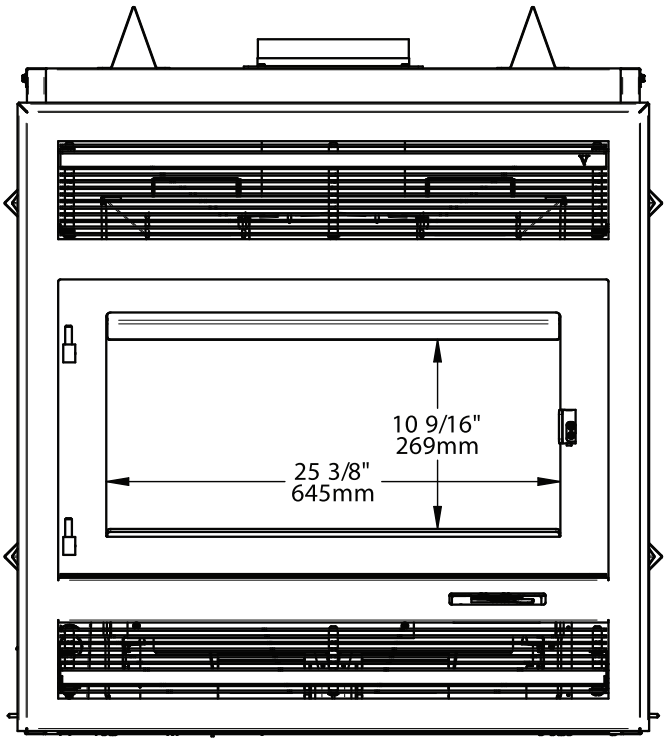

Front view - Door opening

G : Opening for gravity hot air distribution kit (ø 8").

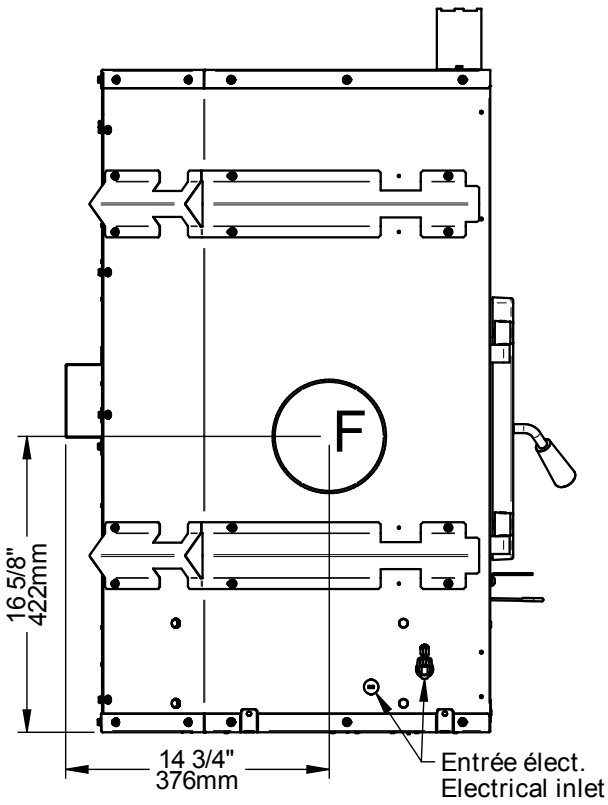

Left side view

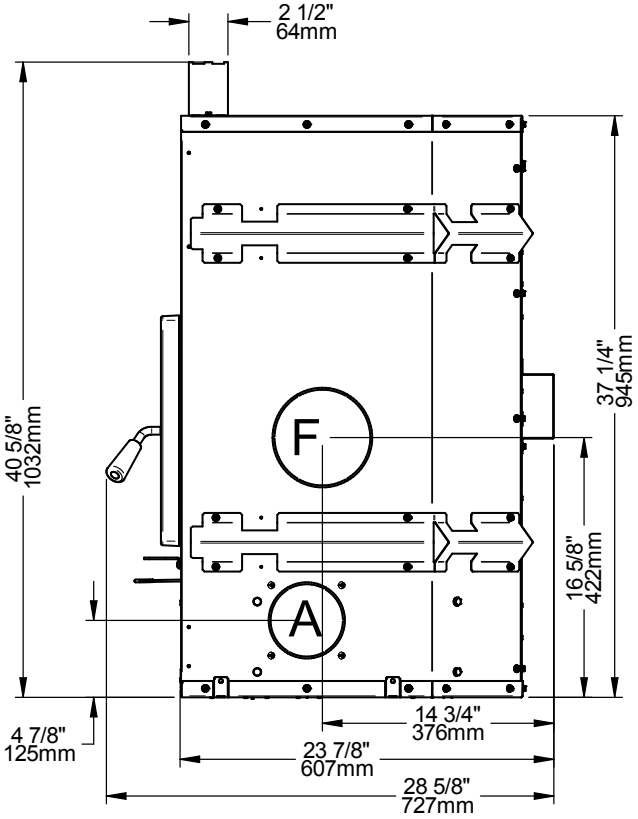

Right side view

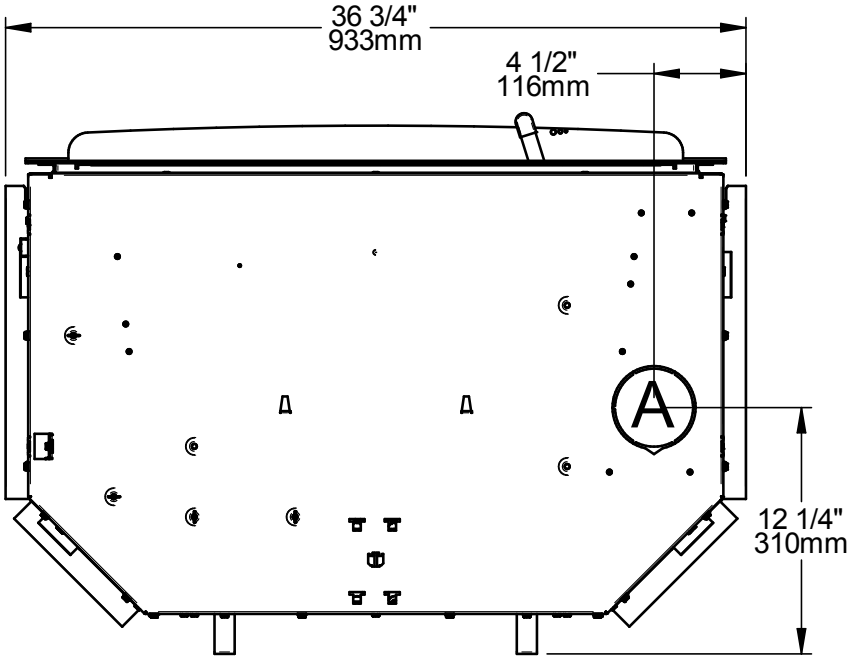

Bottom view

F : Opening for forced air distribution kit (ø 6").

A : Opening for fresh air intake (ø 4").

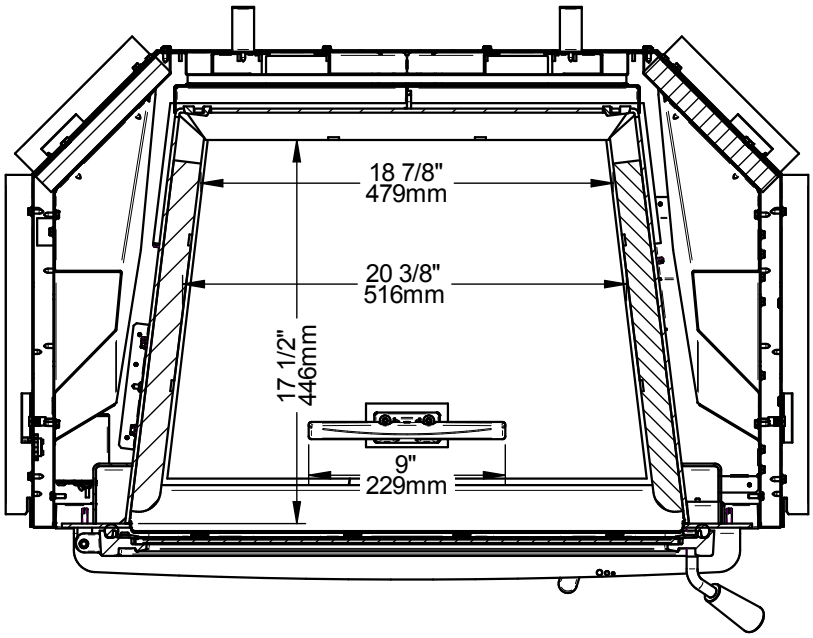

Combustion chamber - Top view

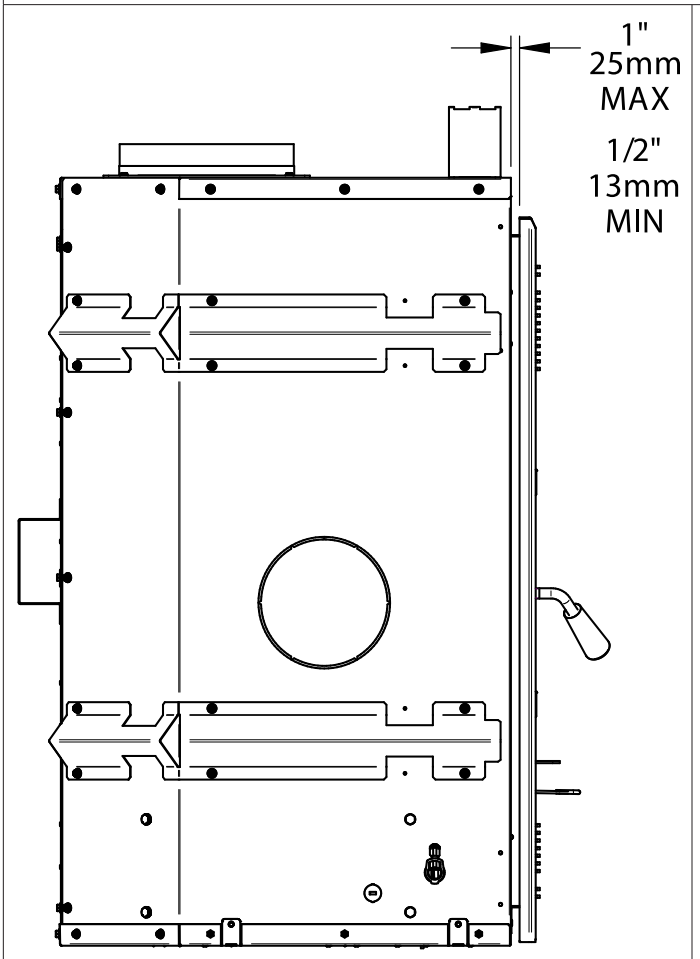

Left view - Faceplate projection

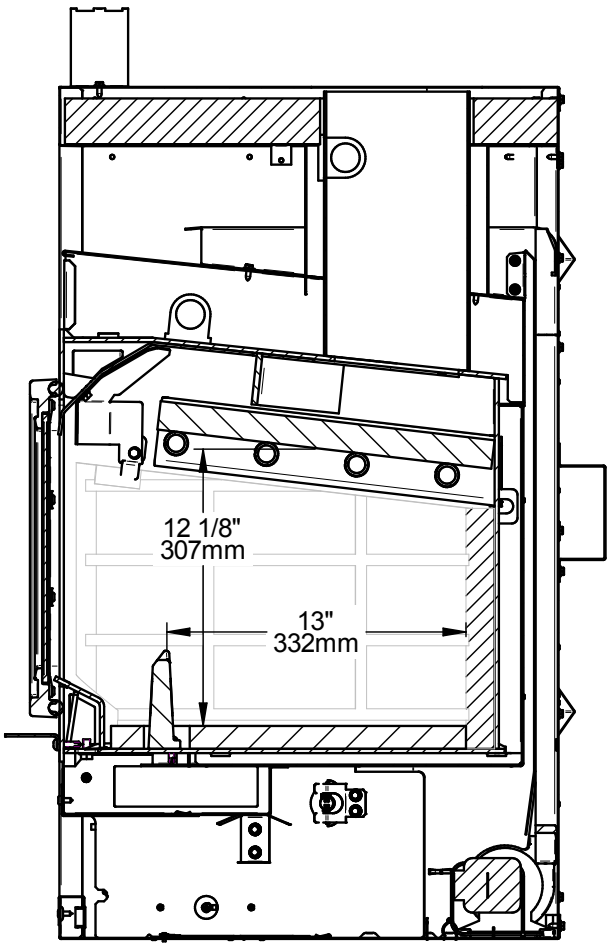

Combustion chamber - Side view

2.4 EPA Certification Loading

The loading methods shown below are those used during emissions certification.

2.4.1 Air control

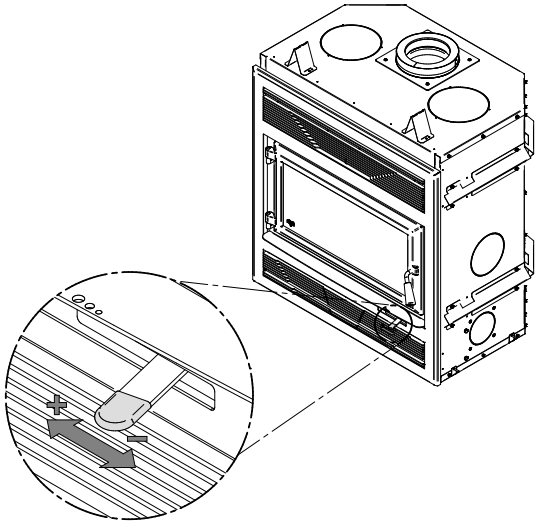

The air control is located below the ash shelf on the right. To open the air control, push the air control handle completely to the left (High). This will increase the burn rate. To close the air control, push the air control handle completely to the right (Low). This will decrease the burn rate.

2.4.2 High burn rate (primary air control open)

Open the air control completely. Criss cross 10 small pieces (2”x2”) of wood into the firebox in 3 layers (2 at the bottom, 4 in the middle and 4 on top). Criss cross 10 to 12 finely split kindling wood pieces over the small pieces of wood. Tie knot with five sheets of paper and place them on top of the kindling wood. Light up the paper and let the door completely open until the 2 top layers are burning. Close the door. When the kindling and the small pieces of wood are almost completely burnt out and it is possible to break them into small pieces, level the coal bed and put 5 logs in the firebox. Place 2 small pieces (about 3” x 3”) in the bottom in a reverse V shape, then put two medium size pieces (about 4”x4”) in an East-West orientation in the back (over the reverse V). Put a big piece (about 5”x5”) in the front over the reverse V. Try to leave air space between the pieces. Let the door fully open for 3 minutes or when the fire is fully established and close the door. Leave the air control fully opened.

2.4.3 Medium and low burn rate

On a 2” coal bed that is dark red, add 6 pieces of wood in the firebox. Place 2 small pieces (about 2.5” x 2.5”) in the bottom in a reverse V shape, then put 2 medium size pieces (about 4”x4”) in an East-West orientation in the back (over the reverse V). Put a big piece (about 5”x5”) in an East-West orientation in the front (over the reverse V) and put a last medium size piece (about 4”x4”) over the two medium size pieces in the back. Try to leave air space between the pieces. Let the door open at 90° for 3 minutes 30 seconds or when the fire is fully established and close the door. Leave the primary air control open for approximately 5 minutes and then close the primary air control halfway. After another 5 minutes, close the air control completely for the low burn rate and 3/8” open for the medium burn rate.

2.5 Materials

The **body** of this fireplace, which is most of its weight, is carbon steel. Should it ever become necessary many years in the future, almost the entire fireplace can be recycled into new products, thus eliminating the need to mine new materials.

The **paint** coating on the fireplace is very thin. Its VOC content (Volatile Organic Compounds) is very low. VOCs can be responsible for smog, so all the paint used during the manufacturing process meets the latest air quality requirements regarding VOC reduction or elimination.

The **air tubes** are stainless steel, which can also be recycled.

The **baffle** is made of aluminosilicate fibre material that is compressed with a binder to form a rigid board. C-Cast can withstand temperatures above 2,000 °F. It is not considered hazardous waste. Disposal at a waste management center is recommended.

Moulded **refractory panels** are mainly composed of silicon dioxide, also known as silica, a product processed from a mined mineral. It is most commonly found in nature in the form of sand and clay. Disposal at a waste management center is recommended. The steel mesh contained in some refractory bricks can also be recycled.

The door and glass **gaskets** are fibreglass which is spun from melted sand. Black gaskets have been dipped into a solvent-free solution. Disposal at a waste management center is recommended.

The door **glass** is a 5/32" (4 mm) thick ceramic material that contains no toxic chemicals. It is made of natural raw materials such as sand and quartz that are combined in such a way to form a high temperature glass. Ceramic glass cannot be recycled in the same way as normal glass, so it should not be disposed of with regular household products. Disposal at a waste management center is recommended.

2.6 Zone Heating

This fireplace is a space heater, which means it is intended to heat the area it is installed in, as well as spaces that connect to that area, although to a lower temperature. This is called zone heating and it is an increasingly popular way to heat homes or spaces within homes. Zone heating can be used to supplement another heating system by heating a particular space within a home, such as a basement, a family room or an addition that lacks another heat source.

Houses of moderate size and relatively new construction can be heated with a properly sized and located wood fireplace. Whole house zone heating works best when the fireplace is in the part of the house where the family spends most of its time. This is normally the main living area where the kitchen, dining and living rooms are located.

Locating the fireplace in this area will give the maximum benefit of the heat it produces and will achieve the highest possible heating efficiency and comfort. The space where the most time is spent will be warmest, while bedrooms and basement (if there is one) will stay cooler. In this way, less wood is burnt than with other forms of heating.

Although the fireplace may be able to heat the main living areas of the house to an adequate temperature, it is strongly recommended to also have a conventional oil, gas or electric heating system to provide backup heating.

The success of zone heating will depend on several factors, including the correct sizing and location of the fireplace, the size, layout and age of your home and your climate zone. Three-season vacation homes can usually be heated with smaller fireplaces than houses that are heated all winter.

2.7 Emissions and Efficiency

The low smoke emissions produced by the special features inside this fireplace firebox mean that the household will release up to 90% less smoke into the outside environment than if an older conventional fireplace was used. But there is more to the emission control technologies than protecting the environment.

The smoke released from wood when it is heated contains about half of the energy content of the fuel. By burning the wood completely, this fireplace releases all the heat energy from the wood instead of wasting it as smoke up the chimney. Also, the features inside the firebox allow control of the air supply meaning controlling the heat output, while maintaining clean and efficient flaming combustion, which boosts the efficient delivery of heat to the home.

The emission control and advanced combustion features of this fireplace can only work properly if the fuel used is in the correct moisture content range of 15% to 20%. Refer to the following section of suggestions on preparing fuelwood and judging its moisture.

3. Fuel

Good firewood has been cut to the correct length for the fireplace, split to a range of sizes and stacked in the open until its moisture content is down to 15% to 20%.

DO NOT BURN:

- **GARBAGE;**
- **LAWN CLIPPINGS OR YARD WASTE;**
- **MATERIALS CONTAINING RUBBER, INCLUDING TIRES;**
- **MATERIALS CONTAINING PLASTIC;**
- **WASTE PETROLEUM PRODUCTS, PAINTS OR PAINT THINNERS, OR ASPHALT PRODUCTS;**
- **MATERIALS CONTAINING ASBESTOS;**
- **CONSTRUCTION OR DEMOLITION DEBRIS;**
- **RAILROAD TIES OR PRESSURE-TREATED WOOD;**
- **MANURE OR ANIMAL REMAINS;**
- **SALT WATER DRIFTWOOD OR OTHER PREVIOUSLY SALT WATER SATURATED MATERIALS;**
- **UNSEASONED WOOD; OR**
- **PAPER PRODUCTS, CARDBOARD, PLYWOOD, OR PARTICLE BOARD. THE PROHIBITION AGAINST BURNING THESE MATERIALS DOES NOT PROHIBIT THE USE OF FIRE STARTERS MADE FROM PAPER, CARDBOARD, SAW DUST, WAX AND SIMILAR SUBSTANCES FOR THE PURPOSE OF STARTING A FIRE IN AN AFFECTED WOOD HEATER.**

BURNING THESE MATERIALS MAY RESULT IN THE RELEASE OF TOXIC FUMES OR RENDER THE HEATER INEFFECTIVE AND CAUSE SMOKE.

3.1 Tree Species

The tree species the firewood is produced from is less important than its moisture content. The main difference in firewood from various tree species is the density of the wood. Hardwoods are denser than softwoods.

Homeowners with access to both hardwood and softwood use both types for different purposes. Softer woods make good fuel for mild weather in spring and fall because they light quickly and produce less heat.

Softwoods are not as dense as hardwoods so a given volume of wood contains less energy. Using softwoods avoids overheating the house, which can be a common problem with wood heating in moderate weather. Harder woods are best for colder winter weather when more heat and longer burn cycles are desirable.

Hardwood trees like oak, maple, ash and beech are slower growing and longer lived than softer woods like poplar and birch. That makes hardwood trees more valuable. The advice that only hardwoods are good to burn is outdated. Old, leaky cast iron fireplaces wouldn't hold a fire overnight unless they were fed large pieces of hardwood.

3.2 Log Length

Logs should be cut at least 1" (25 mm) shorter than the firebox so they fit in easily. Pieces that are even slightly too long makes loading the fireplace very difficult. The most common standard length of firewood is 16" (400 mm).

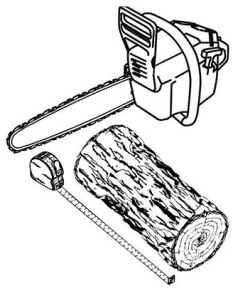

3.3 Piece Size

Firewood dries more quickly when it is split. Large unsplit rounds can take years to dry enough to burn. Even when dried, unsplit logs are difficult to ignite because they don't have the sharp edges where the flames first catch.

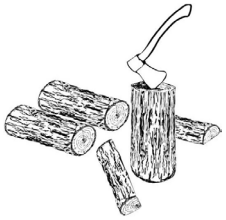

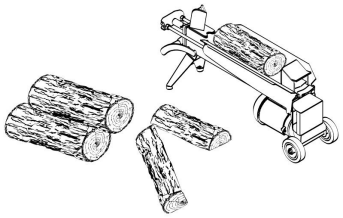

Wood should be split to a range of sizes, from about 3" to 6" (75 mm to 150 mm) in cross section. Having a range of sizes makes starting and rekindling fires much easier.

3.4 Compressed Wood Logs

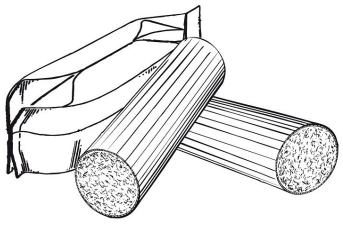

Compressed wood logs made of 100% compressed sawdust can be burned with caution in the number of these logs burned at once. Do not burn compressed logs made of wax impregnated sawdust or logs with any chemical additives.

Do not poke or stir the logs while they are burning.

Use only logs that meet the requirements of ULC/ORD C127 M1990 for composite logs. Refer to package cautions and warnings before using logs.

3.5 Drying Time

Firewood that is not dry enough to burn is the cause of most complaints about wood-burning appliances. Continually burning green or unseasoned wood produces more creosote and involves lack of heat and dirty glass door.

Firewood with a moisture content between 15% and 20% will allow the fireplace to produce its highest possible efficiency.

Here are some facts to consider in estimating drying time:

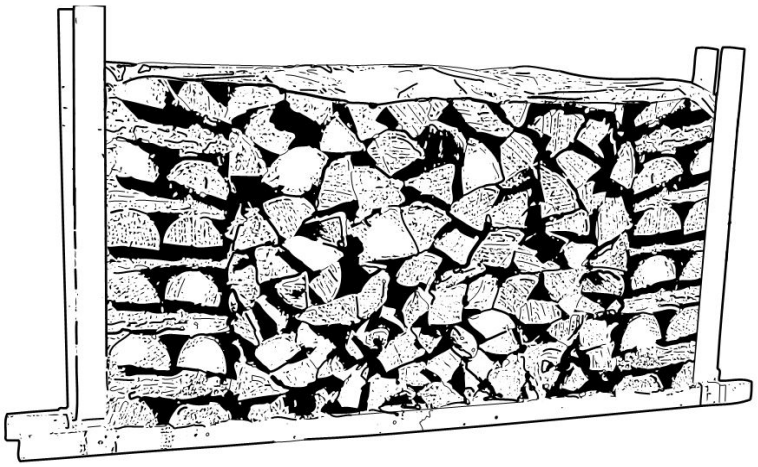

- Firewood bought from a dealer is rarely dry enough to burn, so it is advisable to buy the wood in spring and dry it yourself;
- Drying happens faster in dry weather than in a damp climate;
- Drying happens faster in warm summer weather than in winter weather;
- Split pieces dry more quickly than unsplit rounds;
- Softwoods like pine, spruce, poplar, and aspen take less time to dry than hardwoods. They can be dry enough to burn after being stacked to air dry only for the summer months;
- Hardwoods like oak, maple and ash can take one, or even two years to dry fully, especially if the pieces are big;
- Firewood dries more quickly when stacked outside in a location exposed to sun and wind; it takes much longer to dry when stacked in a wood shed;
- Firewood with a moisture content of 15% to 20% will allow the fireplace to reach its highest efficiency.

Firewood is dry enough to burn when:

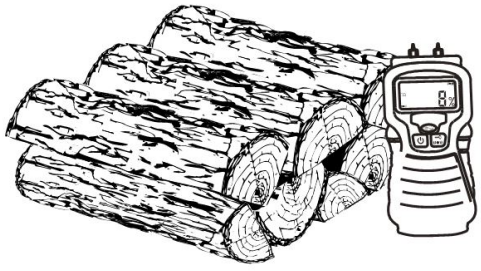

- Cracks form at the end of logs;
- The wood turns from white or cream colored to grey or yellow;
- Two pieces of wood struck together sounds hollow;
- The face of a fresh cut feels warm and dry;
- The moisture content read by a moisture meter is between 15% to 20%.

4. Operating the Fireplace

This wood heater has a manufacturer-set minimum low burn rate that must not be altered. It is against federal regulations to alter this setting or otherwise operate this wood heater in a manner inconsistent with operating instructions in this manual.

4.1 Using a Fire Screen

In the United States or in provinces with a particulate emissions limit (e.g.: US EPA), the use of open-door wood fireplace with a rigid fire screen is prohibited.

This fireplace has been tested for use with an open door in conjunction with a fire screen, sold separately. The fire screen must be properly secured on the fireplace to avoid any risk of sparks damaging the flooring. When the fire screen is in use, do not leave the fireplace unattended to respond promptly in the event of smoke spillage into the room. Potential causes of smoke spillage are described in Section "9. The Venting System" of this manual. See "Appendix 6: Optional Fire Screen Installation" for installation instructions.

Operating the fireplace with a fire screen increases possibilities of generating carbon monoxide. Carbon monoxide is an odourless gas that is highly toxic which can cause death at high concentration in air. Installation of a carbon monoxide detector is highly recommended.

4.2 Blower Operation

A blower **(A)** is already installed in the fireplace. It is located behind the faceplace, at the bottom of the fireplace. Its function is to increase airflow around the fireplace air jacket and improve hot air circulation in the room. When used regularly, the blower can provide a small increase in efficiency, up to 2%. However, the use of a blower should not be used as a way to gain more output from a fireplace that is undersized for the space it is intended to heat.

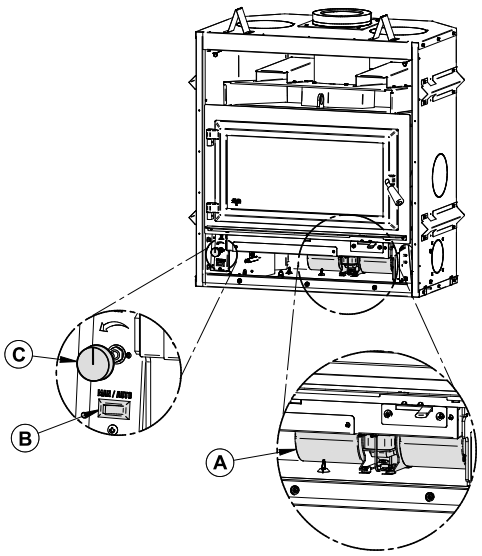

The blower can operate in automatic or manual mode. To choose the mode, just press the rocker switch **(B)** and choose «AUTO» for automatic mode and «MAN» for manual mode.

Automatic mode: Press the rocker switch **(B)** and choose the «AUTO» mode. Choose the operating speed of the blower with the rheostat button **(C)** above. The blower will start automatically when the fireplace is warm and will shut down automatically when the fireplace is cold.

Manual mode: Press the the rocker switch **(B)** and select the «MAN» mode. Choose the operating speed of the blower with the rheostat button **(C)** above. The blower will start immediately. The blower must be stopped manually, either by turning the rheostat button **(C)** fully to the left or by changing the mode.

OFF: To completely turn off the blower, turn the rheostat button **(C)** counterclockwise until the blower stops.

5. Burning Wood Efficiently

5.1 First Use

Two things happen when burning the first few fires; the paint cures and the internal components are conditioned. As the paint cures, some of the chemicals vaporize. The vapors are not poisonous, but they smell bad. Fresh paint fumes can also trigger false alarms in smoke detectors. When lighting the heater for the first few times, it may be wise to open doors and windows to ventilate the house.

Burn two or three small fires to begin the curing and conditioning process. Then build bigger and hotter fires until there is no longer paint smell from the fireplace. As hotter and hotter fires are burned, more of the painted surfaces reach the curing temperature of the paint. The smell of curing paint does not disappear until one or two very hot fires have been burned.

5.2 Lighting Fires

Each person heating with wood develops its own favorite way to light fires. Regardless of the method chosen, the goal should be to have a hot fire burning, quickly. A fire that ignites fast produces less smoke and deposits less creosote in the chimney.

Never use gasoline, gasoline-type lantern fuel (naphtha), fuel oil, motor oil, kerosene, charcoal lighter fluid, or similar liquids or aerosols to start or 'freshen up' a fire in this wood fireplace. Keep all such liquids well away from the fireplace while it is in use.

5.2.1 EPA loading method

The best loading method for efficient and clean combustion with this fireplace is the EPA loading method which you can find in the section "2.4 EPA Certification Loading".

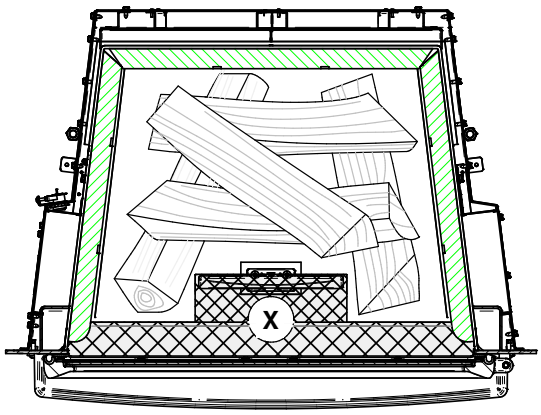

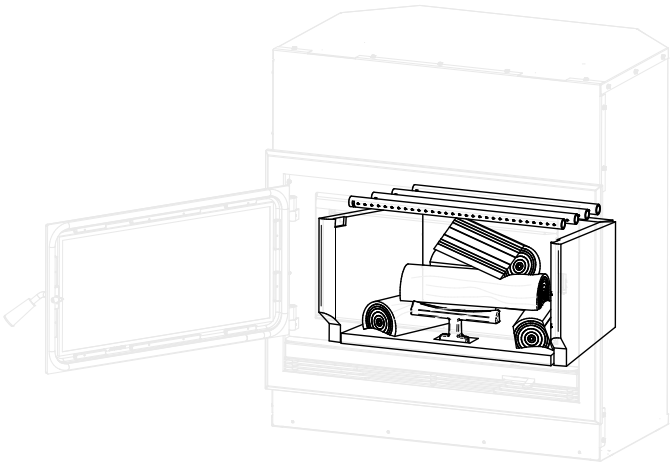

The images above show the space in the firebox where the logs are to be placed. It is important to always respect this space and not to put logs in the grid area marked with an X. The marked area is defined by the space between the glass and the cast-iron andiron. To have a good ignition, place the two lower logs in a north-south position and cross the others on top. Leave enough space between the logs for good air circulation. The log length recommended for this fireplace is 16 in.

Here are three more ways to ignite wood fires.

5.2.2 Conventional Method

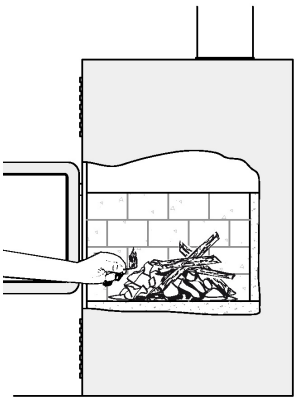

The conventional method to build a wood fire is to crumple 5 to 10 sheets of newspaper and place them in the firebox and hold them in place with ten pieces of kindling wood. The kindling should be placed on and behind the newspaper.

Then add two or three small pieces of firewood. Open the air intake control completely and ignite the newspaper. Leave the door slightly ajar. Once the fire has ignited, the door can be closed with the air control still fully open. When the kindling is almost completely burned, standard firewood pieces can be added.

Do not leave the fireplace unattended when the door is slightly open. Always close and latch the door after the fire ignites.

5.2.3 The Top Down Method

This method is the opposite of the conventional method and only works properly if well-seasoned wood is used.

Place three or four small, split, dry logs in the firebox. Arrange the kindling wood on the logs in two layers at right angles and place a dozen finely split kindling on the second row. It is possible to use ragged paper but it may not hold in place since it tends to roll while it is burning. The best is to wrap a sheet on itself, grab the ends of the roll and make a knot.

Use four or five sheets of paper tied together and put them on top and around the kindling. Open the air intake control completely, ignite the paper and close the door.

The top down fire method has two advantages over the traditional method: first, the fire does not collapse on itself, and it is not necessary to add wood gradually since the combustion chamber is full before the fire is lit.

5.2.4 Two Parallel Logs Method

Two spit logs are placed in the firebox with a few sheets of twisted newspapers in between the logs. Fine kindling is added across the two logs and some larger kindling across those, log cabin style. Newspaper is lit.

5.2.5 Using Fire Starters

Commercial fire starters can be used instead of a newspaper. Some of these starters are made of sawdust and wax and others are made of specialized flammable solid chemicals. Always follow the package directions when using.

Gel starters can also be used, but only to light a fire, in a cold combustion chamber without hot embers inside.

5.3 Combustion Cycles

Wood heating with a space heater is very different than other forms of heating. There will be temperature variations in different parts of the house and there will be temperature variations throughout day and night. This is normal, and for experienced wood burners these are advantages of zone heating wood burning.

Wood heaters don't have a steady heat output. It is normal for the temperature to rise after a new load of wood is ignited and for its temperature to gradually decrease throughout the burning cycle.

This increasing and decreasing temperature can be matched with the household routines. For example, the temperature in the area can be cooler when the household is active, and it can be warmer when it is inactive.

Wood burns best in cycles. A cycle starts when a new load of wood is ignited by hot coals and ends when that load has been consumed down to a bed of charcoal about the same size as it was when the wood was loaded.

Trying to produce a steady heat output by placing a single log on the fire at regular intervals is not recommended. Always place at least three, and preferably more pieces on the fire at a time so that the heat radiated from one piece helps to ignite the pieces next to it. Each load of wood should provide several hours of heating. The size of each load may vary depending on the amount of heat required.

Burning in cycles means the loading door does not need to be opened while the wood is flaming. This is an advantage since it is preventing smoke leaking from the heater when the door is opened as a full fire is burning. This is especially true if the chimney is on the outside wall of the house.

If the door must be opened while the fire is flaming, fully open air control for a few minutes then open the door slowly.

5.4 Rekindling a Fire

When the temperature of the room is lower and all that remains is embers, it is time to reload. Remove excess ash from the front of the firebox and bring the ashes forward. Place a new load of wood on, and at the back of the embers. Open the air control completely and close the door.

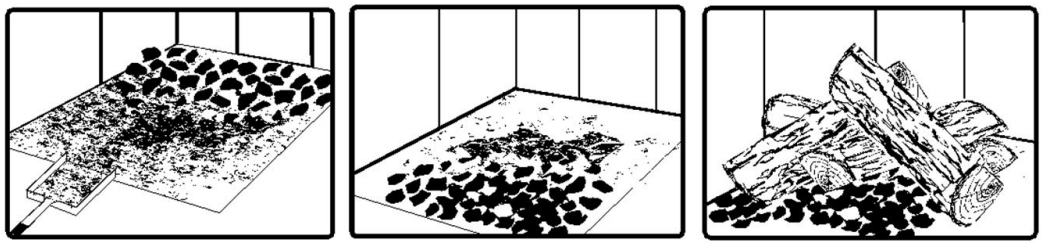

Raking the coals is useful for two reasons. First, it brings them near where most of the combustion air enters the firebox. This will ignite the new load quickly. Secondly, the charcoal will not be smothered by the new load of wood. When the embers are simply spread inside the combustion chamber, the new load smoulder for a long time before igniting.

Close the air control only when the firebox is full of bright turbulent flames, the wood is charred, and its edges are glowing.

> *The heater should not be left unattended during ignition and the fire should not burn at full intensity for more than a few minutes.*

When lighting a new load, the appliance produces a heat surge. This heat surge is pleasant when the room temperature is cool but can be unpleasant when the room is already warm. Therefore, it is best to let each load of wood burn completely so that the room cools down before putting a load of wood back on.

5.5 Removing Ashes

Ash should be removed from the firebox every two to three days of full-time heating. Ash should not accumulate excessively in the firebox since it will affect the proper operation of the appliance.

The best time to remove ash is in the morning, after an overnight fire when the fireplace is relatively cold, but there is still a little chimney draft to draw the ash dust into the fireplace and prevent going out into the room.

> *Ashes should be placed in a tightly covered metal container. The container must be placed on a non-combustible floor or on the ground well away from all combustible materials. Ashes almost always contain live embers that can stay hot for days and which release carbon monoxide gas. If the ashes are disposed of by burial in soil or otherwise locally dispersed, they should be kept in a closed metal container until they are completely cooled. No other waste should be placed in this container.*



NEVER STORE ASHES INDOORS OR IN A NON-METALLIC CONTAINER OR ON A WOODEN DECK.

5.6 Air Intake Control

Once the firewood, firebox and chimney are hot, air intake can be reduced to achieve a steady burn.

As the air intake is reduced, the burn rate decreases. This has the effect of distributing the thermal energy of the fuel over a longer period of time. In addition, the flow rate of exhaust through the appliance and flue pipe slows down, which increases the duration of the energy transfer of the exhaust gases. As the air intake is reduced, the flame slows down.

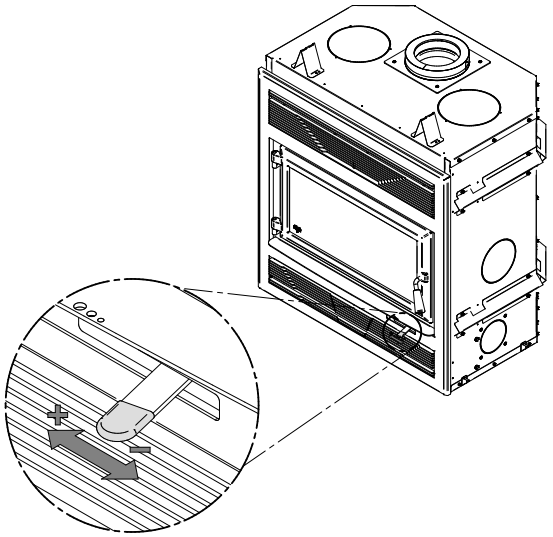

If the flames diminish to the point of disappearing, the air intake has been reduced too early in the combustion cycle or the wood used is too wet. If the wood is dry and the air control is used properly, the flames should decrease, but remain bright and stable.

On the other hand, too much air can make the fire uncontrollable, creating very high temperatures in the unit as well as in the chimney and seriously damaging them. A reddish glow on the unit and on the chimney components indicates overheating. Excessive temperatures can cause a chimney fire.

5.7 Fire Types

Using the air intake control is not the only way to match the fireplace heat output to the desired temperature in the house. A house will need far less heating in October than in January to maintain a comfortable temperature. Filling the firebox full in fall weather will overheat the space. Otherwise, the combustion rate will have to be reduced to a minimum and the fire will be smoky and inefficient.

Here are some suggestions for building fires suitable for different heating needs.

5.7.1 Flash Fire

To build a small fire that will produce a low heat output, use small pieces of firewood and load them crisscross in the firebox. The pieces should only be 3" (76 mm) to 4" (102 mm) in diameter. After raking the coals, lay two pieces parallel to each other diagonally in the firebox and lay two more across them in the other direction. Open the air control fully and only reduce the air after the wood is fully flaming.

This kind of fire is good for mild weather and should provide enough heat for up to four hours. Small fires like this are a good time to use softer wood species and avoid overheating the house.

5.7.2 Low and Long Output Fires

For a fire that will last up to eight hours but will not produce intense heat, use soft wood and place the logs compactly in the firebox. Before reducing the air intake, the load will have to burn at full heat for long enough for charring the surface of the logs. The flame must be bright before letting the fire burn by itself.

5.7.3 High Output Fires

When heating needs are high during cold weather, the fire should burn steadily and brightly. This is the time to use larger pieces of hardwood. Place the biggest pieces at the back of the firebox and place the rest of the pieces compactly. A densely built fire like this will produce the longest combustion this fireplace is capable of. Special attention must be paid when building fires like this since if the air intake is reduced too quickly, the fire could smoulder. The wood must be flaming brightly before leaving the fire to burn.

5.7.4 Maximum Burn Cycle Times

The burn cycle time is the period between loading wood on a coal bed and the consumption of that wood back to a coal bed of the same size. The flaming phase of the fire lasts for roughly the first half of the burn cycle and the second half is the coal bed phase during which there is little or no flame. The burning time expected from this fireplace, including both phases, will vary depending on a number of things, such as:

- firebox size,
- the amount of wood loaded,
- the species of wood,
- the wood moisture content,
- the size of the space to be heated,
- the climate zone where the house is, and
- the time of the year.

The table below gives an approximate maximum burn cycle times, based on firebox volume.

Table 1 : Approximate Maximum Burn Cycle Time

FIREBOX VOLUME	MAXIMUM BURN CYCLE TIME
<1.5 cubic feet	3 to 5 hours
1.5 c.f. to 2.0 c.f	5 to 6 hours
2.0 c.f. to 2.5 c.f.	6 to 8 hours
2.5 c.f. to 3.0 c.f.	8 to 9 hours
>3.0 c.f.	9 to 10 hours

A longer burning time is not necessarily an indication of efficient fireplace operation. It is preferable to build a smaller fire that will provide three or four hours of heating than to fully load the firebox for a much longer burn. Shorter burn cycles make it easier to match the heat output of the fireplace to the heat demand for the space.

5.7.5 Logs Orientation

In a relatively square firebox, the wood can be loaded north-south (ends of the logs visible) or east-west (sides of the logs visible).

North-south loads allow more wood to be loaded at the same time. On the other hand, they break into smaller pieces faster. North-south loading is good for high output, long lasting fires for cold weather.

East-west loads allow a limited amount of wood since too many logs could cause them to fall on the glass. East-west loads, placed in a compact way, take a long time before breaking down. They are excellent for low-intensity, long-lasting fires in relatively mild weather.

5.7.6 Carbon Monoxide

When there is no more flame in the firebox and there are still some unburned logs, check outside if there is smoke coming out of the chimney. If this is the case, it means that the fire is out of air to burn properly. In this situation, the level of CO increase and it is important to react. Open the door slightly and move the logs with a poker. Create a passage for the air below by making a trench with the ember bed. Add small pieces of wood to restart the combustion.

6. Maintenance

This heater will give many years of reliable service if used and maintained properly. Internal components of the firebox such as firebricks or refractory panels, baffle and air tubes will wear over time. Defective parts should always be replaced with original parts.

To avoid premature deterioration, follow the lighting and reloading procedures in section «"5. Burning Wood Efficiently"» and also avoid letting the heater run with the air intake fully open for entire burn cycles.

6.1 Cleaning and Painting

Painted and plated surfaces can be wiped down with a soft, damp cloth. If the paint is scratched or damaged, it is possible to repaint the fireplace with a heat-resistant paint. **Do not clean or paint the fireplace when it is hot.** Before painting, the surface should be sanded lightly with sandpaper and then wiped off to remove dust. Apply two thin layers of paint.

6.2 Refractory Material and Baffle

The intense heat of the fire can cause slight cracks in the refractory panels. It is possible to minimize the appearance of these cracks by hardening the panels as described in the section "5.1 First Use". Slight cracks will not reduce the effectiveness of the panels. On the other hand, if wider cracks appears, they must be replaced. Inspect the refractory panels and the baffle for damage periodically and replace anything that is cracked or broken.

Operation of the heater with a cracked or missing baffle may cause unsafe temperatures and hazardous conditions and will void the warranty.

6.3 Glass Door

6.3.1 Cleaning

Under normal conditions, the door glass should stay relatively clear. If the firewood is dry enough and the operating instructions in this manual are followed, a whitish, dusty deposit will form on the inner surface of the glass after a week or so of use. This is normal and can be easily removed when the heater is cold by wiping with a damp cloth or paper towel and then drying.

When the fireplace runs at a low combustion rate, light brown stains may form, especially in the lower corners of the glass. This indicates that the fire has been smoky and some of the smoke has condensed on the glass. It also indicates incomplete combustion of the wood, which also means more smoke emissions and faster formation of creosote in the chimney.

The deposits that form on the glass are the best indication of the fuel quality and success in properly using the fireplace. These stains can be cleaned with a special wood stove glass cleaner. **Do not use abrasive products to clean the glass.**

The goal should be having a clear glass with no brown stains. If brown stains appear regularly on the glass, something about the fuel or the operating procedure needs to be changed. When brown streaks are coming from the edge of the glass, it is time to replace the gasket around the glass. Always replace the gasket with a genuine one.

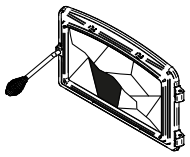

Do not clean the glass when the fireplace is hot.

Do not abuse the glass door by striking or slamming shut.

Do not use the fireplace if the glass is broken.

6.3.2 Replacement

The glass used is a ceramic glass, 5/32" (4 mm) thick, 24 7/8" x 11 3/4" (632 mm x 298 mm) tested to reach temperatures up to 1400° F. If the glass breaks, it must be replaced with one having the same specification. **Tempered glass or ordinary glass will not withstand the high temperatures of this unit.**

To remove or replace the glass **(G)**:

1. Remove the door **(H)** and place it face-down on something soft.
2. Remove the glass retainers **(E)** held in place by the screws **(D)**.
3. Remove the frames **(F)**.
4. Remove the glass. If it is damaged install a new one in place. The replacement glass must have a gasket all around.
5. Reinstall the glass, being careful to centre the glass in the door and not to over-tightening the retaining screw.

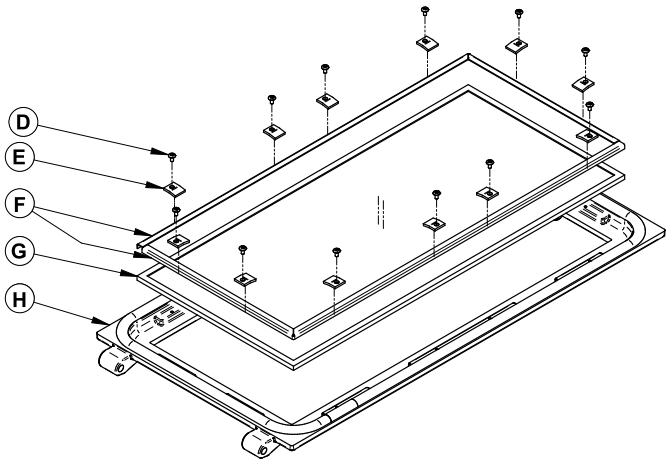

The two main causes of broken door glass are uneven placement in the door and over-tightening the retaining screws.

6.3.3 Gasket

The glass gasket is flat, adhesive-backed, woven fibreglass. The gasket must be centred on the edge of the glass.

1. Follow the steps of the previous section to remove the glass.
2. Remove the old gasket and clean the glass thoroughly.
3. Peel back a section of the paper covering the adhesive and place the gasket on a table with the adhesive side up.
4. Stick the end of the gasket to the middle of one edge, then press the edge of the glass down onto the gasket, taking care that it is perfectly centred on the gasket.
5. Peel off more of the backing and rotate the glass. The gasket must not be stretched during installation.
6. Cut the gasket to the required length. Pinch the gasket onto the glass in a U shape, all around the glass.

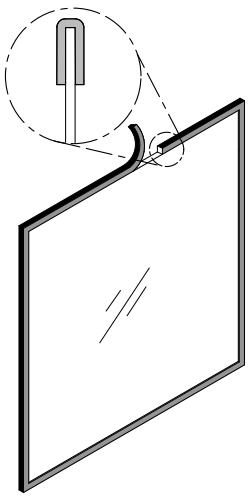

6.4 Door

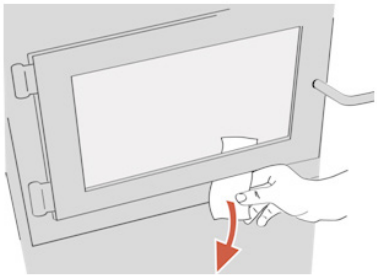

In order for the fireplace to burn at its best efficiency, the door must provide a perfect seal with the firebox. Therefore, the gasket should be inspected periodically to check for a good seal. The tightness of the door seal can be verified by closing and latching the door on a strip of paper. The test must be performed all around the door. If the paper slips out easily anywhere, either adjust the door or replace the gasket.

At the end of each heating season it is recommended to add a high temperature graphite paste on the threads of the door handle. This paste wil protect the threads from rust and prevent dust accumulation that can prevent the handle from rotating freely.

6.4.1 Adjustment

The door seal may be improved with a simple latch mechanism adjustment on the door:

1. Remove the split pin by pulling and turning it using pliers.

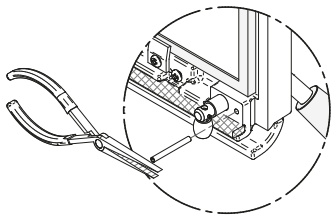

2. Turn the handle one counterclockwise turn to increase pressure.

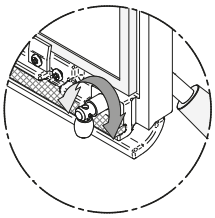

3. Reinstall the split pin with a small hammer.

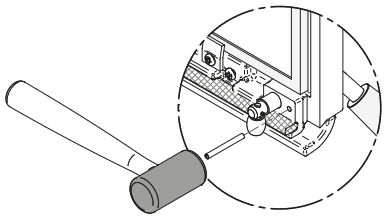

6.4.2 Alignement

To align the doors, open the doors and slightly unscrew the set screws on the lower and upper door hinges with a 3/32" Allen key to release the adjustable hinge rods.

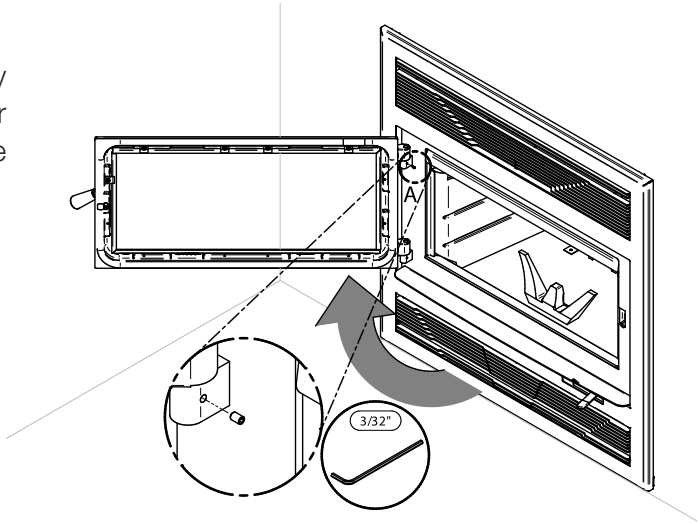

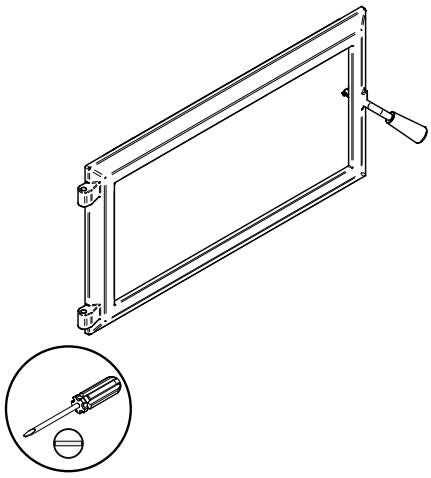

Using a flat screwdriver, turn the adjustable hinge rods in the directions shown to adjust the doors. Tighten the set screws on the door hinges when they are in the desired positions.

	Doors position with more space	Doors position with less space	Doors tilt up	Doors tilt down
Top pintle				
Bottom pintle				

6.4.3 Gasket

It is important to replace the gasket with another having the same diameter and density to maintain a good seal.

1. Remove the door and place it face-down on something soft.
2. Remove the old gasket from the door. Use a screwdriver to scrape the old gasket adhesive from the door gasket groove.
3. Apply a bead of approximately 3/16" (5 mm) of high temperature silicone in the door gasket groove. Starting from the middle, hinges side, press the gasket into the groove. The gasket must not be stretched during installation.
4. Leave about ½" (10 mm) long of the gasket when cutting and press the end into the groove. Tuck any loose fibers under the gasket and into the silicone.
5. Close the door. Do not use the fireplace for 24 hours.

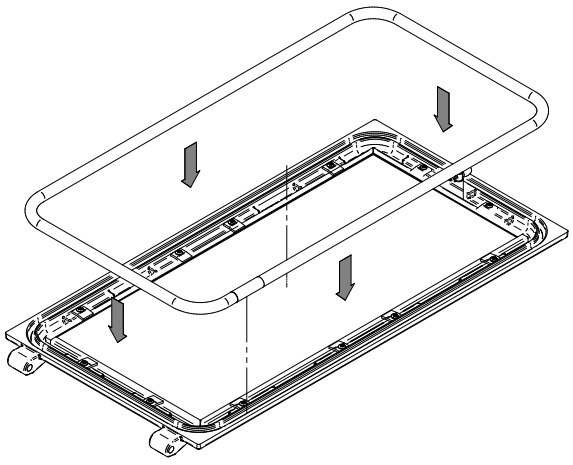

Location	Dimensions
On door frame	82" long Round 5/8"

6.5 Exhaust System

Wood smoke can condense inside the chimney, forming a inflammable deposit called creosote. If creosote builds up in the system, it can ignite when a hot fire is burned in the insert. A very hot fire can progress to the top of the chimney. Severe chimney fires can damage even the best chimneys. Smouldering, smoky fires can quickly cause a thick layer of creosote to form. When the insert is operated properly, the exhaust from the chimney is mostly clear and creosote builds up more slowly.

«Creosote - Formation and Need to Removal

When wood is burned slowly, it produces tar and other organic vapors, which combine with expelled moisture to form creosote. The creosote vapors condense in the relatively cooler chimney flue of a slow-burning fire. As a result, creosote residue accumulates on the flue lining. When ignited this creosote makes an extremely hot fire. The chimney connector and chimney should be inspected at least once every two months during the heating season to determine if a creosote buildup has occurred. If creosote has accumulated (⅛" [3mm] or more it should be removed to reduce the risk of a chimney fire»

6.5.1 Cleaning frequency

It is not possible to predict how much or how quickly creosote will form in the chimney. It is important, therefore, to check the build-up in the chimney monthly until the rate of creosote formation is determined. Even if creosote forms slowly in the system, the chimney should be cleaned and inspected at least once each year. Establish a routine for the fuel, wood burner and firing technique. Check daily for creosote build-up until experience shows how often you need to clean to be safe. Be aware that the hotter the fire, the less creosote is deposited and weekly cleaning may be necessary in mild weather even though monthly cleaning may be enough in the coldest months. Contact your local municipal or provincial fire authority for information on how to handle a chimney fire. Have a clearly understood plan to handle a chimney fire.

6.5.2 Sweeping the Chimney

Chimney sweeping can be a difficult and dangerous job. People with no chimney sweeping experience will often prefer to hire a professional chimney sweep to inspect and clean the system for the first time. After seeing the cleaning process, some will choose to do it themselves. The chimney should be checked regularly for creosote buildup. Inspection and cleaning of the chimney can be facilitated by removing the baffle. See "Annexe 8: Secondary Air Tubes and Baffle Installation" for more details.



6.5.3 Chimney Fire

Regular chimney maintenance and inspection can prevent chimney fires. If you have a chimney fire, follow these steps:

1. Close the fireplace door and the air intake control;
2. Alert the occupants of the house of the possible danger;
3. If you require assistance, alert the fire department;
4. If possible, use a dry chemical fire extinguisher, baking soda or sand to control the fire. ***Do not use water*** as it may cause a dangerous steam explosion;

Do not use the appliance again until the fireplace and its chimney have been inspected by a qualified chimney sweep or a fire department inspector.

PART B – INSTALLATION

Install the fireplace only as described in these instructions and using only the following fireplace components and chimney components from chimney manufacturers listed in "Table 4 : Approved Chimneys".

- Fireplace;
- Faceplate and louvers;
- Overlay;
- Refractory panels;
- Insulated chimney made by the manufacturers listed in Table 4, with the corresponding specifications:
  - Chimney lengths;
  - Elbows (where necessary);
  - Associated components as per these installation instructions.

Additional Equipment (optional)

- Forced air distribution kit;
- Traditional or modern gravity hot air distribution kit;
- Fresh air kit;
- Fire Screen;
- Heat shield for combustible shelf.

7. Safety Information and Standards

7.1 Safety

- The fireplace and chimney must be in an enclosure up to the attic.

- **CAUTION: DO NOT ATTEMPT TO MODIFY OR ALTER THE CONSTRUCTION OF THE FIREPLACE OR ITS COMPONENTS. ANY MODIFICATION OR ALTERATION OF CONSTRUCTION MAY VOID THE WARRANTY, LISTINGS AND APPROVALS OF THIS SYSTEM. IN THAT CASE, STOVE BUILDER INTERNATIONAL (SBI) WILL NOT BE RESPONSIBLE FOR DAMAGES. INSTALL THE FIREPLACE ONLY AS DESCRIBED IN THESE INSTRUCTIONS.**

- Mixing of appliance components from different sources or modifying components is prohibited and will void the warranty. Any modification of the fireplace that has not been approved in writing by the testing authority is prohibited and violates CSA B365 (Canada) and NFPA 211 (USA) standards.

- The manufacturer grants no warranty, implied or stated, for the poor installation or lack of maintenance of the fireplace and assumes no responsibility for any consequential damages.

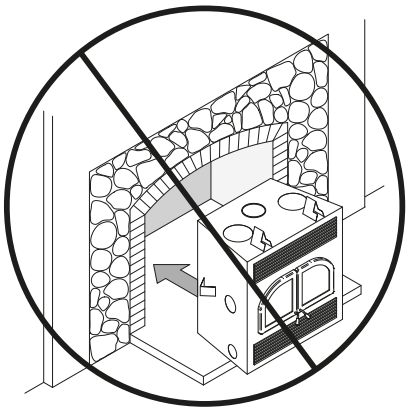

- This fireplace must always be used with the original andirons.

- Do not use a fireplace insert and other products not specified for use with this fireplace.

- Do not install in a mobile home (Canada) or manufactured home (USA).

- Do not use materials other than those listed in the replacement parts section during installation as they may be safety hazards and a fire could result.

- **WARNING : THIS FIREPLACE HAS NOT BEEN TESTED WITH AN UNVENTED GAS LOG SET. TO REDUCE THE RISK OF FIRE OR INJURY, DO NOT INSTALL AN UNVENTED GAS LOG SET INTO THIS FIREPLACE.**

7.2 Standards

When installed and operated as described in these instructions, this wood fireplace is suitable for use in residential installations.

In Canada, the CSA B365 «Installation Code for Solid Fuel Burning Appliances and Equipment» and the CSA C22.1 «Canadian National Electrical Code» are to be followed in the absence of local code requirements.

In the USA, the ANSI NFPA 211 «Standard for Chimneys, Fireplaces, Vents and Solid Fuel-Burning Appliances» and the ANSI NFPA 70 «National Electrical Code» are to be followed in the absence of local code requirements.

This fireplace is not approved for use with a so-called “positive flue connection” to the clay tile of a masonry chimney.

8. Fireplace Installation

8.1 Standoff installation

Before installing the fireplace, **it is mandatory to install the standoffs** on the top **(B)** and the back **(C)** of the fireplace. The standoffs **(B)** and **(C)** can be found in the fireplace firebox and the screws **(A)** to install them can be found in the fireplace manual.

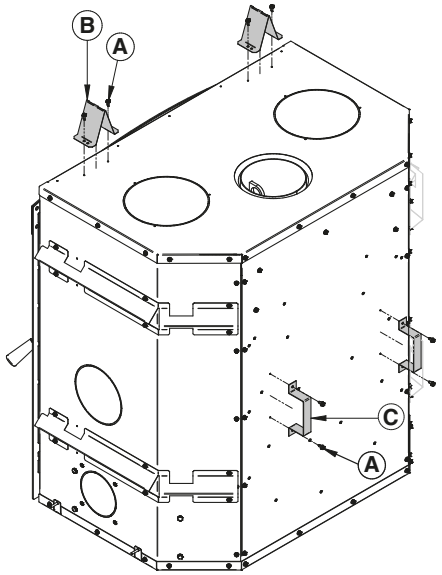

8.2 Carrying Handles

To facilitate the transport of the fireplace, handles sold as an option may be used. They are installed on each side of the fireplace. Wearing gloves is strongly recommended when moving the fireplace.



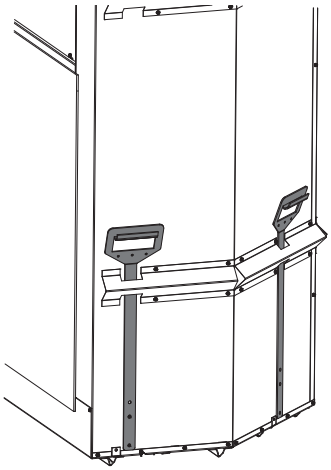

8.3 Location

The best location for the fireplace should consider the location of windows, doors, and circulation in the room. There must be enough space in front of the fireplace for the hearth extension and mantel and on the sides or back for the different heat distribution system, for the fresh air intake and for the chimney. Ideally, the chimney must be able to pass through the house without the need to cut floor joists or roof trusses.

8.4 Clearances to combustibles

The clearances shown in this section have been determined by test according to procedures set out in safety standards ULC S610 (Canada) and UL127 (U.S.A.). When the fireplace is installed so that its surfaces are at or beyond the minimum clearances specified, combustible surfaces will not overheat under normal and even abnormal operating conditions.

No part of the fireplace may be located closer to the combustible than the minimum clearance given.

A material is considered non-combustible when made entirely of steel, iron, bricks, tiles, concrete, slate, glass or a combination of these materials. Materials corresponding to ASTM E136 and UL 763 are considered to be non-combustible materials with the exception of gypsum, which will be considered a non-combustible material only if it is certified to withstand an ambient temperature of use of 250°F and more.

- Maximum mantle depth 3" (76 mm)
- Mantle minimum distance 8" (203 mm) (measured from the door opening)
- Side wall distance 13" (330 mm) (measured from the door opening)
- Minimum distance to the wall in front of the fireplace 48" (122 cm)
- Minimum ceiling height : 80" (2,03 m) measured from the base of the fireplace.

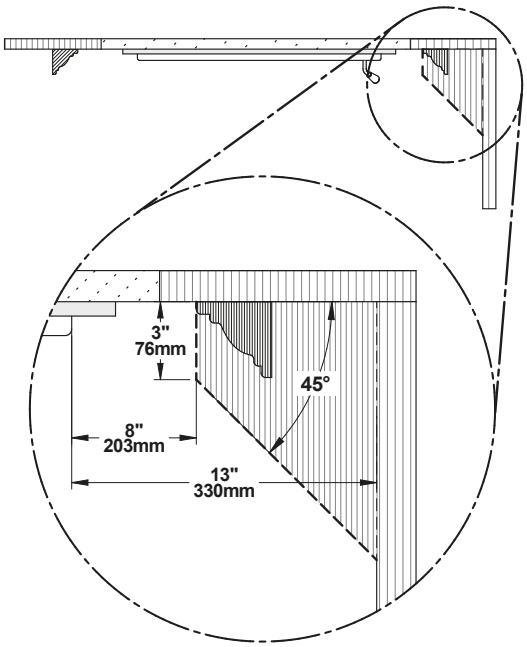

Fireplace enclosure :

- Back wall : 0"
- Sides : 0"
- Floor (underneath the fireplace) : 0"

Chimney enclosure :

- Chimney : 2" (50 mm)

8.5 Framing construction

The frame, on the sides and back of the fireplace, must be made of 2"x 3" (5 cm x 8 cm) or larger. The front studs as well as headers on top of the fireplace must be of a depth no more than the depth of the top standoffs. The standoffs can be installed either flush with the fireplace or setback of ½" depending on the thickness of the finishing material used.

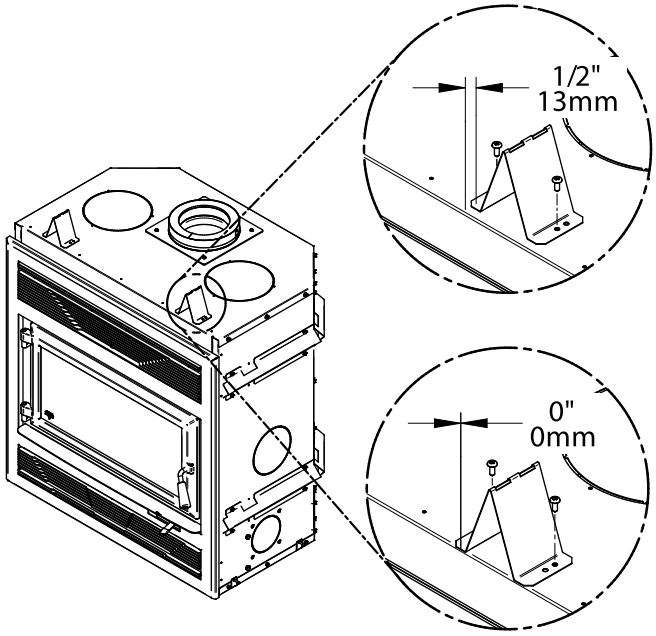

Do not use combustible materials for the frame directly above the fireplace. This area should remain empty to a height of 80" (2.03 m) measured from the base of the fireplace.

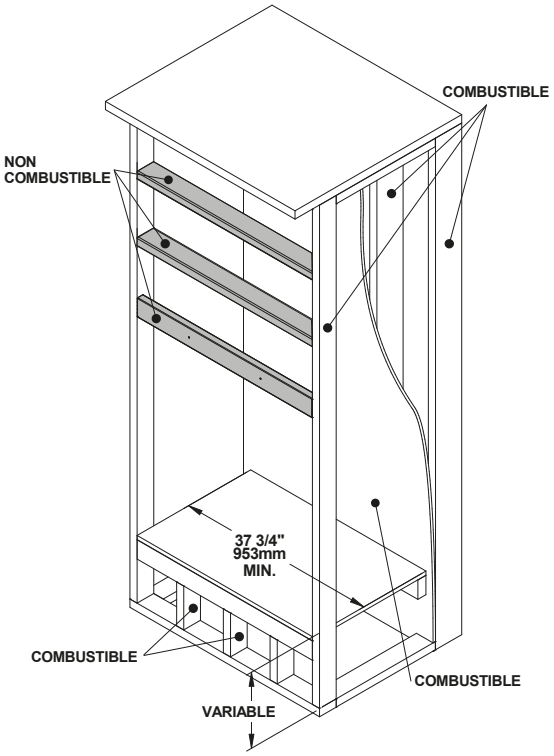

Build the fireplace frame using vertical studs placed on the sides of the fireplace, from the floor to the ceiling. The studs must be set back from the front edge of the fireplace by a space equivalent to the thickness of the finishing material, so that it is flush with the finish of the fireplace.

Headers between studs should be installed as follows:

- The headers must be 2" x 3" (5 cm x 8 cm) or 2" x 4" (5 cm x 10 cm). Do not put wood or other material in the area above the fireplace.
- Install only the cripple studs needed to support the finishing material and mantle.

WARNING : DO NOT FILL THE REQUIRED EMPTY SPACE INSIDE THE ENCLOSURE WITH INSULATION OR ANY OTHER MATERIAL.

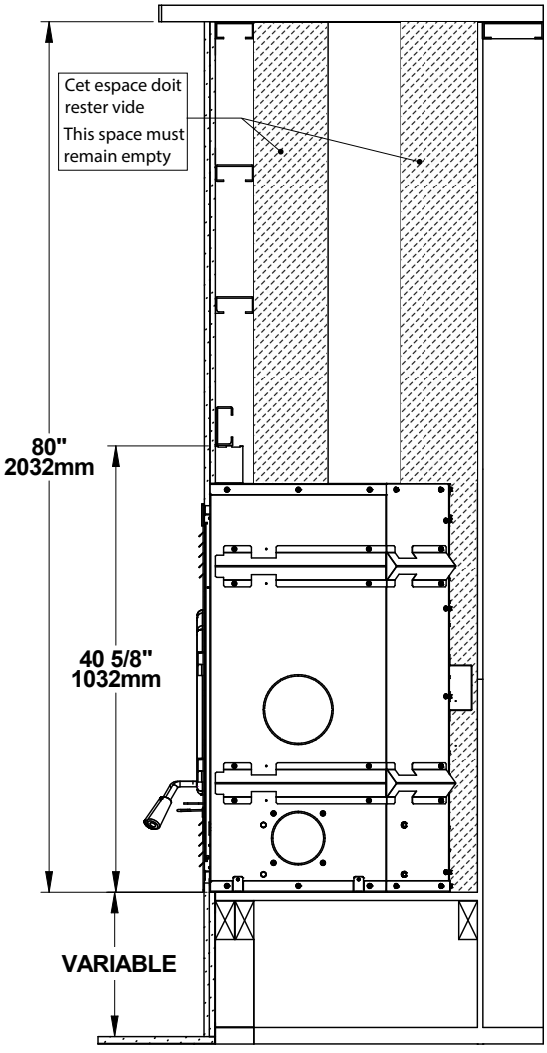

The fireplace must not be in contact with any insulation or loose filling material. Inside the chase, around the fireplace, insulation should be covered with drywall panels or any other finishing material except where non-combustible material is required.

8.5.1 Fireplace Framing

Framing dimensions should be used as a reference only

If a finishing material is installed inside the enclosure, its thickness must be added to the following measurements.

- Framing width 37 ¾" (960 mm)
- Framing height to the first header 41 ⅝" (1057 mm)
- Framing depth 24 ⅞" (632 mm)
- Framing total height 80" (2032 mm)

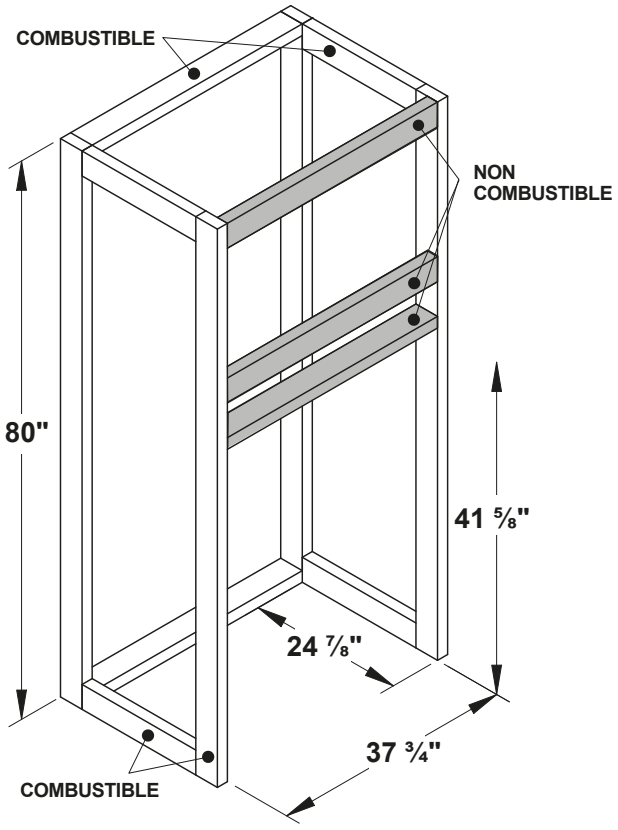

8.5.2 Framing with Fresh Air Intake[15]

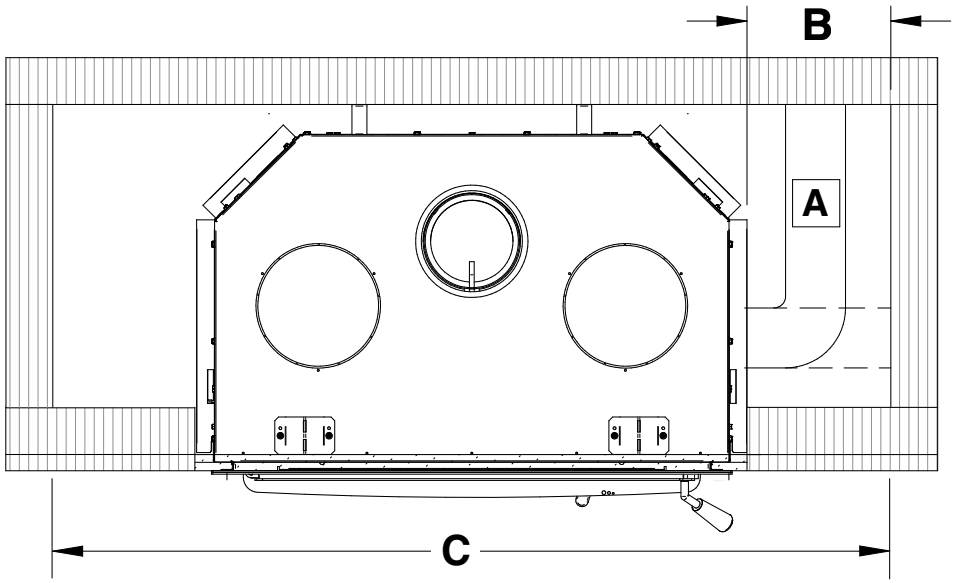

If a finishing material is installed inside the enclosure, its thickness must be added to the following measurements.

A : Fresh air intake duct[16] (Fresh air intake can be installed on the right or underneath).

B : Distance between framing and side fireplace standoff 12" (305 mm)

C : Framing width (Installation with centered fireplace) 60 ¾" (1543 mm)

[15] Framing dimensions are for reference only. These measurements are recommended to prevent the ducts from being inside the standoff or have too tight duct curves. Smaller dimensions can be used depending on the size and type of duct as well as the configuration of the installation.
[16] HVAC duct, as per ULC S110 or UL 181, class 0 or class 1, must withstand temperatures up to 250ºF.

8.5.3 Framing with forced air distribution kit[17]

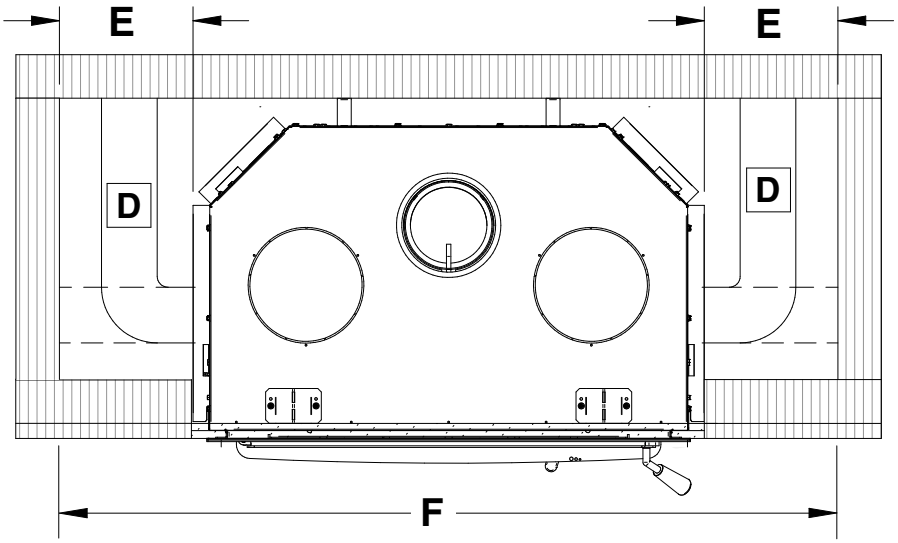

If a finishing material is installed inside the enclosure, its thickness must be added to the following measurements.

D : Forced air duct[18] (Duct can be installed on the left [recommended] **or** on the right).

E : Distance between framing and side fireplace standoff 18" (457 mm)

F : Framing width (Installation with centered fireplace) 72 ¾" (1848 mm)

8.5.4 Framing with corner installation

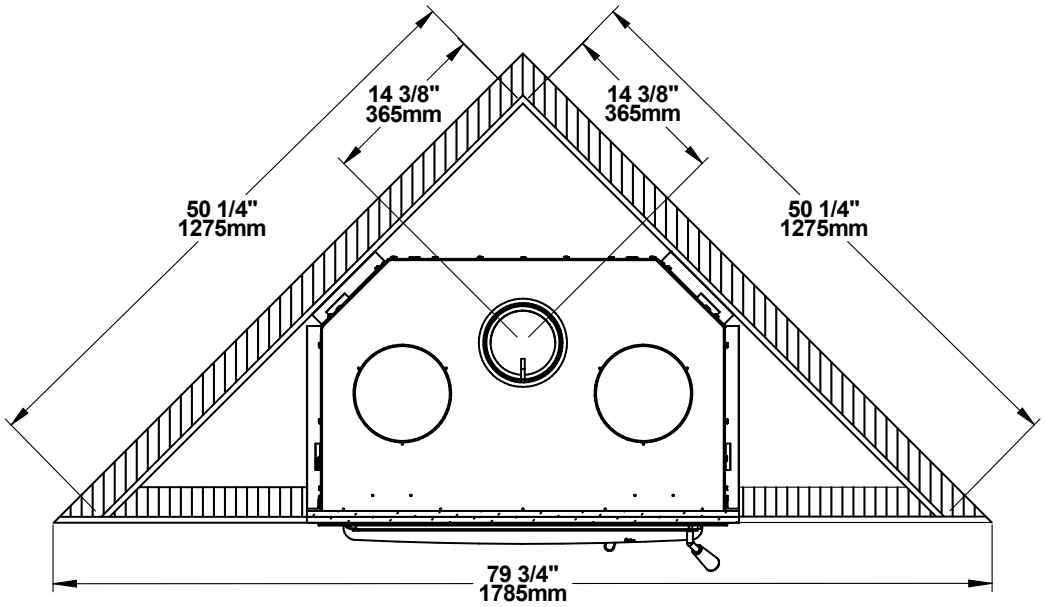

Framing configuration should be used as a reference only. If a finishing material is installed inside the enclosure, its thickness must be added to the following measurements.

Theses values are minimum measurements and may need to be increased to allow the installation of the fresh air intake, the forced air distribution or the type of finishing material used.

[17] Framing dimensions are for reference only. These measurements are recommended to prevent the ducts from being inside the standoff or have too tight duct curves. Smaller dimensions can be used depending on the size and type of duct as well as the configuration of the installation.
[18] HVAC duct, as per ULC S110 or UL 181, class 0 or class 1, must withstand temperatures up to 250ºF.

8.6 Hearth Extension Construction

This fireplace can be installed directly on the floor or on a raised base, combustible or not. The installation can be done according to one of the following options :

OPTION	INSTALLATION TYPE	R FACTOR REQUIRED	NON COMBUSTIBLE FLOOR PROTECTION DEPTH
#1	On floor level	Yes (1.00)	16" (406 mm)
#2	Raised base of 4" or less	Yes (1.00)	16" (406 mm)
#3	Raised base of more than 4"	No	16" (406 mm)

8.6.1 Option #1 - Floor Level Installation

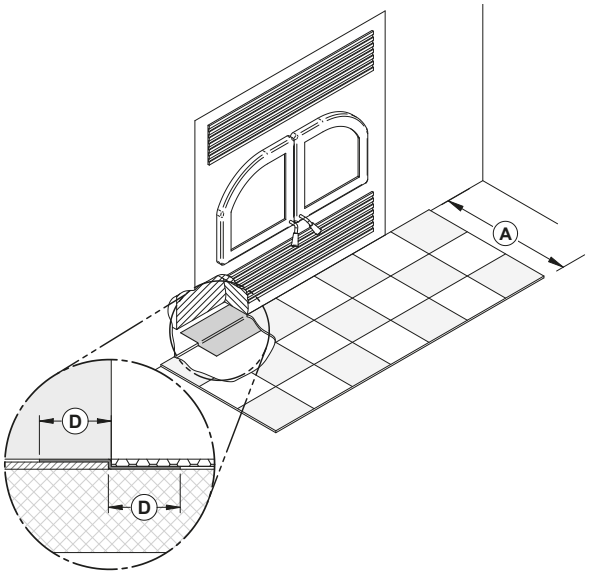

When the fireplace is installed directly on the floor, a non-combustible floor protection of at least 16" **(A)** with an R factor of 1.00 must be installed in front of the fireplace.

The joint between the floor protection and the fireplace must be protected over the entire width of the floor protection by a folded and continuous metal sheet **(D = min 2" [51 mm])** (not supplied).

A clearance of 80" (2.03 m) between the base of the fireplace and the ceiling must be respected.

The minimum floor height under the fireplace should match (or exceed) the height of non-combustible materials used for floor protection.

8.6.2 Option #2 - Raised Base Installation of 4" or Less

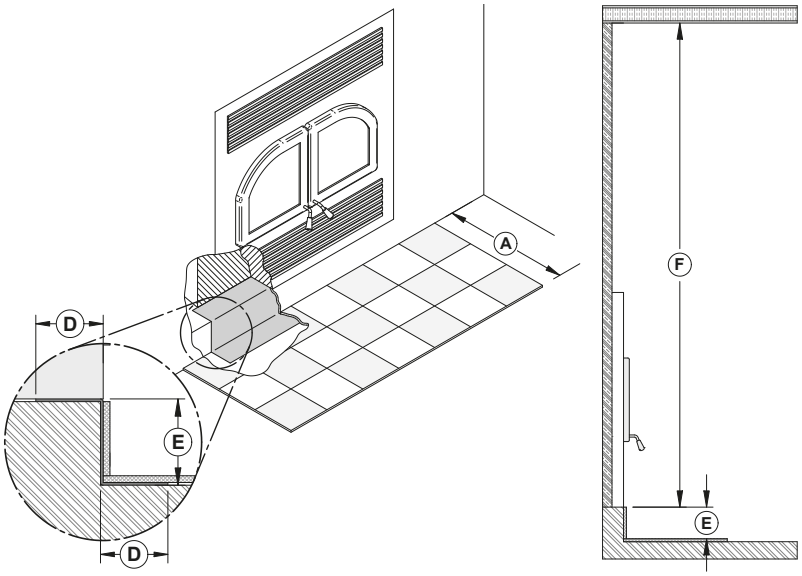

When the fireplace is installed on a raised base of 4" or less **(E)**, a non-combustible floor protection of at least 16" **(A)** with an R factor of 1.00 must be installed in front of the fireplace.

The joint between the floor protection and the fireplace must be protected over the entire width of the floor protection by a folded and continuous metal sheet **(D = min 2" [51 mm])** (not supplied). It is recommended to make the sheet metal in one piece.

A clearance of 80" (2.03 m) **(F)** *between the base of the fireplace and the ceiling must be respected.*

8.6.3 Option #3 - Raised Base Installation of More Than 4"

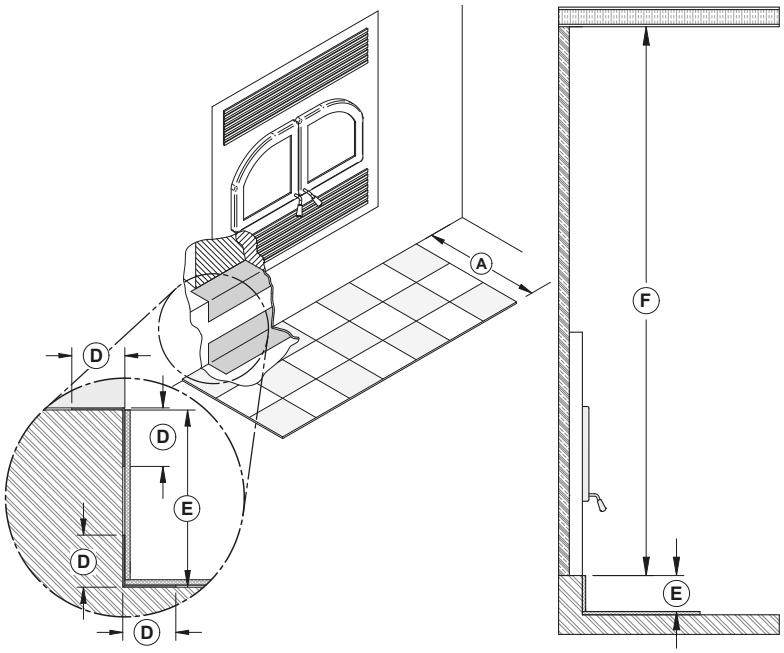

When the fireplace is installed on a raised base of more than 4" **(E)**, a non-combustible floor protection of at least 16" **(A)** with no R factor must be installed in front of the fireplace.

The upper and lower angle, for the full width of the floor protection, must be protected by 2" horizontally and vertically by a folded and continuous metal sheet **(D = 2" [51 mm])** (not supplied). The sheet metal does not have to cover the rest of the wall between the base of the fireplace and the floor. *A clearance of 80" (2.03 m)* **(F)** *between the base of the fireplace and the ceiling must be respected.*

8.6.4 Floor Protection

OPTION	INSTALLATION TYPE	R FACTOR REQUIRED	A	B	C
#1	On floor level	Yes (1.00)	16" (406 mm)	41 ½" (1054 mm)	8" (203 mm)
#2	Raised base of 4" or less	Yes (1.00)	16" (406 mm)	41 ½" (1054 mm)	8" (203 mm)
#3	Raised base of more than 4"	No	16" (406 mm)	41 ½" (1054 mm)	8" (203 mm)

Regardless of the installation type, there must be at least 8" (203 mm) on each side of the fireplace door opening **(C)**.

Floor protection must be a continuous noncombustible surface such as ceramic, concrete board, brick or other equivalent material approved as floor protection. If the ceramic is used, it must be placed on a continuous non-combustible panel to prevent spills from being brought into contact with the floor through cracks or gaps in the ceramic slurry. Alternatives approved by the local building code may also be used.

Do not leave carpets under the floor protection.

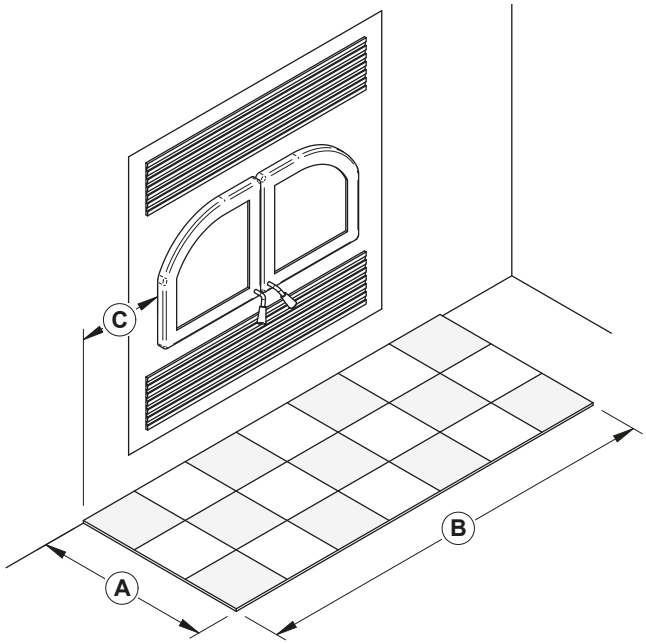

8.6.5 R Factor

There are two ways to calculate the R-value of the floor protection. First, by adding the R-values of materials used, or by the conversion if the K factor and thickness of the floor protection are given.

To calculate the total R value from R values of the materials used, simply add the R-values of materials. If the result is equal to or greater than the R-value requirements, the combination is acceptable. R-values of some selected materials are shown below :

Table 2 : Thermal Characteristics of Common Floor Protection Materials[19]

MATERIAL	CONDUCTIVITY (K) PER INCH	RESISTANCE (R) PER INCH THICKNESS
Micore® 160	0.39	2.54
Micore® 300	0.49	2.06
Durock®	1.92	0.52
Promafour		
Hardibacker®	1.95	0.51
Hardibacker® 500	2.3	0.44
Wonderboard®	3.23	0.31
Cement mortar	5.00	0.2
Common brick	5.00	0.2
Face brick	9.00	0.11
Marble	14.3 – 20.00	0.07 – 0.05
Ceramic tile	12.5	0.008
Concrete	1.050	0.950
Mineral wool insulation	0.320	3.120
Limestone	6.5	0.153
Ceramic board (Fibremax)	0.450	2.2

Example:

Required floor protection R of 1.00. Proposed materials: four inches of brick and one inch of Durock® board.

Four inches of brick (R = 4 x 0,2 = 0,8) plus 1 inch of Durock® (R = 1 x 0.52 = 0.52).

0.8 + 0.52 = 1.32.

This R value is larger than the required 1.00 and is therefore acceptable.

In the case of a known K and thickness of alternative materials to be used in combination, convert all K values to R by dividing the thickness of each material by its K value. Add R values of the proposed materials as shown in the previous example.

Common brick K value = 5
Thickness = 4"
R value = Thickness/K = 4/5 = 0.8

Durock K value =1.92
Thickness = 1"
R value = Thickness/K = 1/1.92 = 0.52

Total R value = .8 + 0.52 = 1.32

[19] Information as reported by manufacturers and other resources

8.7 Facing

Non combustible finishing materials such as brick or ceramic can be glued to the facade of the fireplace. Do not put a seal between the faceplate and the finishing material to facilitate removal of the facaplate, if necessary.

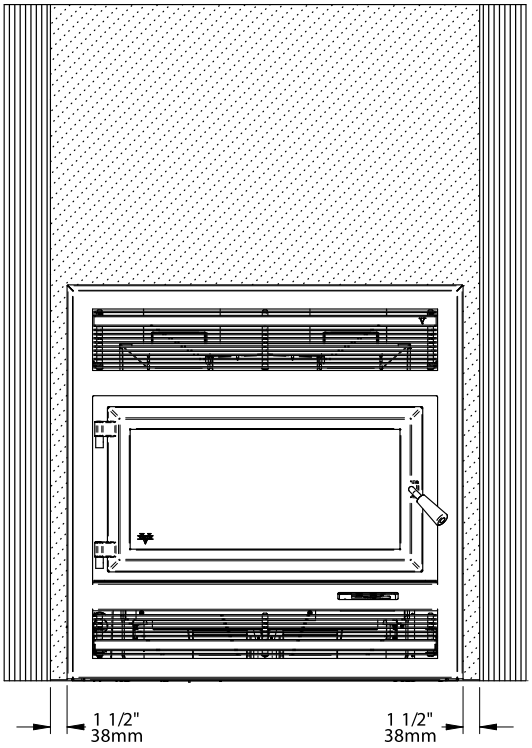

Combustibles materials allowed in this zone

Non combustible material only in this zone

8.8 Combustible Shelf Installation

A combustible shelf with a depth of 6" (152 mm) **(C)** can be installed at least 58" (1,47 m) **(B)** from the base of the fireplace.

Different shelf sizes are listed in the following table.

POSITIONING AND DEPTH OF THE THE SHELF	
B	**C**
58" (1,47 m)	6" (152 mm)
60" (1,52 m)	8" (203 mm)
62" (1,58 m)	10" (254 mm)
64" (1,63 m)	12" (305 mm)

For a shelf dimension that does not appear in the table, add 52" (1,32 m) to the depth of the shelf to find the safe position of the shelf. The height **(A)** should always be 80" (2.03 m) from the base of the fireplace.

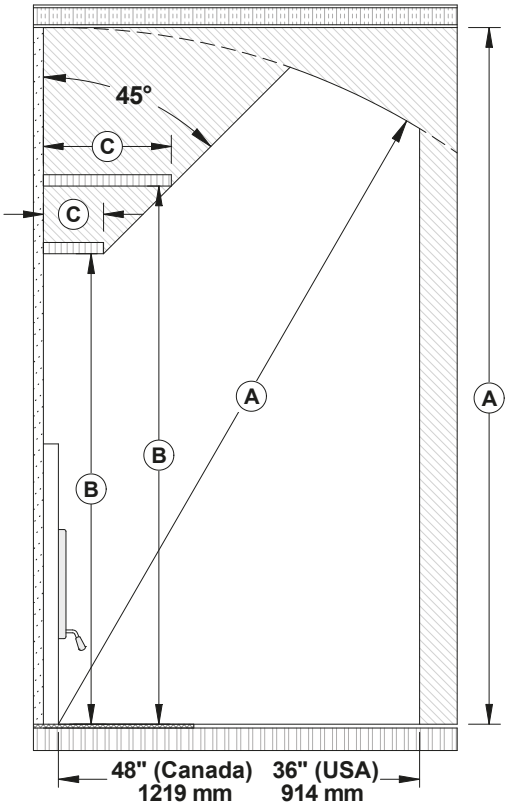

8.9 Heat Shield for Combustible Shelf

It is possible to reduce the minimum height required between the floor and a combustible shelf by installing an optional heat shield.

Different shelf sizes are listed in the following table.

POSITIONING AND DEPTH OF THE THE SHELF	
B	**C**
50" (1,27 m)	6" (152 mm)
52" (1,32 m)	8" (203 mm)
54" (1,37 m)	10" (254 mm)
56" (1,42 m)	12" (305 mm)

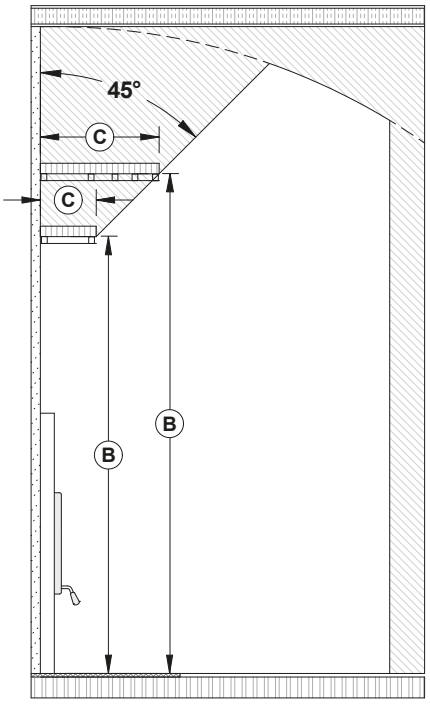

8.10 Non combustible Shelf Installation

It is possible to install a non-combustible shelf of 6" to 12" above the fireplace. It must be installed at least 48" (1,22 m) from the base of the fireplace. **The shelf will be hot. Do not put combustible materials on the shelf.**

9. The Venting System

The venting system acts as the engine that drives the wood heating system. Even the best fireplace will not function safely and efficiently as intended if it is not connected to a suitable chimney. The heat in the flue gases that pass from the fireplace into the chimney is not waste heat. This heat is what the chimney uses to make the draft that draws in combustion air, keeps smoke inside the fireplace and safely vents exhaust to outside. Heat in the flue gas can be seen as the fuel the chimney uses to make draft.

9.1 Location

The location of the chimney is crucial for the proper functioning of the appliance. The chimney should be installed within the house rather than up an outside wall and should rise straight up through the tallest part of the house. This installation benefits from being enclosed within the warm house environment, produce stronger draft, accumulate fewer creosote deposits and will be unaffected by cold temperatures or harsh winds.

Outside chimneys will lead to cold back drafting when there is no fire in the fireplace, slow kindling of new fires, and smoke roll-out when the door is open for loading.

9.2 Supply of Combustion Air

The safest and most reliable supply of combustion air for a fireplace is from the room in which it is installed. Room air is already preheated so it will not chill the fire, and its availability is not affected by wind pressures on the house. The only case in which the fireplace may not have adequate access to combustion air is if the operation of a powerful exhaust device (such as a kitchen range exhaust) causes the pressure in the house to become negative relative to outdoors.

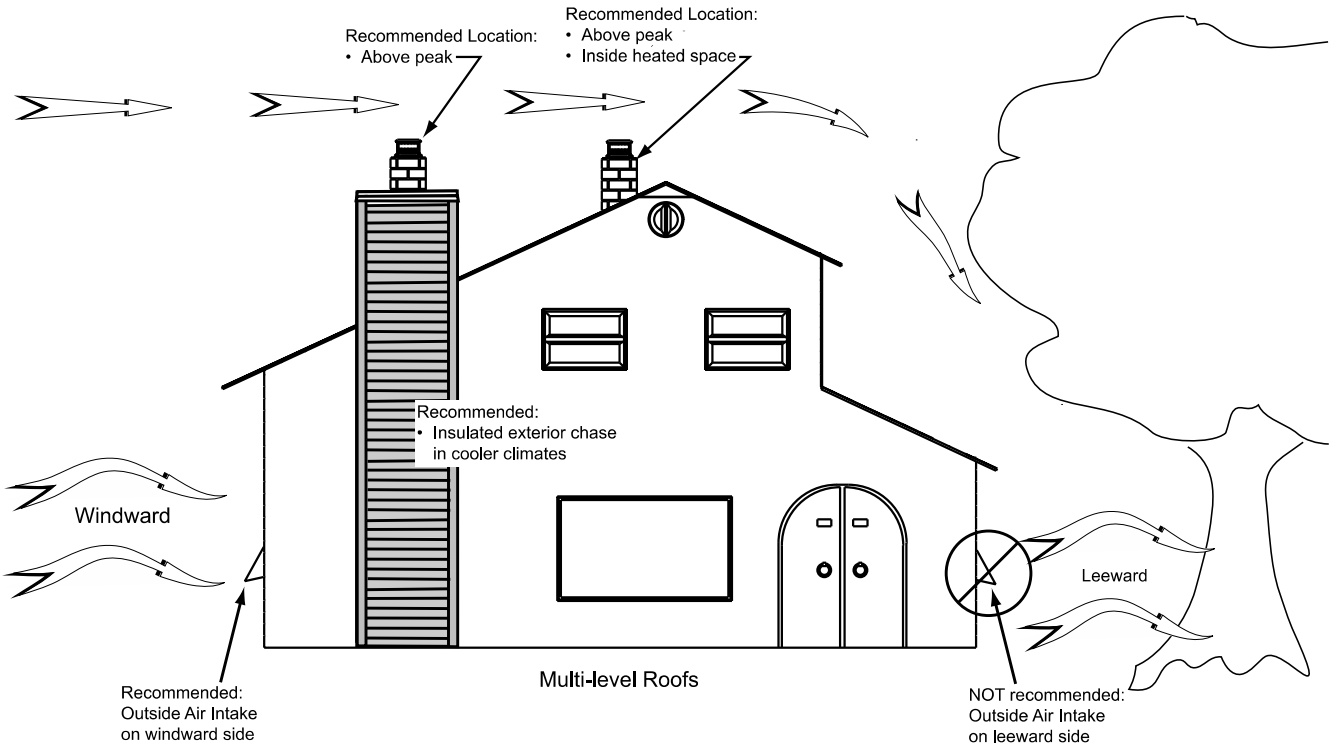

9.3 Chimney Installation

The chimney manufacturer's installation manual takes precedence over the following installation instructions. To ensure a safe installation, please refer to it. Some non-illustrated parts may be required.

9.3.1 General Advices

- This wood burning fireplace has optimum performance and efficiency when connected to a **chimney** with a **6" (150 mm) diameter flue**, only the chimneys listed in the «"Table 4 : Approved Chimneys" can be used.
- To insure a good draft, it is recommended to have a length of 18" (457 mm) from the top of the unit to the first offset. However, starting using a 30° or 45° (Canada Only) elbow is also approved.
- **A CHIMNEY VENTING A FIREPLACE SHALL NOT VENT ANY OTHER APPLIANCE.**
- The **minimum height of the chimney** system is **15 feet (4.6 m)** from the base of the appliance to the chimney cap. If only the minimum height of the chimney system is installed, the operating conditions must be optimal (interior chimney, minimum height of 18" (457 mm) before any deviation, etc.).

- The **chimney** must have **at least one support**. The maximum chimney length that should be supported by the fireplace is 9 feet (2.75 m) for 2" Solid Pack chimney (5 cm) and 12 feet (3.7 m) for 1" Solid Pack chimney.
- The chimney must extend at least 3 ft. (92 cm) above its point of contact with the roof and at least 2 ft. (61 cm) higher than any wall, roof or building within 10 ft. (3.1 m) of it.
- **WARNING : IF THE CHIMNEY IS INSTALLED IN A CHASE, IT MUST EXCEED THE TOP OF IT BY AT LEAST 3 FEET (92 CM) IF IT'S MADE OF COMBUSTIBLE MATERIALS OR AT LEAST 1.5 FEET (46 CM) WHEN IT IS MADE OF NON-COMBUSTIBLE MATERIALS.**

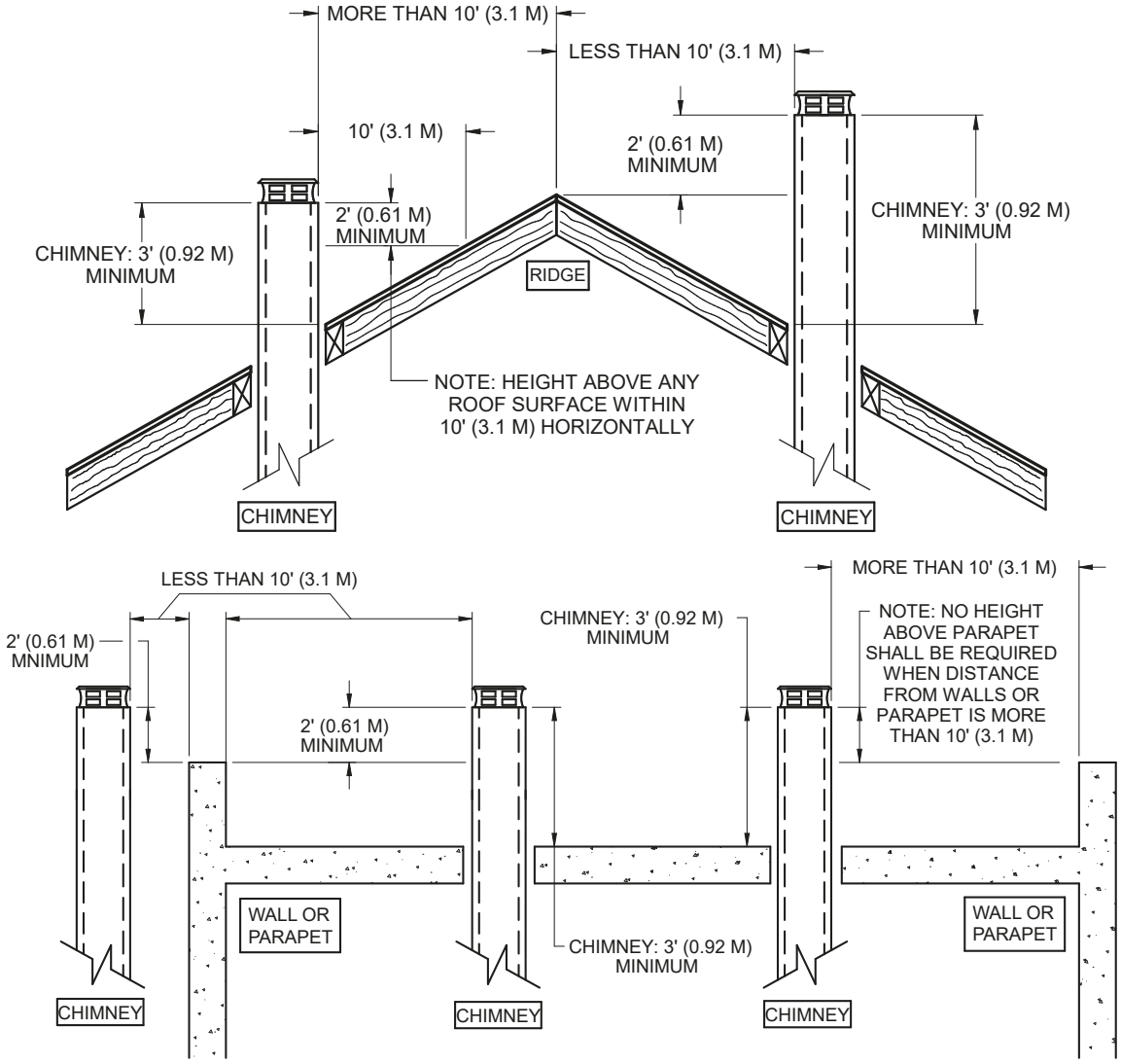

- Avoid deviations as much as possible, especially the sharp ones. Each deviation adds restriction to the system and can lead to draft problems.
- If the chimney extends higher than 5 ft. (1.5 m) above its point of contact with the roof, it must be secured using a roof brace.
- A rain cap must be installed on top of the chimney.
- Cut and frame square holes in all floors, ceilings, and roof that the chimney will go through to provide a 2" (50 mm) minimum clearance between the chimney and any combustible materials. Do not fill this 2" space with insulation or any other combustible material.

- A clearance of 2" (50 mm) between the chimney and any combustible material is required. This space must remain free, without insulation or other combustible material.The parts of the chimney that pass into inhabited spaces must be enclosed in an enclosure.
- For installations where more than one chimney is located in the same non-chase or within the same area, their terminations must be separated by at least 16" (410 mm) horizontally, and 18" (460 mm) vertically. This separation is to prevent smoke migrating from one chimney to another.

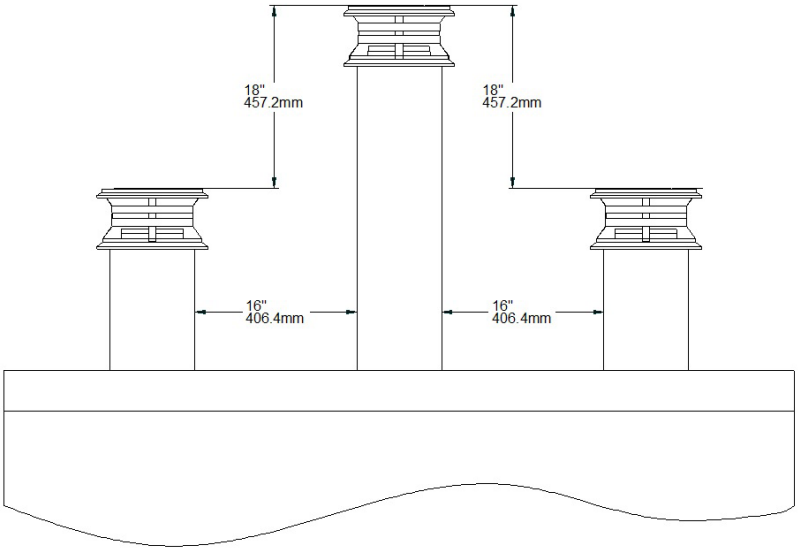

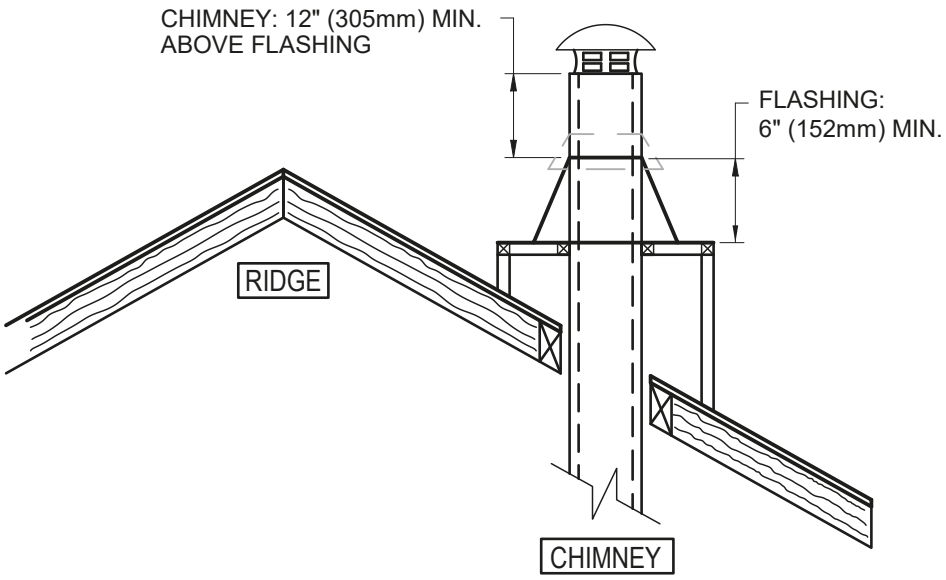

Note: The chimney chase on the roof must be the same size as the flashing.

WARNING: IF THE CHIMNEY IS INSTALLED IN AN ENCLOSURE ABOVE THE ROOF, IT MUST EXCEED THE TOP OF THE FLASHING CONE BY AT LEAST 12 INCHES (30 CM). THE FLASHING MUST HAVE A MINIMUM HEIGHT OF 6 INCHES (15.25CM). THE TOP OF THE ENCLOSURE MUST BE MADE OF NON-COMBUSTIBLE MATERIALS.

- Cut and frame square holes in all floors, ceilings, and roof that the chimney will go through to provide a 2" (50 mm) minimum clearance between the chimney and any combustible materials. Do not fill this 2" space with insulation or any other combustible material.

- In all cases, the chimney must start with a 6" diameter anchor plate attached to the fireplace.

- If the male anchor plate nozzle exceeds 2" (50 mm) in length **(A)**, it must be cut above the lifting hooks welded inside the flue outlet so that it is sitting perfectly on the top of the fireplace.

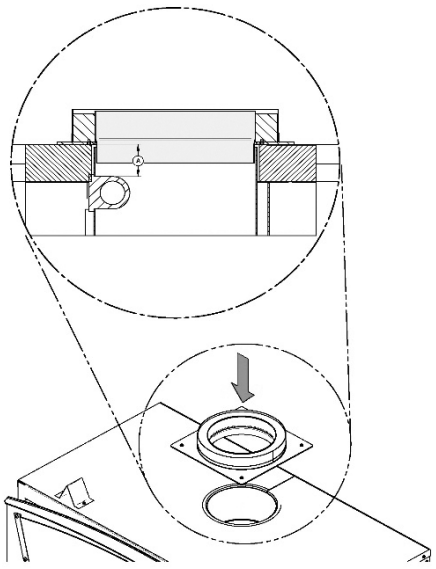

- *Ceiling Supported Installation*

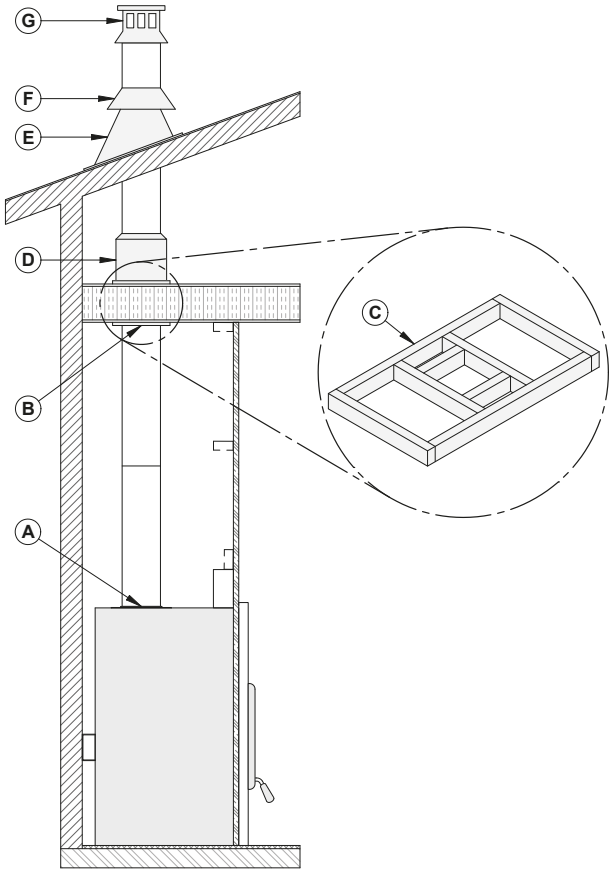

A : Anchor plate

B: Ceiling support

C: Framing opening

D: Attic insulation shield

E: Roof flashing

F: Storm collar

G: Chimney cap

1. Cut and frame square openings **(C)** in the ceiling, floor and roof where the chimney will pass. A 2" clearance must be maintained between the chimney and any combustible materials. The 2" space must remain empty, without insulation or any other combustible material. The size of the floor and ceiling holes must be in accordance with the chimney manufacturer's instructions.

2. From underneath the ceiling, install a ceiling support **(B)** in each floor where the chimney will pass. In the attic, install an attic radiation shield from above **(D)**.

3. Install an anchor plate **(A)** and a first chimney section on the fireplace. Install the number of chimney sections needed, making sure to lock each section in place.

4. When the desired height of the chimney is reached, install a roof support (not shown).

5. Put the roof flashing **(E)** in place and seal the joint between the roof and the flashing with roof sealant. For sloping roofs, place the flashing under the upper shingles and on top of the lower shingles. Nail the flashing to the roof, using roofing nails.

> When a ventilated roof flashing is installed, precautions are to be taken not to caulk or seal the ventilating openings.

6. Place the storm collar **(F)** on the roof flashing and tighten it with the bolt. Seal the joint between the storm collar and the chimney, using silicone sealant.

7. Install the chimney cap **(G)**.

- *Offset Installation*

1. Follow the instructions for a ceiling supported installation until the first elbow.

2. Install and turn the elbow in the right direction. Attach to the chimney using three ½" (12 mm) metal screws.

3. Install the appropriate number of chimney sections to obtain the necessary deviation. Secure the chimney sections together with three ½" (12 mm) screws. If the offset section has two or more chimney sections, a bracket must be installed. If the chimney go through a wall, install a wall thimble.

4. Install another elbow to bring the chimney back in a vertical position.

5. Continue the installation following the instructions of the ceiling supported installation.

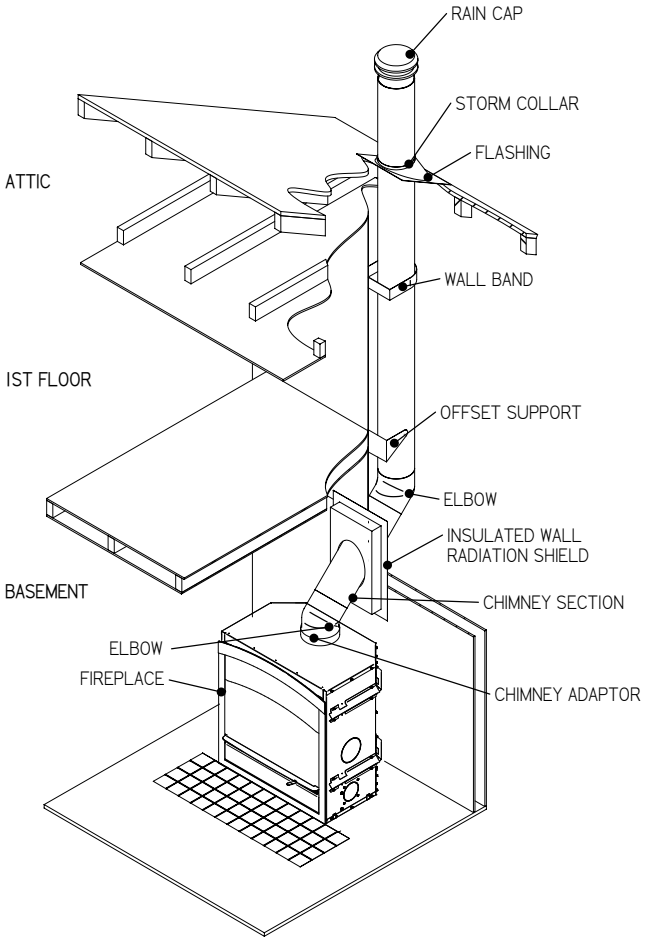

Table 3 : Minimum system height when using elbows

Chimney model	See Table 4
Vertical Installation	15 ft (4,6 m)
Two (2) elbows	15 ft(4,6 m)
Four (4) elbows	17 ft (5,2 m)

9.3.2 Masonry Chimney Installation

The masonry chimney must meet the minimum requirements of the local building code or equivalent for a safe installation. Contact a building inspector to learn about the requirements in the area.

Before starting the installation, the masonry chimney should be inspected for cracks, crumbling mortar, creosote layers, obstructions or other signs of deterioration. If signs of deterioration are noted, the chimney should be repaired and cleaned before installation.

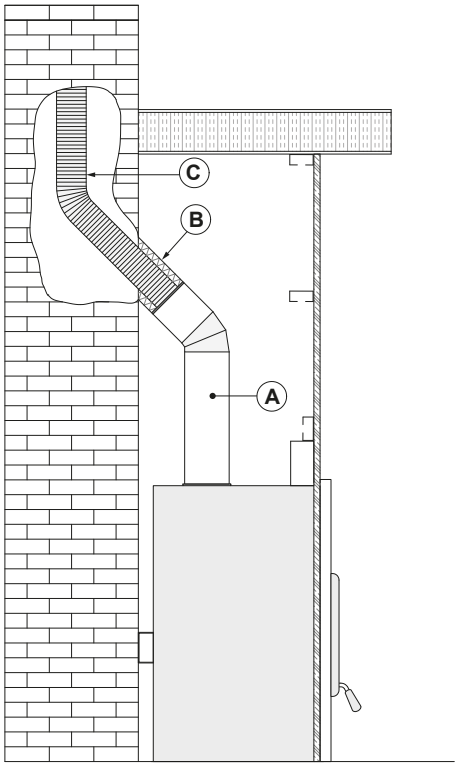

1. Position the fireplace in its location. Temporarily install the elbow or chimney section **(A)** on the top of the fireplace and, using a level, mark with an oval the location where the flue liner will enter the masonry chimney.
2. Mark where the flue will pass through the masonry chimney. Drill a hole in the masonry chimney to insert an insulated liner adapter **(B).**
3. Lower the liner **(C)** into the chimney to the level of the hole.
4. Slide an insulated 45° or 30° liner adapter and connect it to the liner.
5. Seal the opening around the liner with high temperature refractory cement.
6. Then, follow the chimney manufacturer's instructions to connect the extended liner section to the special chimney connector.

The liner must extend at least 12" (30 cm) above the masonry chimney.

9.4 Angled Wall Pass-Thru Installation

When passing through a combustible wall with the chimney at a 30° or 45° angle (Canada only), an angled wall pass-thru must be installed. Follow the chimney manufacturer's installation instructions.

In cold climate locations, it is recommended to use the insulated wall pass-thru to maintain the home's thermal barrier.

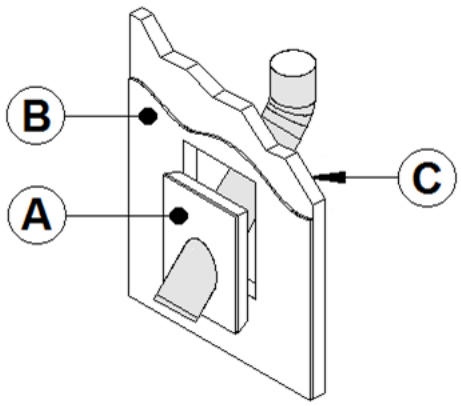

A	Wall pass-thru	C	Exterior wall
B	Interior wall		

9.5 Chimney Support Installation

9.5.1 Roof Support

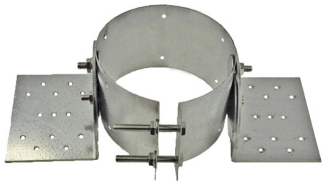

The universal roof support can be used on:

- a roof to support the chimney;
- a floor, ceiling, or roof over an offset to support the chimney or;
- as additional support.

Always follow the manufacturer's instructions for the maximum chimney height that can be supported by the support.



9.5.2 Offset Support

This support is used above a chimney offset. When the offset of the chimney pass through a wall, this support can be installed on the wall to support the chimney.

9.6 Approved Chimneys

Table 4 : Approved Chimneys

CHIMNEY MANUFACTURER	MODEL	TYPE	DIAMETER
Olympia Chimney SBI Venting Division	Ventis	1" Solid Pack	6" (20 cm)
SBI Venting Division	Nexvent	1" Solid Pack	6" (20 cm)
Olympia Chimney	Champion Chimney System	1" Solid Pack	6" (20 cm)
Olympia Chimney	Rockford Chimney Systems	1" Solid Pack	6" (20 cm)
DuraVent	Dura Tech	1" Solid Pack	6" (20 cm)
DuraVent	Dura Tech Canada (DTC)	1" Solid Pack	6" (20 cm)
DuraVent	DuraPlus HTC	2 "Solid Pack	6" (20 cm)
DuraVent	Dura Tech Premium	2" Solid Pack	6" (20 cm)
DuraVent	Dura Plus	AC Triple Wall	6" (20 cm)

Table 5 : LIST OF MANDATORY COMPONENTS

CHIMNEY MANUFACTURER	MANDATORY COMPONENTS	TYPE/MODEL
Olympia Chimney / SBI Venting Division	• Ventilated roof flashing.	1" Solid Pack: Ventis, Nexvent, Champion Chimney System, Rockford Chimney Systems
DuraVent	• Ventilated roof flashing.	1" Solid Pack: Dura Tech, Dura Tech Canada DTC 2" Solid Pack: Dura Tech Premium

9.6.1 Rafter protection

Rafter protectors, at the roof level, must be installed with this unit, if the chimney is enclosed at the attic level. Rafter protectors must be made of 22 ga or more galvanized steel and must have at least the dimension presented on the following diagram:

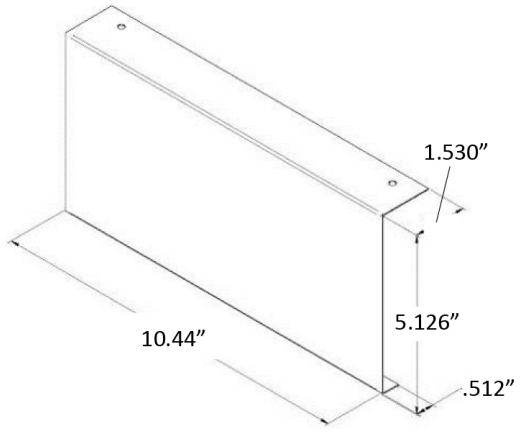

APPENDIX 1: FACEPLATE AND LOUVERS INSTALLATION

A faceplate must be installed on this fireplace. See the faceplate installation manual for more details.

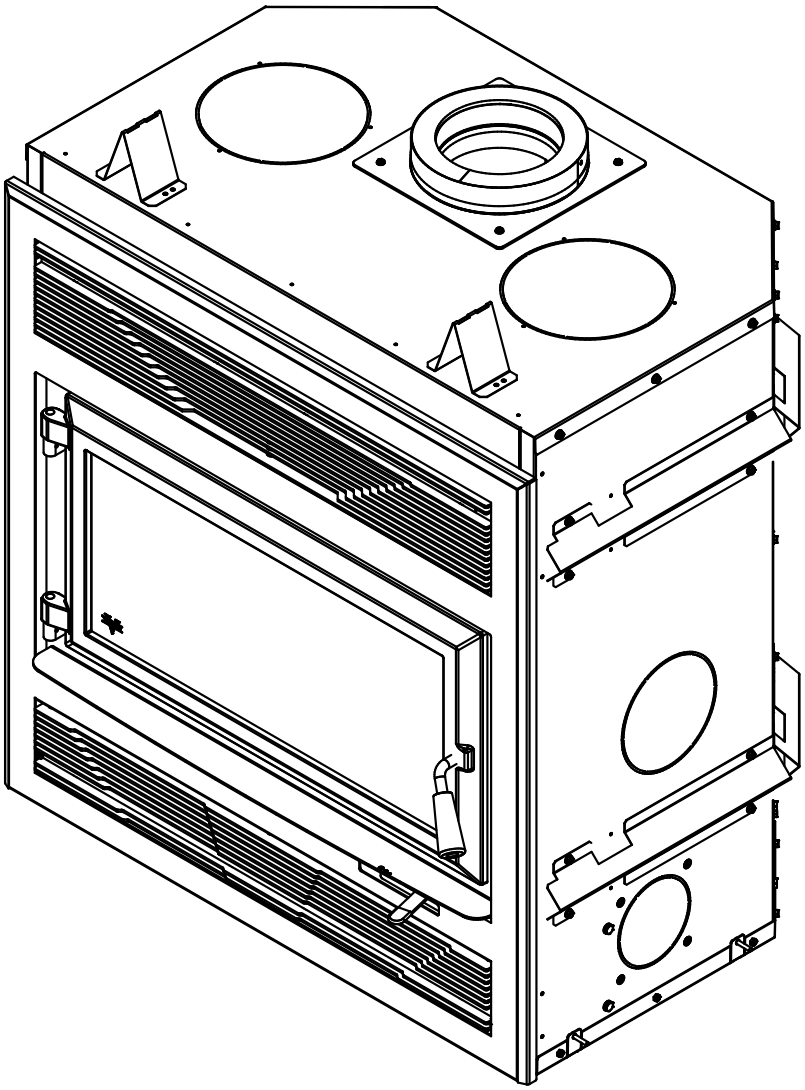

APPENDIX 2: OPTIONAL FRESH AIR INTAKE INSTALLATION

Follow the instructions below for connecting the fireplace to a fresh air intake:

- The insulated flexible pipe **(D)** should be of sufficient length (at least 10') and of a configuration to prevent condensation.
- The outside wall register **(E)** must not be installed:
  - More than 50% of the total height of the chimney;
  - At more than 10' (3 m) above the base of the fireplace;
  - More than 3' (0.9 m) below the base of the fireplace.
- The fresh air must come from outside the house. The air intake should not take air in the attic, basement or garage.
- The duct and the air intake can be installed above or below the floor level.

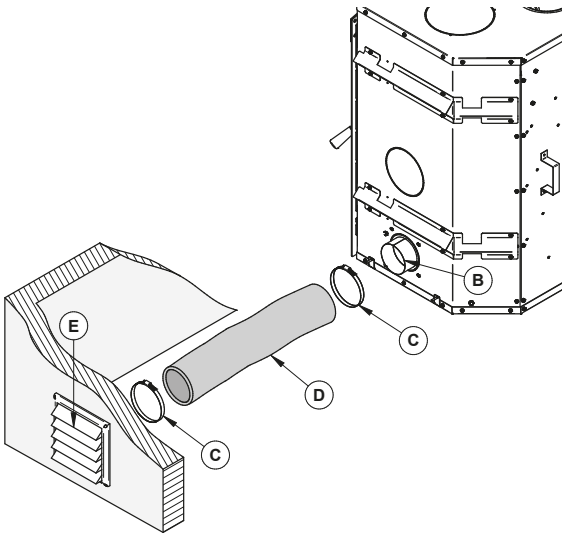

- The air intake should be installed high enough not to be obstructed by snow. It should be protected from the wind, away from automobile exhaust, a gas meter or other air inlets or outlets.

The following items are included with the fireplace:

- One (1) 4" (76 mm) adapter **(B)**;
- One (1) air intake plate;
- Four (4) screws.

The following items are not included:

- The outside wall register **(E)**;
- The two (2) adjustable collars **(C)**;
- Insulated duct length 4" **(D)**. (Duct must be HVAC type and must comply with ULC S110 or UL 181, Class 0 or Class 1 and must withstand temperatures up to 250° F).

Note: Only remove the knockout that will be used to connect the fresh air intake assembly.

The fresh air intake can be installed in two different locations on the fireplace. On the right side **(1)** of the fireplace (the most common) or on the right side under the fireplace **(2)**.

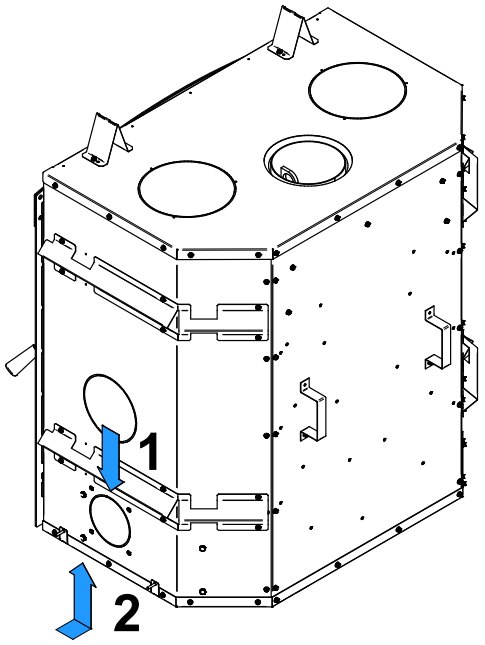

ENGLISH

Installation

It is strongly recommended to wear gloves to complete the installation.

1. To use the air intake on the right side, remove the knockout by cutting the micro-joints. Cut and remove the insulation and the other knockout inside the fireplace **(1)**. To use the opening under the fireplace, only cut the knockout.

2. Install the adapter included in the fireplace **(2)** and align the notch of the adapter **(T)** with the one on the fireplace. Turn the adapter clockwise.

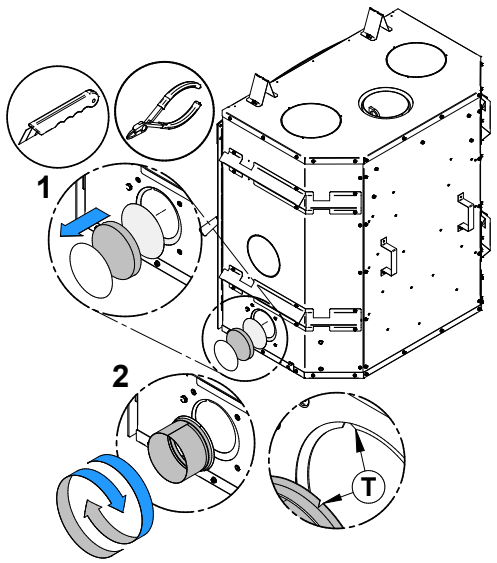

Fresh air intake on the right side

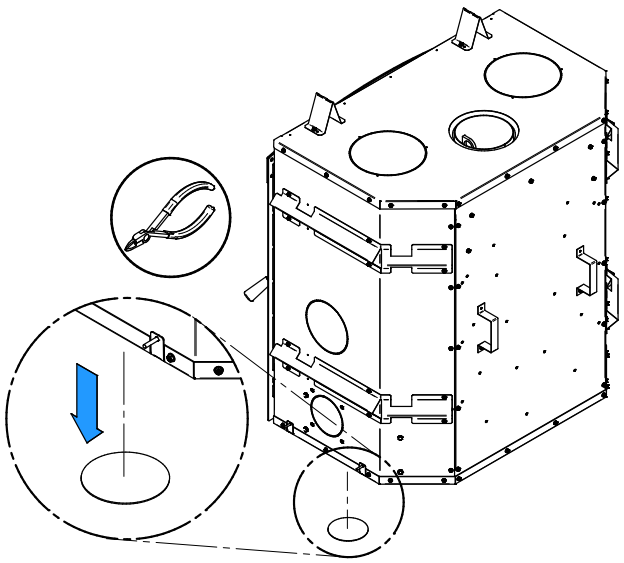

Fresh air intake underneath

3. Lower the bottom decorative louver of the fireplace. Install the plate **(F)** supplied with the fireplace onto the front opening of the air control box. Using a screwdriver, secure with the 4 screws **(G)** found in the user manual. *Installing the plate will make the air intake housing airtight and prevent cold air from entering the fireplace when not in use*.

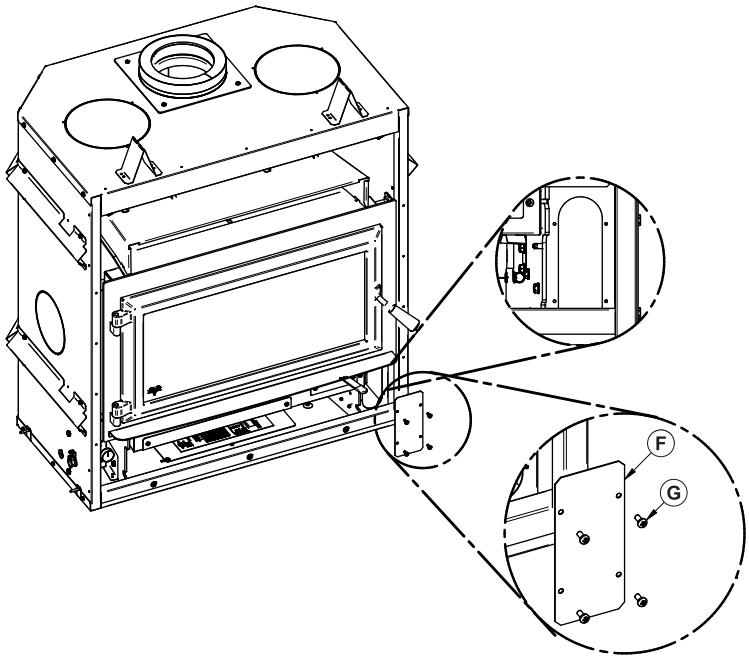

4. Install the flexible duct **(D)** on the fresh air inlet adapter **(B)** using one hose clamp **(C)**. Fix the other end to the outer wall register **(E)** using the second hose clamp **(C)**. The outer wall register **(E)** must be installed outside the house.

   To properly install the flexible duct, gently remove the insulation and plastic wrap to expose the duct. Fix the duct using clamps. Stick aluminum tape around the joint between the duct and adapter to make the connection airtight. Carefully replace the insulation and plastic wrap on the duct. Secure the plastic with aluminum tape.

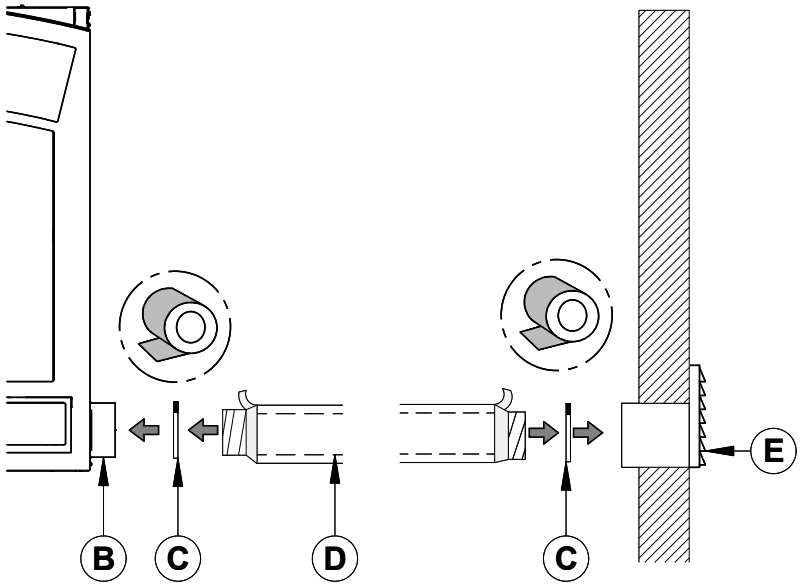

5. To complete the installation, make a hole of ¼" to ½" (6 mm to 13 mm) bigger than the duct diameter on the outside wall of the house at the chosen location. From outside, place the outside wall register in the hole (open side down) and fasten the register to the wall, with screws.

   Use the required length for the installation while respecting the maximum length of 30' (9 m). To avoid condensation, it is recommended to use an insulated duct long enough and containing a «P-Trap» loop. This configuration can be done inside the chase, but must at all times maintain clearances to combustibles.

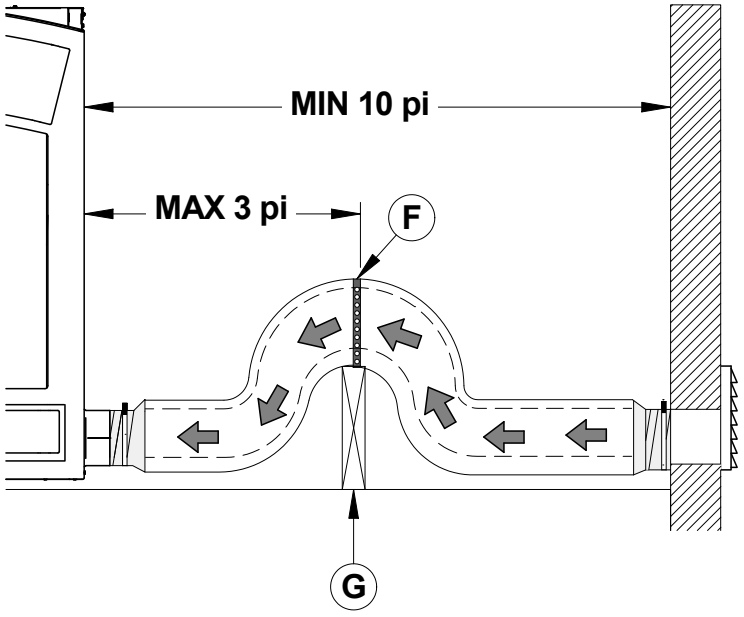

It is strongly recommended to install a mechanical shutter that closes the outside air inlet when the fireplace is not in use.

APPENDIX 3: OPTIONAL TRADITIONAL GRAVITY HOT AIR DISTRIBUTION KIT INSTALLATION

The kit includes:

- 2 hot air outlets (grilles **(A)** and frames **(B)**);
- 2 90º elbows **(C)**;
- 6 steel brackets **(D)** with fastening screws **(E)** and self-tapping screws **(F)**

Parts not included in the kit:

- 8" rigid ducting **(G),** 26 ga, galvanized steel.

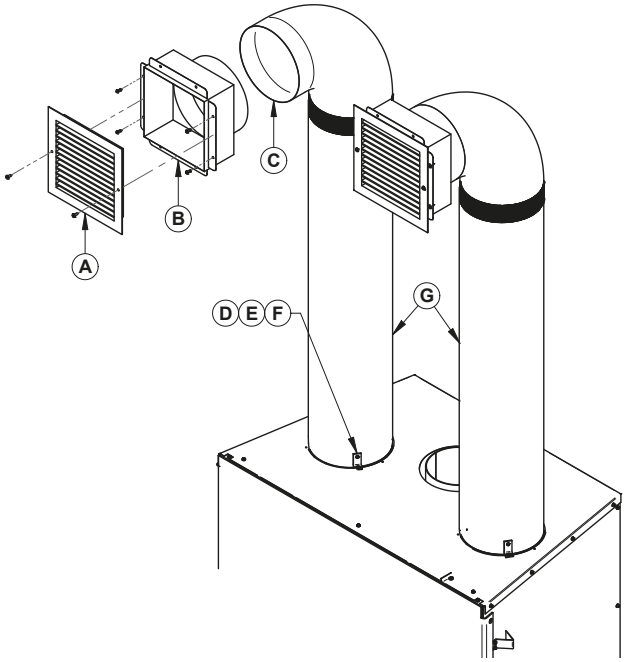

Dimensions of hot air outlet frame with elbow

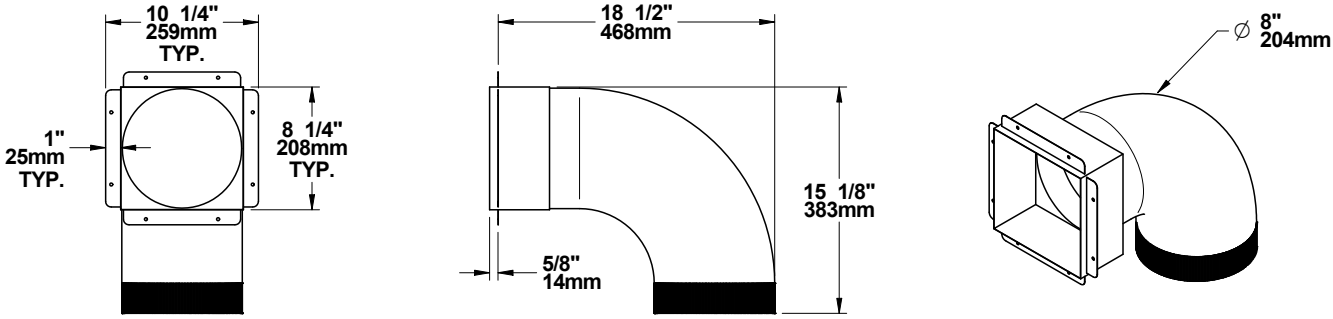

Dimensions of hot air outlet decorative grille with elbow

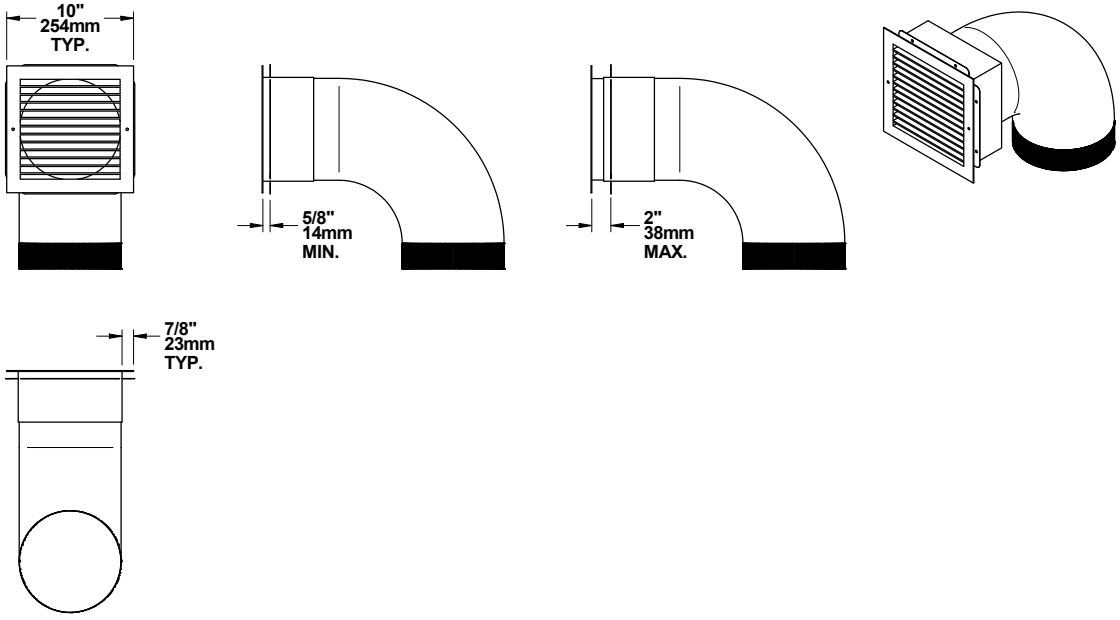

Installation rules and advices

- The minimum height of the hot air duct is 68" (1.7 m). It must be measured from the base of the fireplace to the top of the hot air outlets.
- Do not connect the hot air ducts to a central heating system. The malfunction of the heating system would overheat the fireplace.
- Do not use insulated flexible ducts as they may overheat.
- Do not use «T» fittings or anything other than those listed below.
- All ducts must be placed vertically or horizontally. **Never route the ducting downwards**.
- The flaps of the hot air outlet grills must point down to prevent overheating of the adjacent ceilings.
- Always install both hot air outlet grilles when the gravity air distribution kit is installed.
- The hot air outlets can be installed in the same room as the fireplace, or both can be installed in adjacent rooms or upstairs. If the outputs are installed at different heights, the higher output will draw more heat.
- When forced air kit is installed in conjunction with a gravity kit, the forced air device will draw some of the air from the gravity kit ducting, therefore reducing its efficiency.

Clearances

- Maximum length of pipes including elbows: 10' (3 m)
- The maximum number of elbows allowed per duct is two.
- There shall be a clearance of at least 12" (305 mm) between the hot air outlet frame and a ceiling, side wall or mantel made of flammable material.
- When the duct passes through a wall or floor made of flammable material, a firestop radiation shield (same as the one used for a class A chimney) must be installed in the opening of the wall or floor. There must be a clearance of at least 2" (50 mm) between the ducts and the firestop.

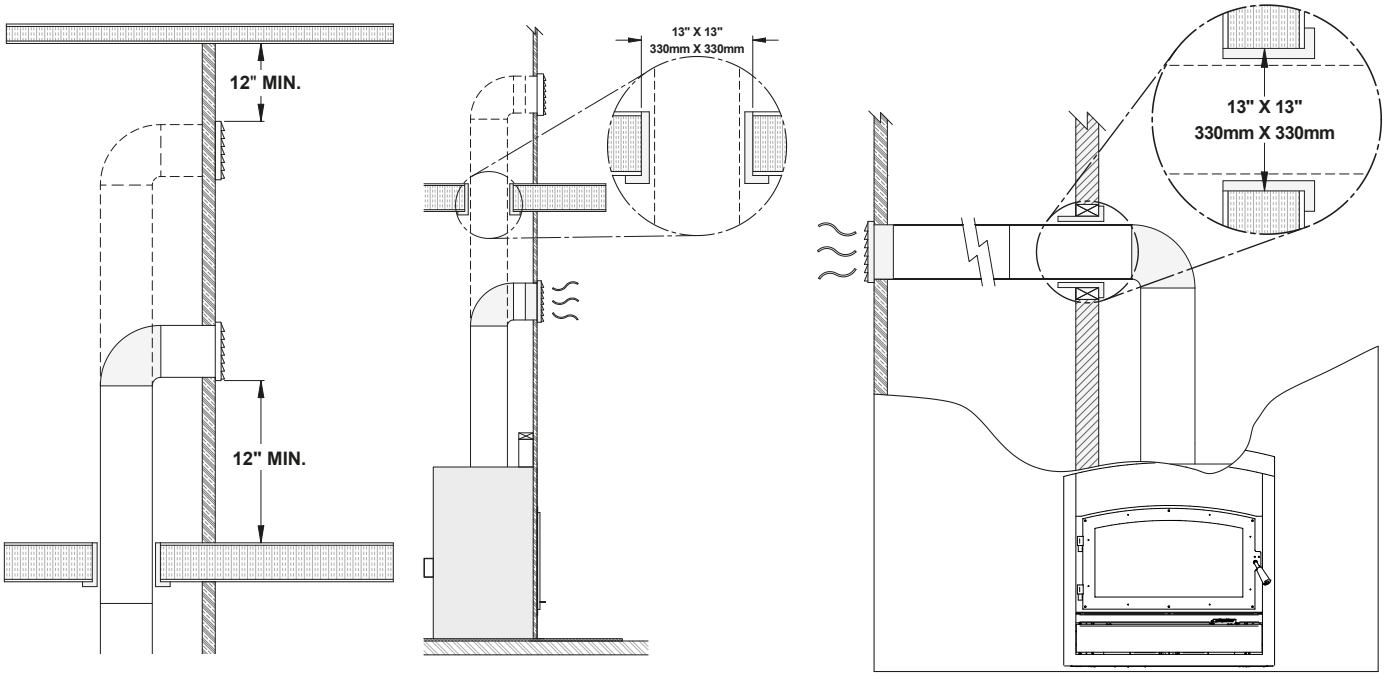

Installation



It is strongly recommended to wear gloves to complete the installation.

A) Remove the knockouts that close the 8" (20 cm) diameter holes on top of the fireplace. Then cut and remove the insulation and the other set of knockouts inside the fireplace.

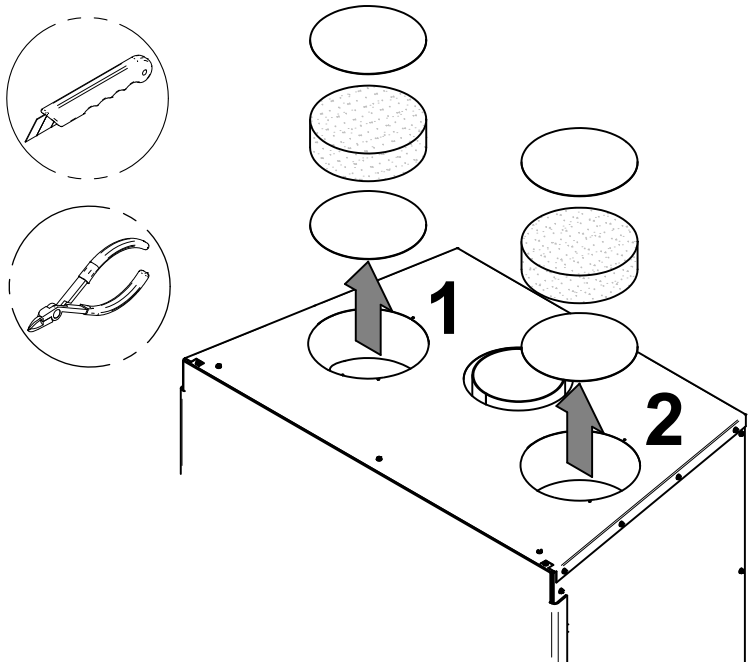

B) Screw the 6 steel brackets **(D)** with 6 screws **(E)** onto the top of the fireplace (3 per duct). Insert the ducts **(G)** (not supplied) into each opening and screw in place in the brackets **(D)** with 6 self-drilling screws **(F)**.

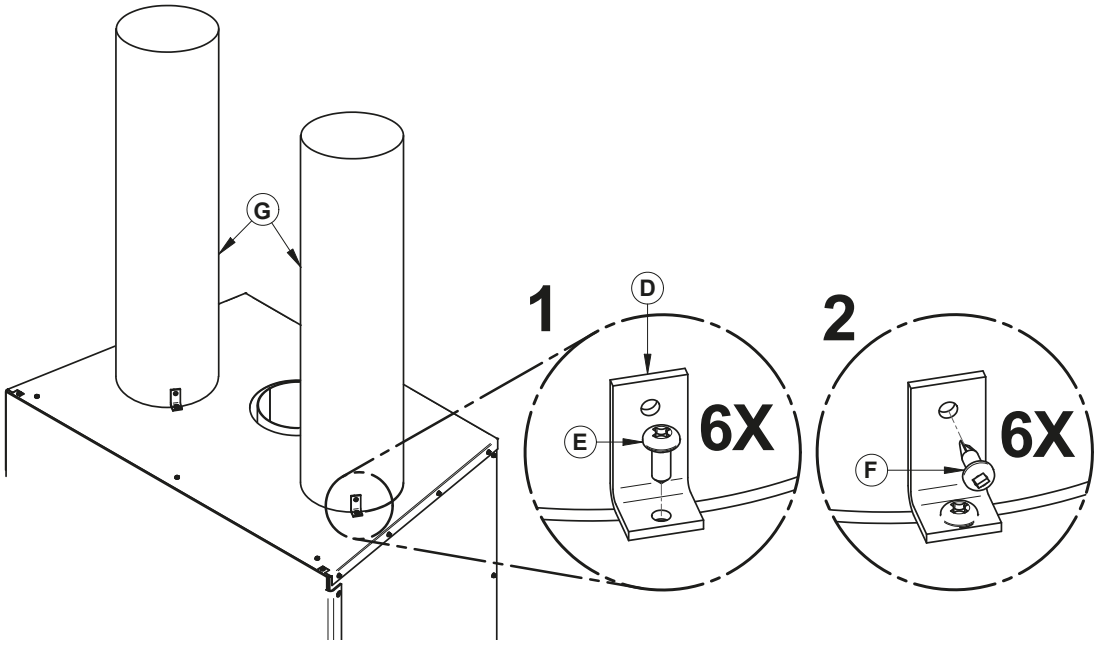

C) Fasten ducts **(G)** to 90 ° elbows **(C)** using self-drilling screws (3 per elbow). Insert the frames **(B)** into the elbow outlets **(C)**. Press the frame on the back of the non-combustible wall and screw it in place. Screw the frame **(B**) to the outlet of the elbow **(C)** with 3 self-drilling screws in each. Attach the decorative grilles **(A)** to the frames with screws.

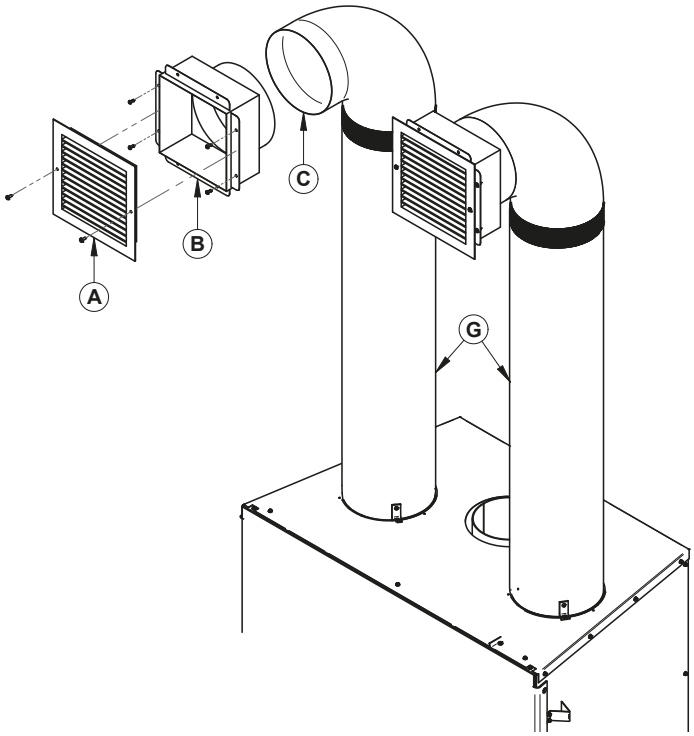

APPENDIX 4: OPTIONAL MODERN GRAVITY HOT AIR DISTRIBUTION KIT INSTALLATION

The kit includes :

- Decorative plate **(A)**;
- Adjustable frame **(B)**;
- Heat distribution box **(C)**;
- Telescoping section **(D)**;
- Anchor plates **(E)**;
- All screws are included.

Not included in the kit:

- 8" rigid ducting, 26 ga, galvanized steel. (if necessary according to the desired height).

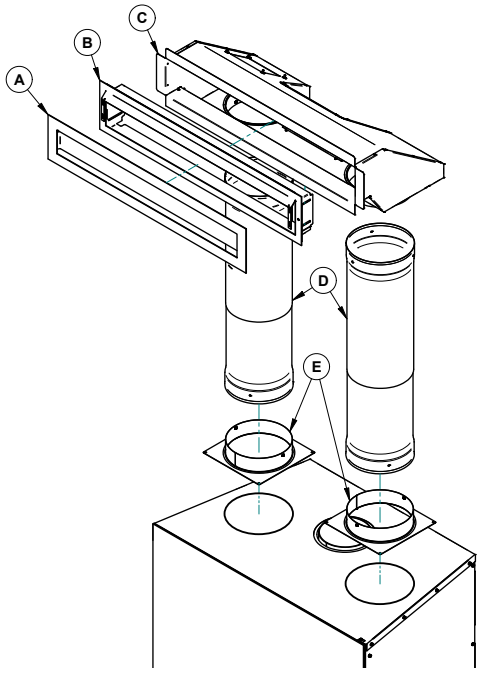

Dimensions of heat distribution box

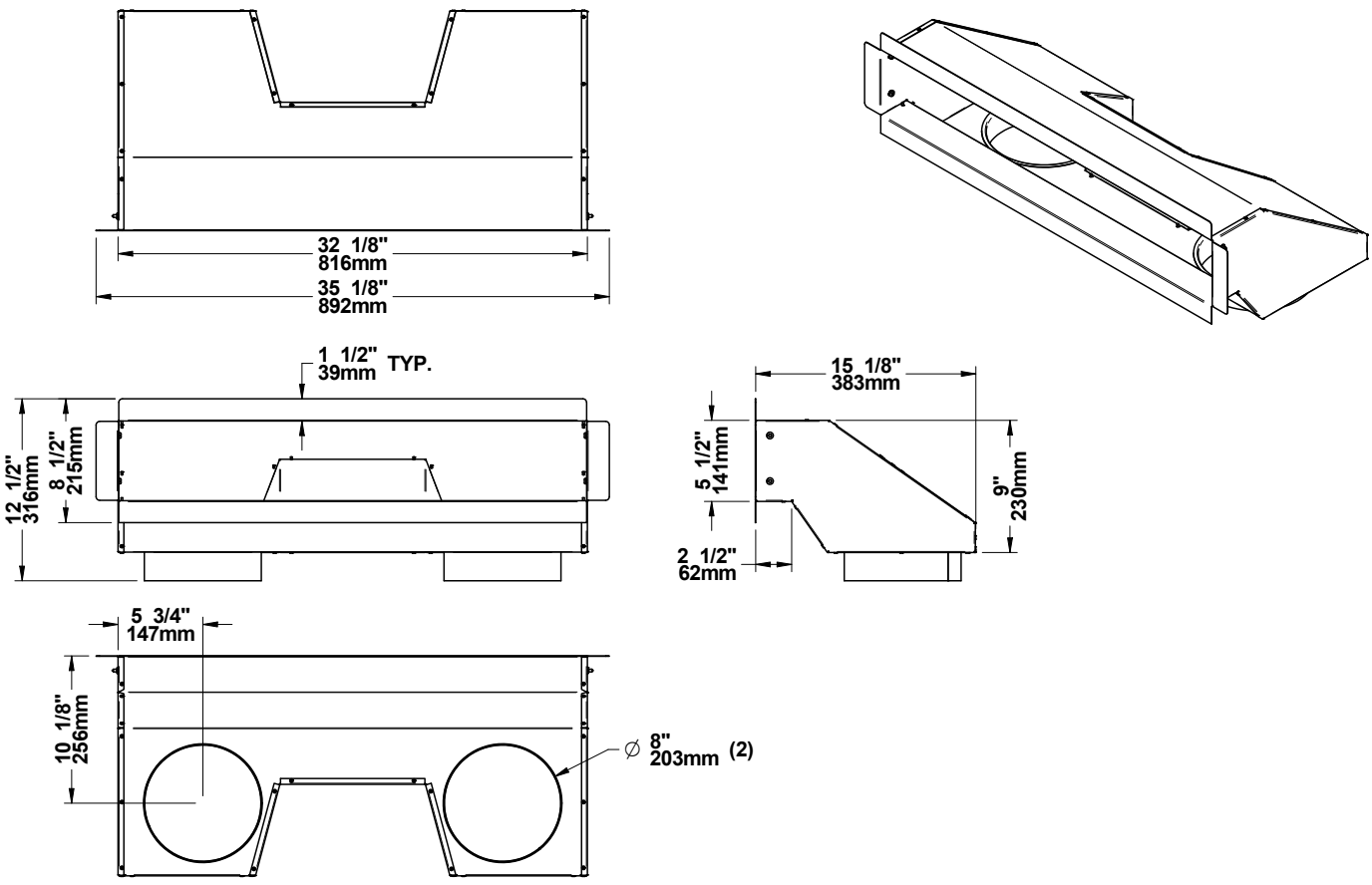

Dimensions of the decorative plate

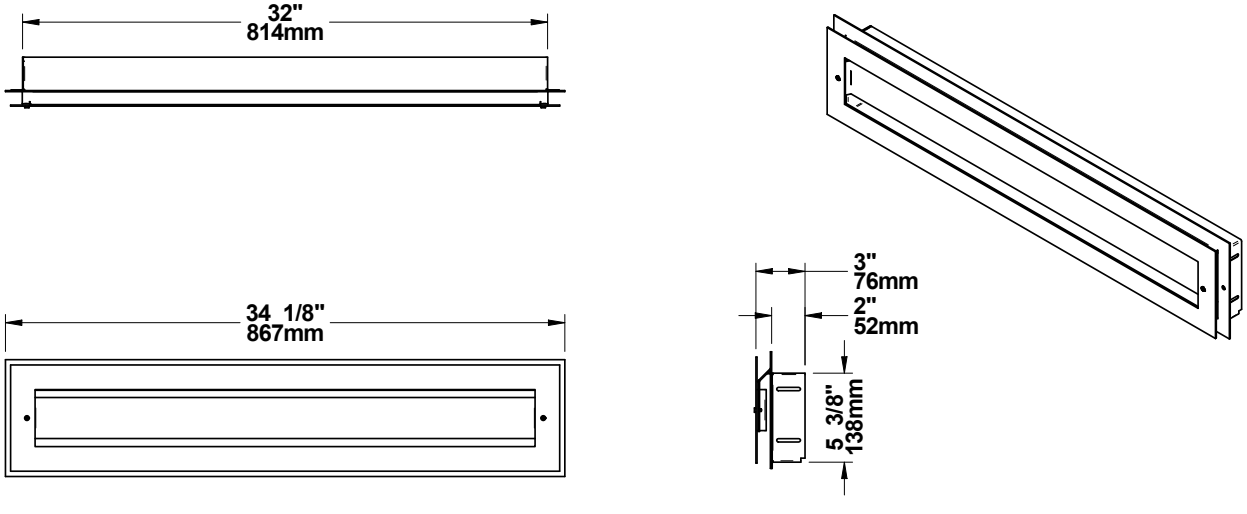

Dimensions of assembled heat distribution box and adjustable decorative plate

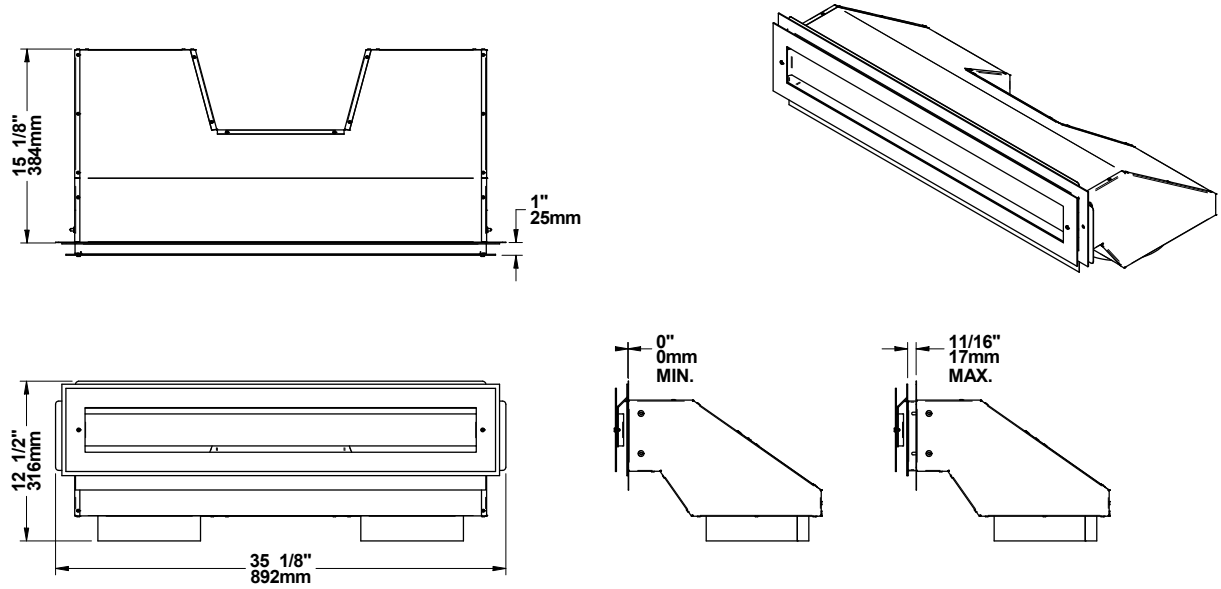

Dimensions of telescoping section

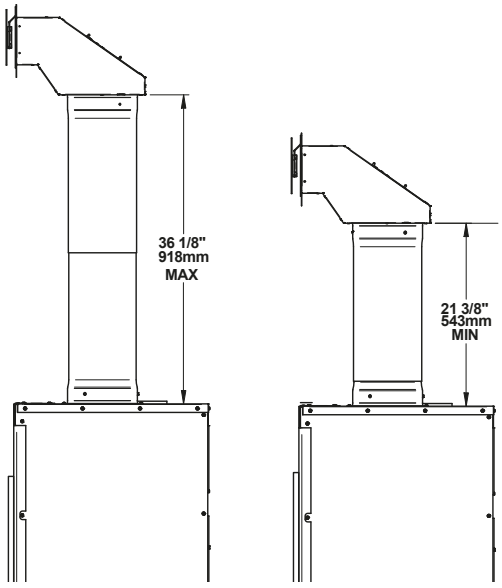

Installation rules and advice

- The minimum height of the hot air duct is 68" (1.7 m). It must be measured from the base of the fireplace to the top of the hot air outlets.
- Do not connect the hot air ducts to a central heating system. The malfunction of the heating system would overheat the fireplace.
- Do not use insulated flexible ducts as they may overheat.
- Do not use «T» fittings or anything other than those listed below.
- The hot air outlets can be installed in the same room as the fireplace or it can be installed in a room upstairs.
- When forced air kit is installed in conjunction with a gravity kit, the forced air device will draw some of the air from the gravity kit ducting, therefore reducing its efficiency.

Clearances

- There shall be a clearance of at least 12" (305 mm) between the hot air outlet frame and a ceiling, side wall or mantle made of flammable material.
- When the duct passes through a wall or floor made of flammable material, a firestop radiation shield (same as the one used for a class A chimney) must be installed in the opening of the wall or floor. There must be a clearance of at least 2" (50 mm) between the ducts and the firestop.

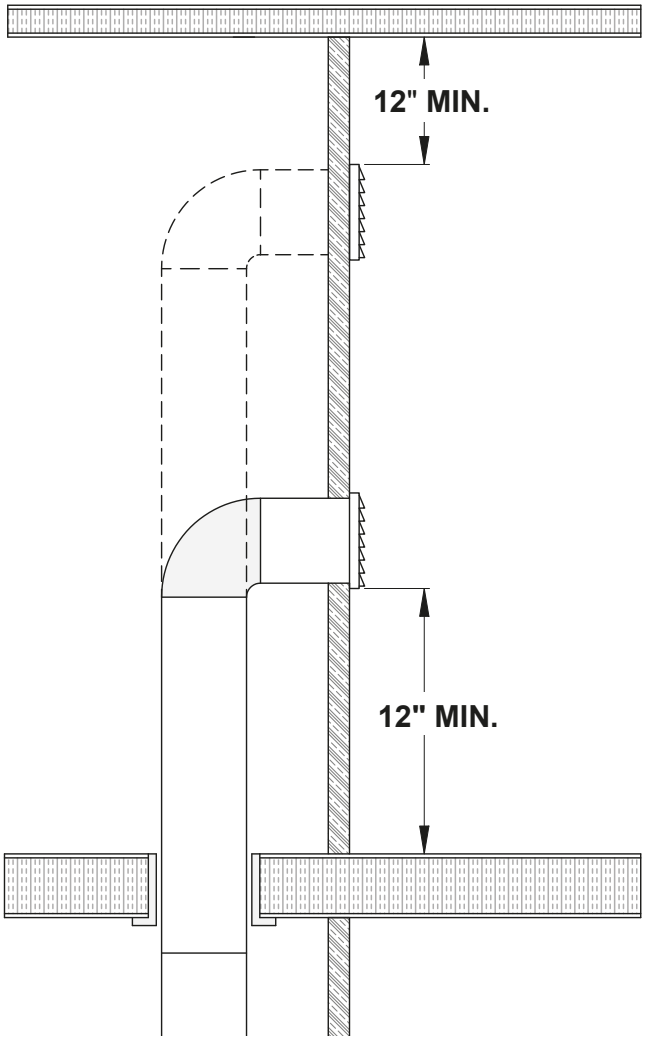

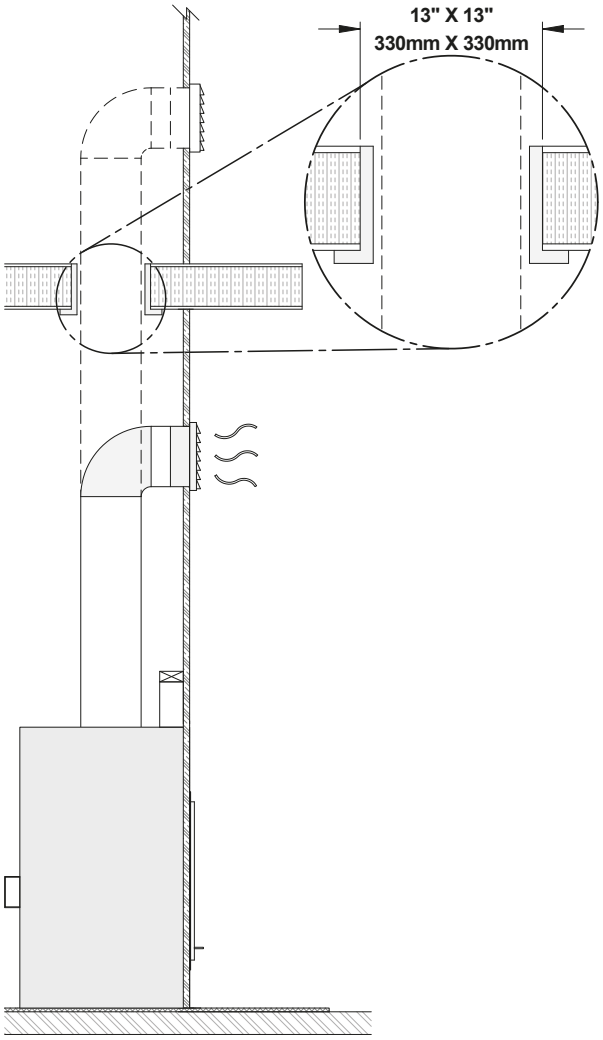

Installation



It is strongly recommended to wear gloves to complete the installation.

A) Remove the knockouts that close the 8" (20 cm) diameter holes on top of the fireplace. Then cut and remove the insulation and the other set of knockouts inside the fireplace.

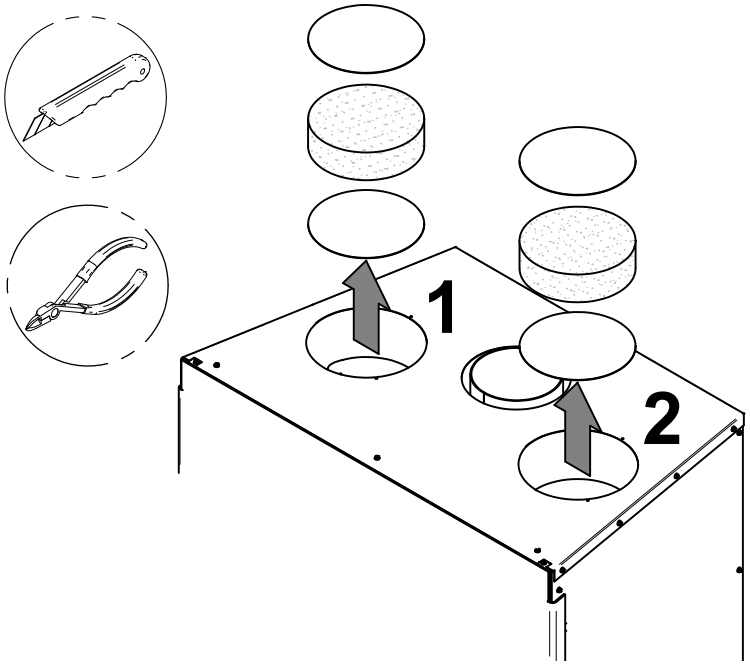

B) Secure the 2 anchor plates **(E)** with 8 screws provided **(F)** on top of the fireplace (4 for each anchor plate). Insert the telescoping section **(D)** into each anchor plate and secure it with 6 other self-tapping screws provided **(G)**.

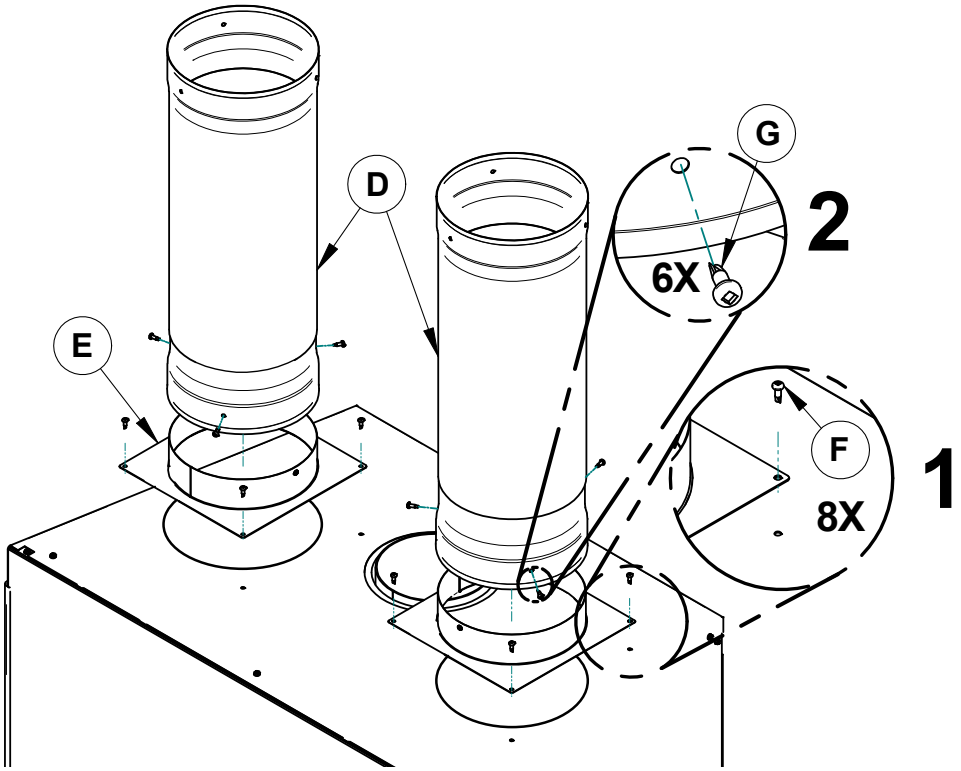

C) Secure the telescoping sections **(D)** to the heat distribution box **(C)** with self-tapping screws **(G)** (3 per telescoping section). Determine the needed height and secure the two parts of the telescoping sections together with 3 self-tapping screws. Insert the adjustable frame **(B)** in the heat distribution box **(C)**, press it against the non-combustible material and secure with 4 screws into the heat distribution box. Set the decorative plate **(A)** to the adjustable frame **(B)**.

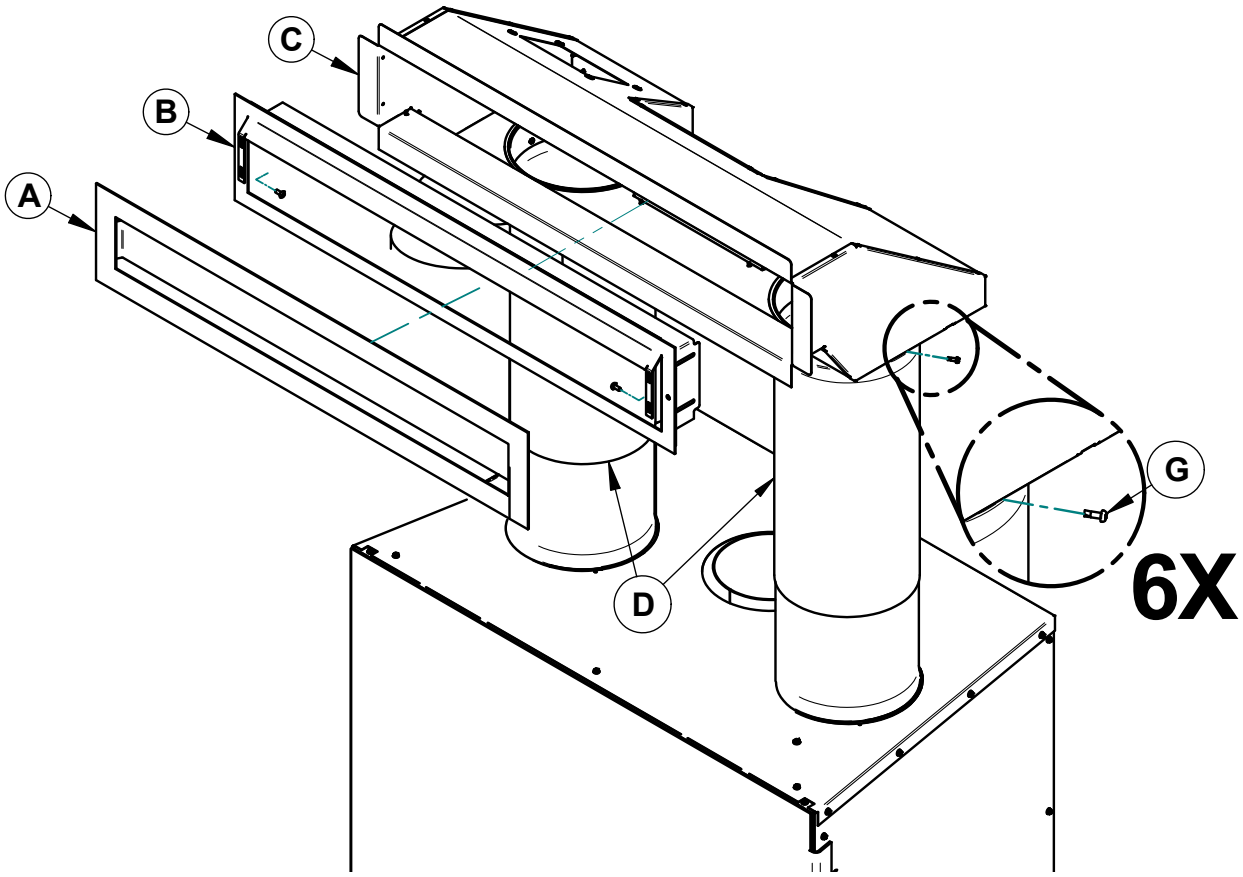

APPENDIX 5: OPTIONAL FORCED AIR DISTRIBUTION KIT INSTALLATION

It is possible to connect a forced air distribution kit[20] on either sides of this fireplace. *Installing the kit on the left side of the fireplace will provide better performances* than on the right side.

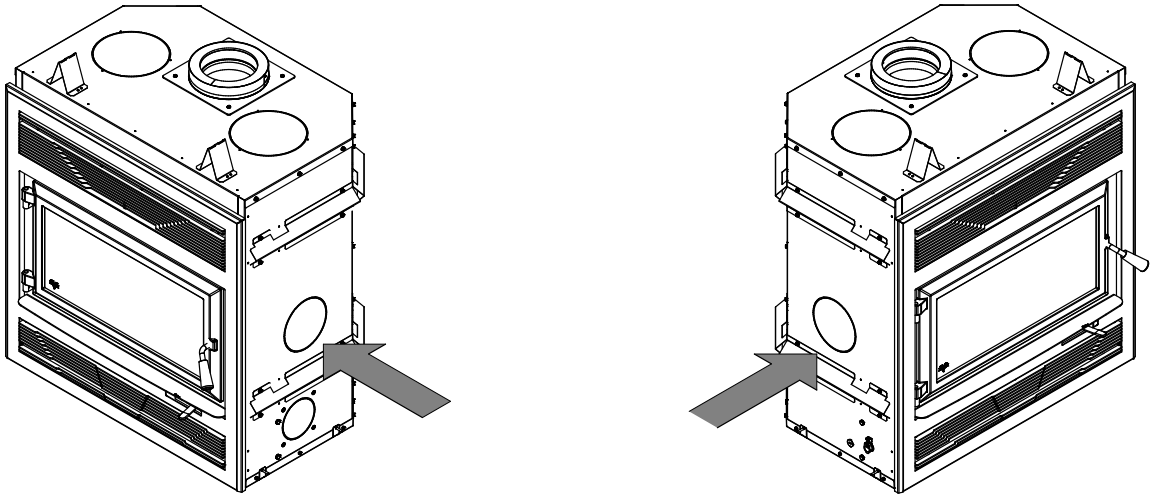

This kit allows distributing heat to another room up to 50 feet (15 m) of the fireplace. The insulated flexible pipe (not included in the kit) must be HVAC type pipe and must comply with ULC S110 and/or UL 181, Class 0 or Class 1 Standards and must withstand temperatures up to 250°F. For the complete installation procedure, see the installation manual provided with the kit.

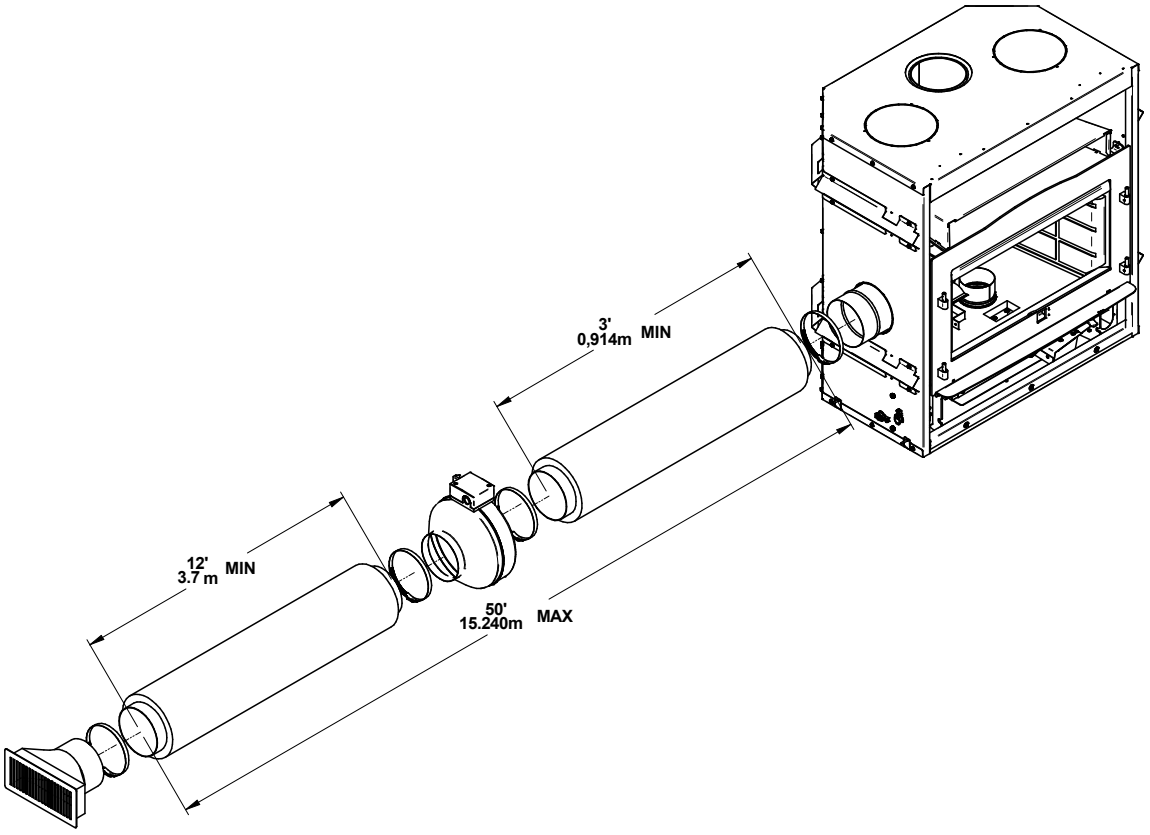

[20] The EPA standard states that it is necessary to perform certification testing with any ventilation that is likely to alter the units' performance. For this reason, SBI has tested the effects of the forced air kit on the emissions of fine particles. Due to the design of the appliance and more specifically to the temperature sensor that is installed to control stops and starts, the forced ait kit does not affect the emission results. In fact, this option promotes the recovery of excess heat to later redistribute it to other rooms. During testing, it was noted that the convection blowers underneath the firebox had more of an effect on the fine particles emission due to the air being directed onto the firebox thus cooling the unit. However, this appliance has already been tested for emission with one or more convection blowers. The environmental requirements are then met efficiently.

APPENDIX 6: OPTIONAL FIRE SCREEN INSTALLATION

In the United States or in provinces with a particulate emissions limit (e.g.: US EPA), the use of open-door wood fireplace with a rigid firescreen is prohibited.

A fire screen door can be installed on the fireplace. For more details, refer to the installation manual supplied with the fire screen.

Warning: Never leave the fireplace unattended while in use with the firescreen.

1. Open the door.

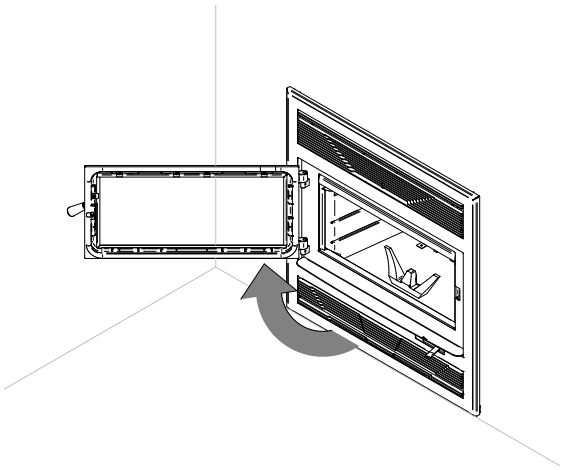

2. Hold the firescreen and bring it close to the door opening.

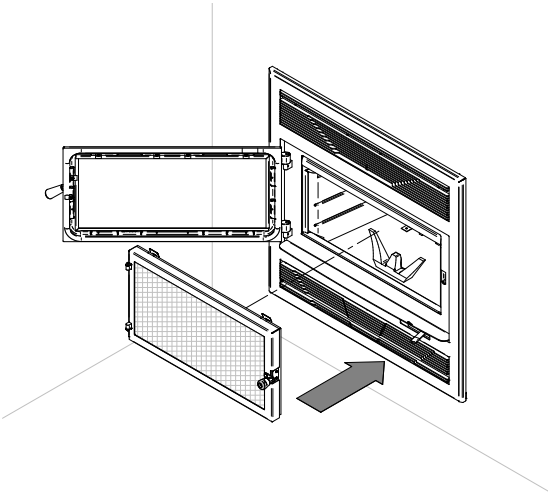

3. Lean the upper part of the firescreen against the top door opening making sure to insert the top firescreen bracket behind the primary air deflector.
4. Lift the firescreen upwards and push the bottom part towards the fireplace then let the firescreen rest on the bottom of the door opening.

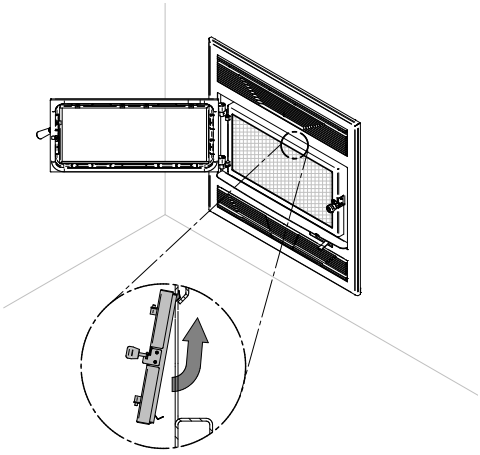

APPENDIX 7: REFRACTORY PANELS REPLACEMENT

1. Using a ratchet and a Torx (T-30) bit , unscrew the two screws **(V)** holding the andiron **(U)**.

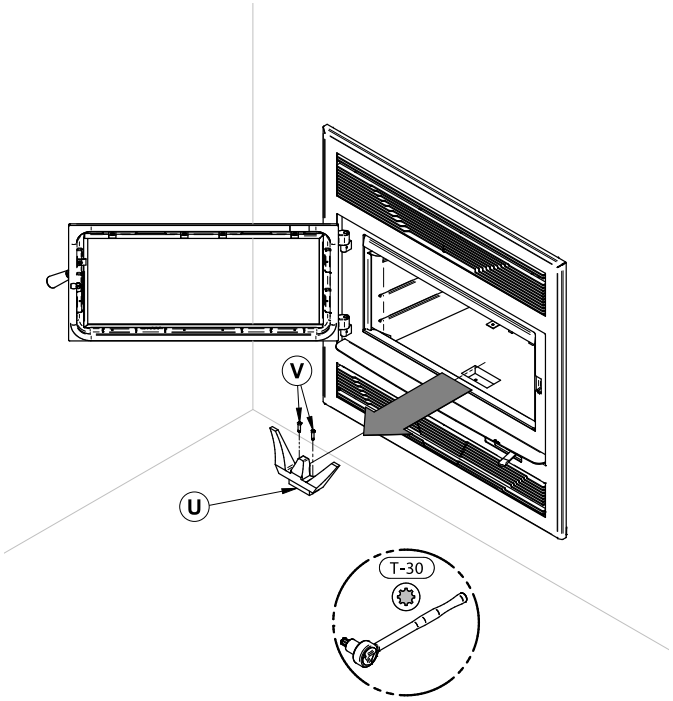

2. Remove the floor refractory panel **(W)**.

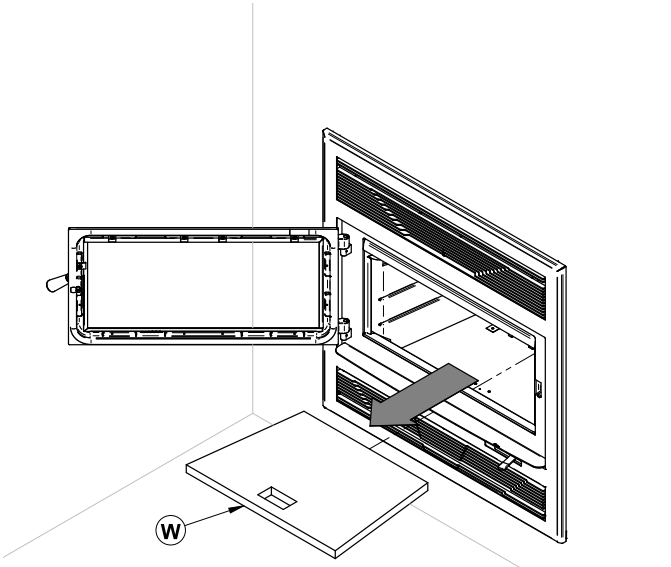

3. Using a power driver, remove the refractory panels brackets **(X)** and the side refractory panels **(Y)**.

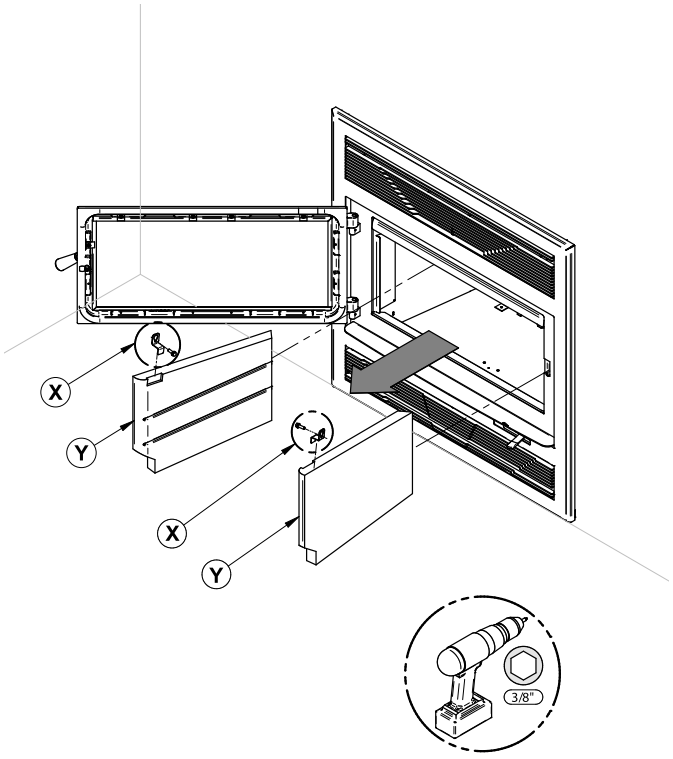

4. Remove the back refractory panel **(Z)**.

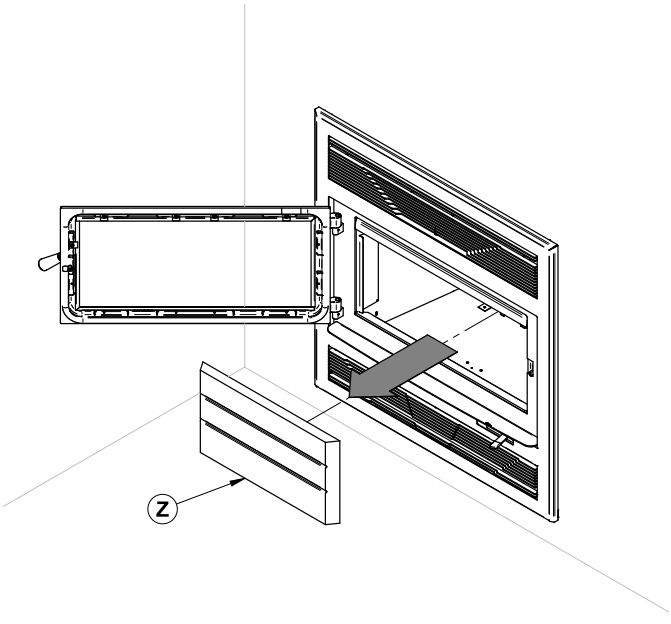

ENGLISH

ANNEXE 8: SECONDARY AIR TUBES AND BAFFLE INSTALLATION

1. Starting with the rear tube, lean and insert the right end of the secondary air tube into the rear right channel hole. Then lift and insert the left end of the tube into the rear left channel.

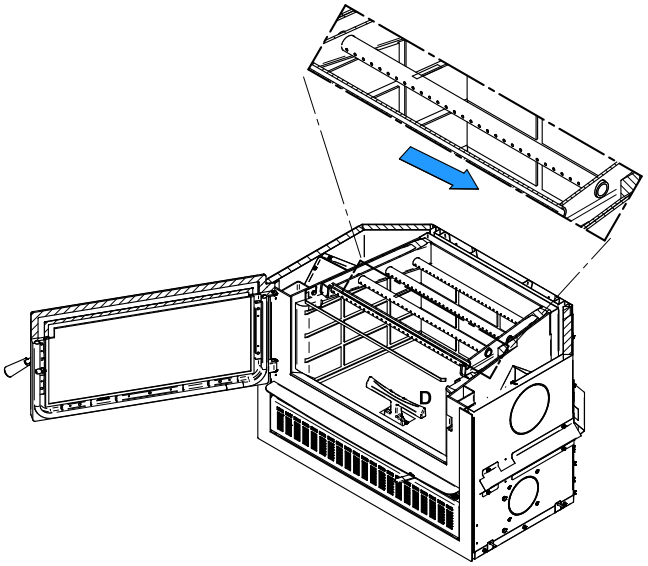

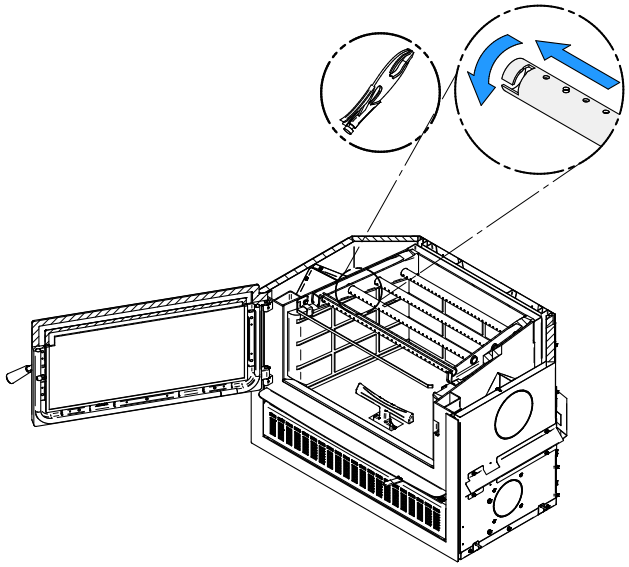

2. Align the notch in the left end of the tube with the key of the left air channel hole. Using a «Wise grip» hold the tube and lock it in place by turning the tube as shown. Make sure the notch reaches the end of the key way.
3. Repeat for center back tube.
4. Put the baffle in place.
5. Repeat steps 1 and 2 for the two front tubes.
6. To remove the tubes use the above steps in reverse order.

Note that secondary air tubes **(A)** *can be replaced without removing the baffle board* **(B)***.*

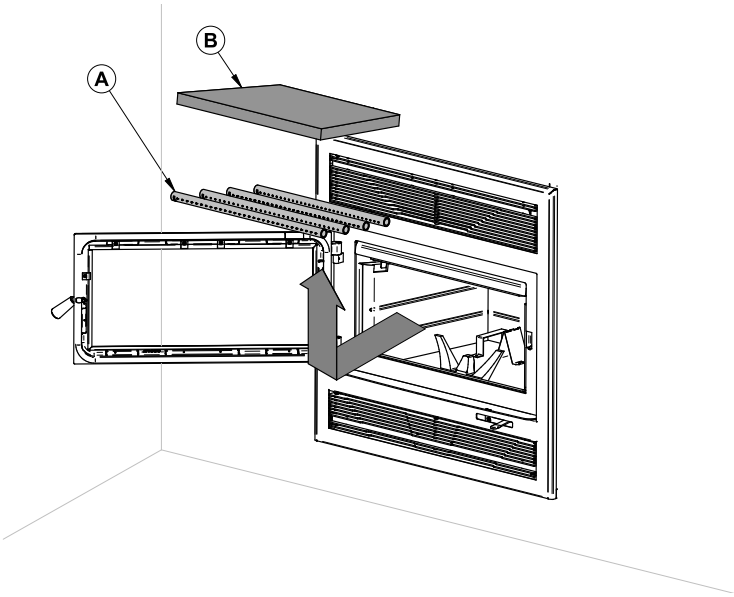

APPENDIX 9: BLOWER REPLACEMENT

To facilitate the blower replacement, it is recommended to remove the faceplate first. Refer to the faceplate installation manual for more details.

1. Remove the air control decorative panel **(J)** by removing the screws **(K)**.

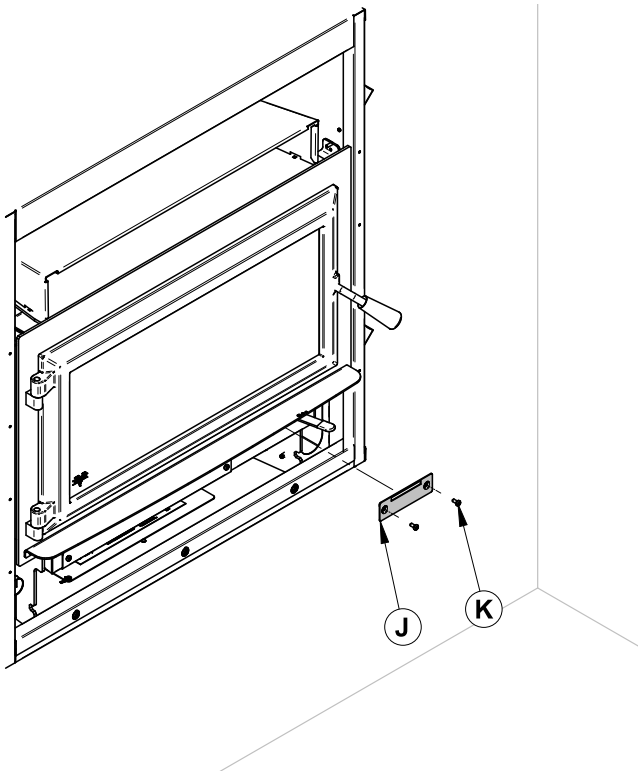

2. Remove the air control housing **(L)** by pulling on it.

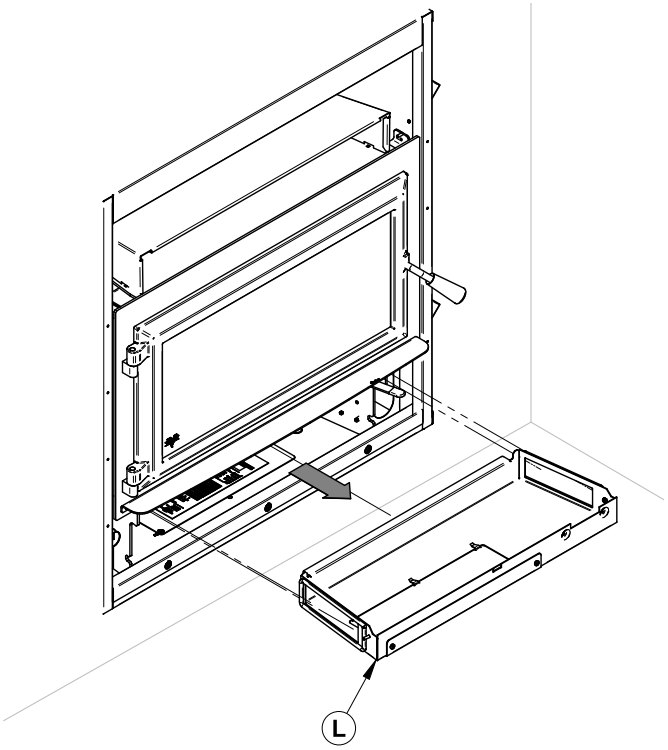

3. Remove the certification plate **(M)**.

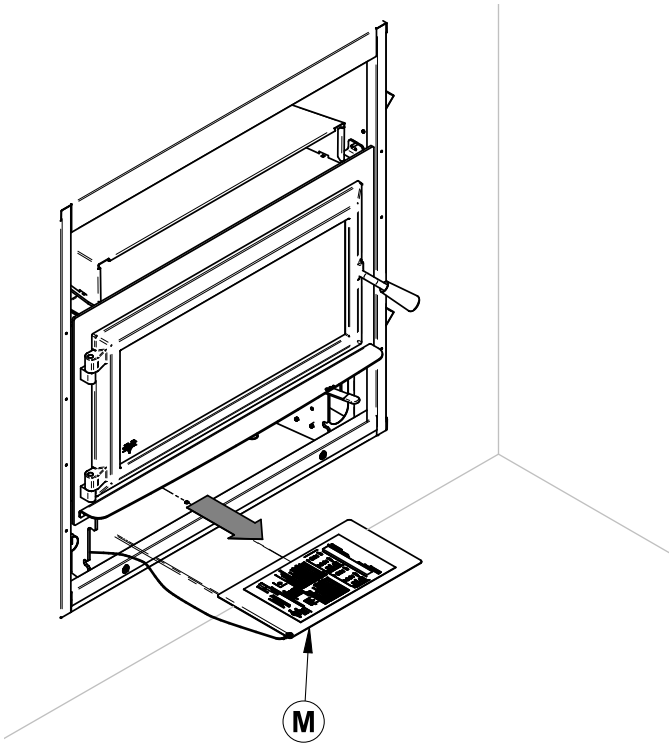

4. Cut the tie wrap **(N)**.

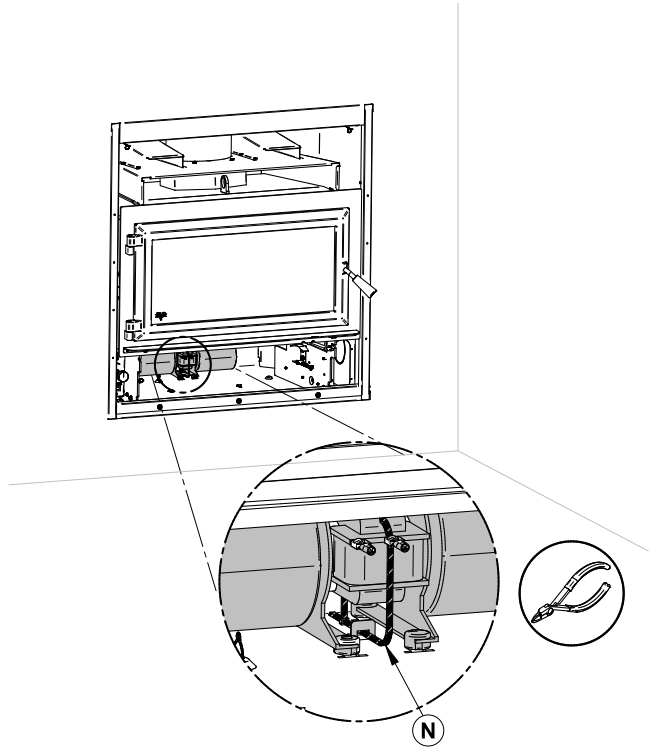

ENGLISH

5. Unplug the blower's electric wires **(P)** and **(Q)**. Lift the blower **(O)** located under the firebox towards the back. Turn 90° to pull out.

6. Repeat the steps in reverse order to reinstall the blower.

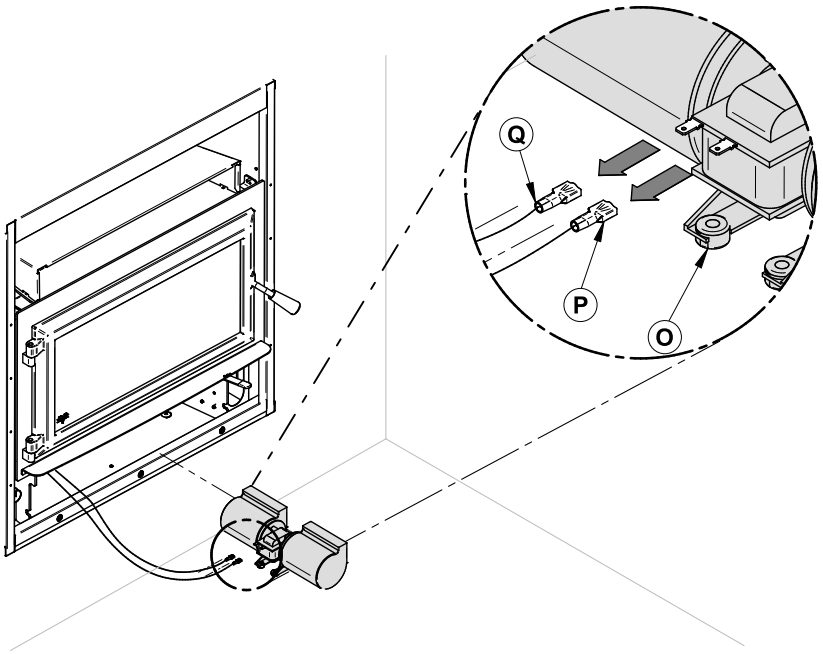

Blower connection

The wiring should be done by a qualified electrician. Connect the wires from the power outlet to the terminal block, making sure that the white wire matches the white wire on the terminal. Connect the black wire with the black wire of the terminal block. The ground (green or skinned wire) must be attached to the fireplace metal frame.

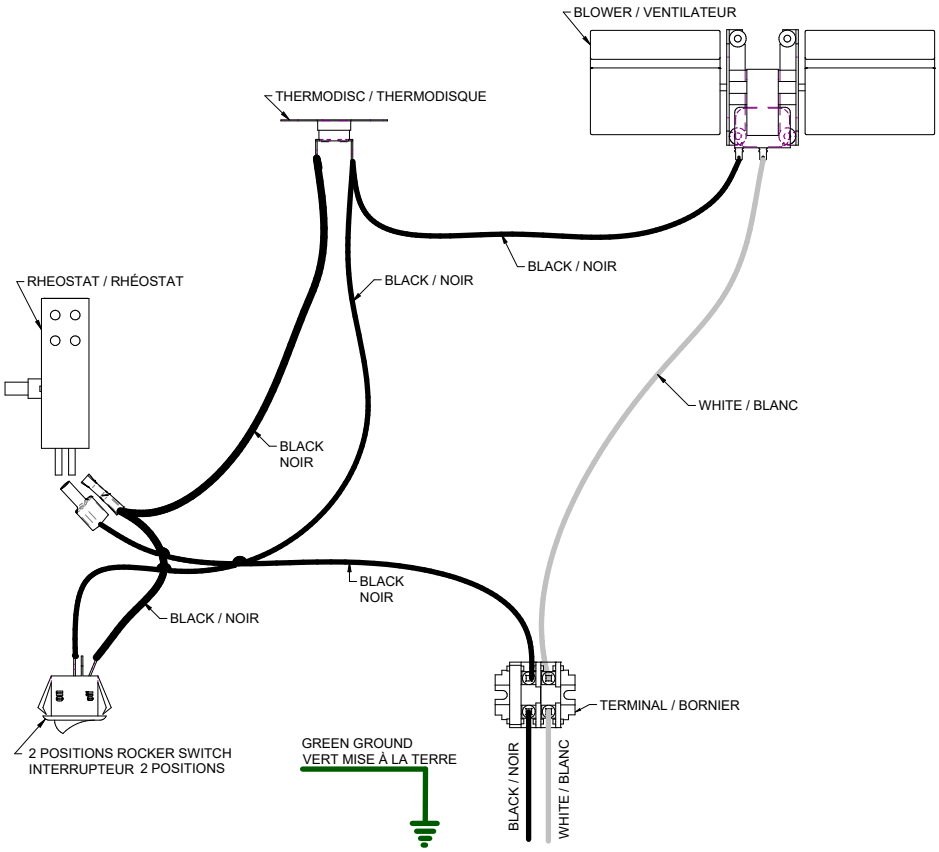

APPENDIX 10: EXPLODED DIAGRAM AND PARTS LIST

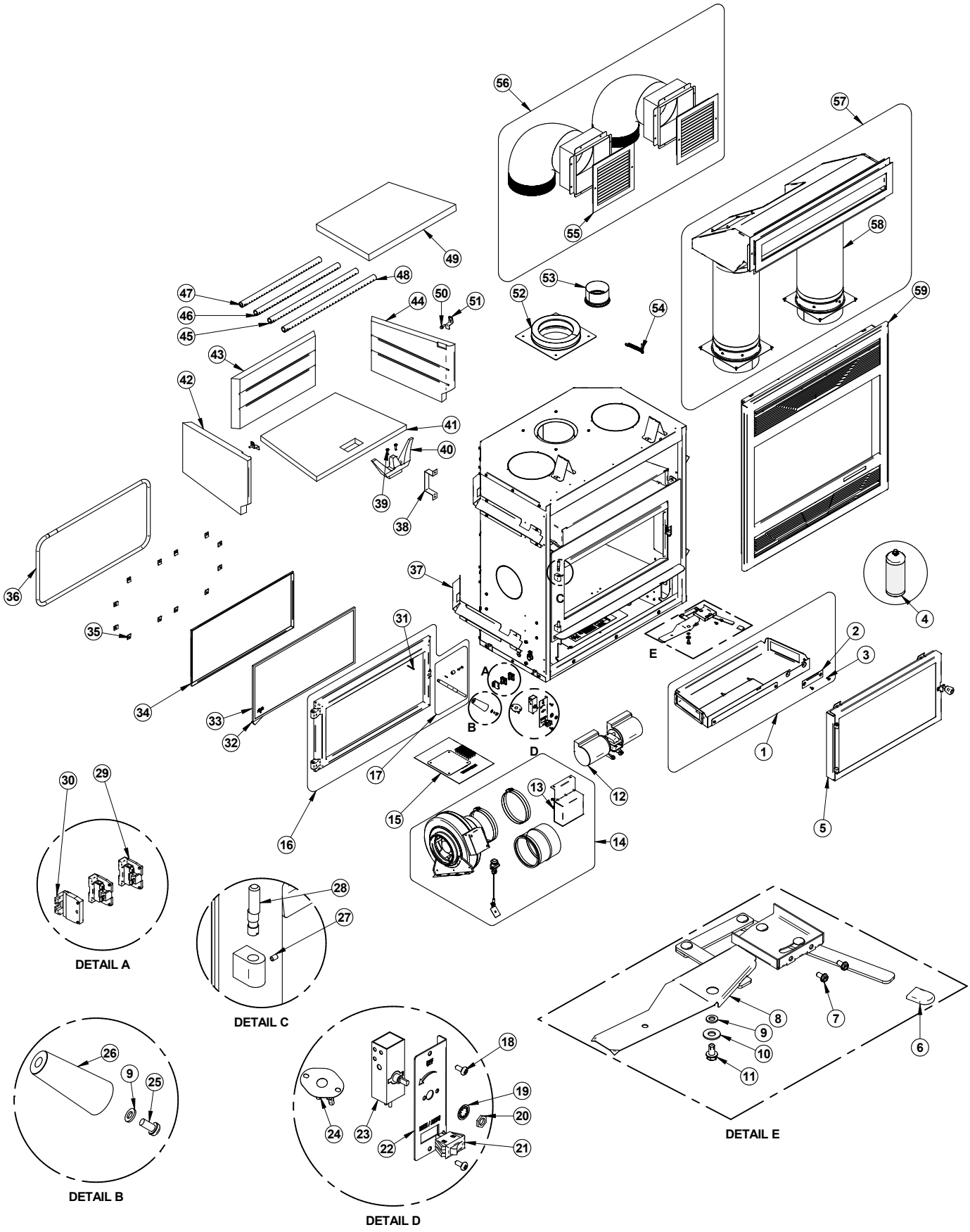

IMPORTANT: THIS IS DATED INFORMATION. When requesting service or replacement parts for your unit, please provide the model number and the serial number. We reserve the right to change parts due to technology upgrades or availability. Contact an authorized dealer to obtain any of these parts. Never use substitute materials. Use of non-approved parts can result in poor performance and safety hazards.

#	Item	Description	Qty
1	SE72023	AIR CONTROL HOUSING ASSEMBLY	1
2	PL72053	AIR INTAKE CLOSING PLATE	1
3	30154	BLACK SCREW #10 X 5/8" QUADREX #2 TYPE A	2
4	AC05959	METALLIC BLACK STOVE PAINT - 342 g (12oz) AEROSOL	1
5	AC01275	FIRE SCREEN DOOR	1
6	30556	AIR CONTROL FINISHING TIP	1
7	30029	THREAD CUTTING SCREW 10-24 TYPE "F" X 3/8" HEX WASHER	2
8	PL72274	PRIMARY AIR CONTROLE SLIDER PLATE	1
9	30187	STAINLESS WASHER ID 17/64" X OD 1/2"	2
10	30206	ZINC WASHER 5/16"ID X 3/4"OD	1
11	30060	THREAD-CUTTING SCREW 1/4-20 X 1/2" F HEX STEEL SLOT WASHER C102 ZINC	1
12	44122	DOUBLE CAGE BLOWER 176 CFM (CLASS H)	1
13	44125	FORCED AIR DISTRIBUTION KIT PC CARD	1
14	AC01374	FORCED AIR DISTRIBUTION KIT 300 CFM	1
15	SE46162	HE250R INSTRUCTION MANUAL KIT	1
16	SE24336	VENTIS CAST IRON DOOR	1
17	SE72135	REPLACEMENT HANDLE WITH LATCH KIT	1
18	30131	BLACK METAL SCREW #10 X 1/2" TYPE "A" PAN QUADREX	1
19	44203	RHEOSTAT WASHER	1
20	44202	RHEOSTAT NUT	1
21	44091	ROCKER SWITCH 2 POSITION MSR-8	1
22	PL72164	BLOWER CONTROL PANEL	1
23	44084	RHEOSTAT WITHOUT NUT AND FLAT WASHER	1
24	44028	CERAMIC THERMODISC F110-20F	1
25	30025	1/4-20 X 1/2" PAN-HEAD QUADREX BLACK SCREW	1
26	30898	ROUND WOODEN BLACK HANDLE DULL BLACK FINISH	1
27	30117	SOCKET SET SCREW #10-32 X 1/4"	2
28	30586	HINGE PIN	2
29	60204A	TERMINAL 3/8" SECTION	2
30	60204B	TERMINAL BLOCK (END SECTION)	1
31	30101	SPRING TENSION PIN 5/32"Ø X 1 1/2"L	1
32	AC06400	3/4" (FLAT) X 6' BLACK SELF-ADHESIVE GLASS GASKET	1
33	SE72341	VENTIS GLASS	1
34	PL72314	GLASS FRAME	2
35	SE53585	GLASS RETAINER KIT WITH SCREWS (12 PER KIT)	1
36	AC06500	SILICONE AND 5/8" X 8' BLACK DOOR GASKET KIT	1
37	PL72161	CONVECTION JACKET SPACER	4

#	Item	Description	Qty
38	PL53065	REAR STANDOFF	2
39	30506	SCREW PAN TORX TYPE F 1/4-20 X 1" BLACK	2
40	PL53144	ANDIRON	1
41	22141	FLOOR REFRACTORY SLAB	1
42	22152	LEFT REFRACTORY	1
43	22150	REAR REFRACTORY	1
44	22151	REFRACTORY RIGHT STONE	1
45	PL72048	CENTER FRONT SECONDARY AIR TUBE	1
46	PL72047	CENTER BACK SECONDARY AIR TUBE	1
47	PL72046	BACK SECONDARY AIR TUBE	1
48	PL72049	FRONT SECONDARY AIR TUBE	1
49	21578	C-CAST BAFFLE	1
50	30094	HEX SCREW WASHER HEAD 1/4-20 X 3/4" F ZINC TYPE	2
51	PL72040	REFRACTORY PANEL BRACKET	2
52	CVA-AP06	6" STAINLESS STEEL ANCHOR PLATE	1
53	PL63954	4" ADAPTOR	1
54	30472	SPRING 1/2'' OUTSIDE Ø X 3''L	2
55	30540	HOT AIR GRAVITY DISTRIBUTION KIT GRILL	2
56	AC01375	HOT AIR GRAVITY DISTRIBUTION KIT - TRADITIONAL	1
57	AC01389	HOT AIR GRAVITY DISTRIBUTION KIT - MODERN WITH ADJUSTABLE PIPES	1
58	SE66646	GRAVITY PIPE EXTENTION KIT UNPAINTED	1
59	VBA1560	MODERN STYLE FACEPLATE - METALLIC BLACK	1

VENTIS LIMITED LIFETIME WARRANTY

The warranty of the manufacturer extends only to the original retail purchaser and is not transferable. This warranty covers brand new products only, which have not been altered, modified nor repaired since shipment from factory. Proof of purchase (dated bill of sale), model name and serial number must be supplied when making any warranty claim to your VENTIS dealer.

This warranty applies to normal residential use only. This warranty applies to normal residential use only. This warranty is void if the unit is used to burn material other than cordwood (for which the unit is not certified by EPA) and void if not operated according to the owner's manual. Damages caused by misuse, abuse, improper installation, lack of maintenance, over firing, negligence or accident during transportation, power failures, downdrafts, venting problems or under-estimated heating area are not covered by this warranty. The recommended heated area for a given appliance is defined by the manufacturer as its capacity to maintain a minimum acceptable temperature in the designated area in case of a power failure.

This warranty does not cover any scratch, corrosion, distortion, or discoloration. Any defect or damage caused by the use of unauthorized or other than original parts voids this warranty. An authorized qualified technician must perform the installation in accordance with the instructions supplied with this product and all local and national building codes. Any service call related to an improper installation is not covered by this warranty.

The manufacturer may require that defective products be returned or that digital pictures be provided to support the claim. Returned products are to be shipped prepaid to the manufacturer for investigation. Transportation fees to ship the product back to the purchaser will be paid by the manufacturer. Repair work covered by the warranty, executed at the purchaser's domicile by an authorized qualified technician requires the prior approval of the manufacturer. All parts and labour costs covered by this warranty are limited according to the table below.

The manufacturer, at its discretion, may decide to repair or replace any part or unit after inspection and investigation of the defect. The manufacturer may, at its discretion, fully discharge all obligations with respect to this warranty by refunding the wholesale price of any warranted but defective parts. The manufacturer shall, in no event, be responsible for any uncommon, indirect, consequential damages of any nature, which are in excess of the original purchase price of the product. **A one-time replacement limit applies to all parts benefiting from lifetime coverage.** This warranty applies to products purchased after March 1st, 2015.

DESCRIPTION	**WARRANTY APPLICATION**	
	PARTS	**LABOUR**
Combustion chamber (welds only), castings and convector air-mate	Lifetime**	4 years
Plating* (defective manufacture) - subject to limitations above Ceramic glass (thermal breakage only*)	Lifetime**	N/A
Stainless steel firebox components, vermiculite, C-Cast or equivalent baffle* and secondary air tubes*, glass retainers and handle assembly	5 years**	3 years
Surrounds and heat shields, ash drawer, steel legs, pedestal and trim (aluminum extrusions)	5 years	N/A
Carbon steel firebox components	3 years	2 years
Blowers, heat sensors, switches, rheostat, wiring and electronics	2 years	1 year
Paint (peeling*), gaskets, insulations, refractory bricks (fireplace only**) and ceramic fibre blankets	1 year	N/A
All parts replaced under the warranty	90 days	N/A

Pictures required** ****Limited to one replacement

Labour cost and repair work to the account of the manufacturer are based on a predetermined rate schedule and must not exceed the wholesale price of the replacement part.

Shall your unit or a components be defective, contact immediately your **VENTIS** dealer. To accelerate processing of your warranty claim, make sure to have on hand the following information when calling:

- Your name, address and telephone number
- Bill of sale and dealer's name
- Installation configuration
- Serial number and model name as indicated on the nameplate fixed to the back of your unit
- Nature of the defect and any relevant information

Before shipping your unit or defective component to our plant, you must obtain an Authorization Number from your VENTIS dealer. Any merchandise shipped to our plant without authorization will be refused automatically and returned to sender.

Wood_Revision : May 2021

This document is available for free download on the manufacturer's website. It is a copyrighted document. Resale is strictly prohibited. The manufacturer may update this document from time to time and cannot be responsible for problems, injuries, or damages arising out of the use of information contained in any document obtained from unauthorized sources.

Stove Builder International inc.
250, rue de Copenhague,
St-Augustin-de-Desmaures (Québec) Canada
G3A 2H3
418-908-8002
www.occanada.com
tech@occanada.com

Thermal Metering System Calibration
Y factor for Method 5G sampling

Manufacturer:	American Meter Company
Model:	DTM-200A
Serial Number:	SBI-046 (90R054300)

Previous Calibration Comparision

Date	2020-10-01	Acceptable	
		Deviation (5%)	Deviation
y Factor	1.011	0.05055	0.001
Acceptance	Acceptable		

Average Gas Meter y Factor	**1.012**

Current Calibration

Acceptable y Deviation	0.050
Maximum y Deviation	0.004
Acceptance	Acceptable

Calibration Date:	2021-06-01
Calibrated by:	Claude Paré
Calibration Frequency:	6-month
Next Calibration Due:	2021-11-30
Instrument Range:	1.000 cfm
Standard Temp.:	71.6 oF
Standard Press.:	29.92 "Hg
Barometric Press.:	30.2 "Hg
Signature/Date:	2021-06-01

Reference Standard *			
Standard Calibrator	Model	Standard Test Meter	
	S/N	07J264834	
	Calib. Date	13-oct-20	
	Calib. Value	0.990	y factor (ref)

Calibration Parameters	Run 1	Run 2	Run 3
Vacuum ("Hg)	0.00	0.00	0.00
dH ("H2O)	0.00	0.00	0.00
Initial Reference Meter	801	807.1	813
Final Reference Meter	806.337	812.4	819.451
Initial DGM	91.711	97.666	103.446
Final DGM	96.93	102.876	109.787
Temp. Ref. Meter (°F), Tr	69.9	70.3	68.9
Temperature DGM (°F), Td	71.9	71.6	70.1
Time (Minutes)	28.0	34.0	52.0
Net Volume Ref. Meter, Vr	5.337	5.300	6.451
Net Volume DGM, Vd	5.219	5.21	6.341
Gas Meter y Factor =	**1.016**	**1.010**	**1.009**
Gas Meter y Factor Deviation (from avg.)	0.004	0.002	0.002
Orifice dH@	**0.00**	**0.00**	**0.00**
Orifice dH@ Deviation (from avg.)	0.000	0.000	0.000

where: 0.186392857

1. Deviation = |Average value for all runs - current run value|
2. y = [Vr x (y factor (ref)) x (Pb) x (Td + 460) / [Vd x (Pb + (dH / 13.6)) x (Tr + 460]
3. dH@ = 0.0317 x dH / (Pb (Td + 460)) x [(Tr + 460) x time) / Vr]^2

* Reference calibration is traceable to NIST through NIST Test # 40674, Kimble ASTM E1272

Thermal Metering System Calibration
Y factor for Method 5G sampling

Manufacturer:	American Meter Company
Model:	DTM-200A
Serial Number:	SBI-047 (98Z332226)

Previous Calibration Comparision

Date	2021-05-27	Acceptable	
		Deviation (5%)	Deviation
y Factor	1.007	0.05035	0.003
Acceptance	Acceptable		

Average Gas Meter y Factor
1.010

Calibration Date:	2021-10-07
Calibrated by:	Claude Paré
Calibration Frequency:	6-month
Next Calibration Due:	2022-04-07
Instrument Range:	1.000 cfm
Standard Temp.:	71 oF
Standard Press.:	29.92 "Hg
Barometric Press.:	30.45 "Hg
Signature/Date:	2021-10-07

Current Calibration

Acceptable y Deviation	0.050
Maximum y Deviation	0.005
Acceptance	Acceptable

Reference Standard *			
Standard	Model	Standard Test Meter	
Calibrator	S/N	07J264834	
	Calib. Date	13-oct-20	
	Calib. Value	0.990	y factor (ref)

Calibration Parameters	Run 1	Run 2	Run 3
Vacuum ("Hg)	0.00	0.00	0.00
dH ("H2O)	0.00	0.00	0.00
Initial Reference Meter	904.8	911.7	918.1
Final Reference Meter	910.911	917.527	923.387
Initial DGM	702.947	709.745	716.022
Final DGM	708.955	715.446	721.175
Temp. Ref. Meter (°F), Tr	71.7	72.7	73.1
Temperature DGM (°F), Td	70.8	71.8	72.7
Time (Minutes)	52.0	37.0	27.0
Net Volume Ref. Meter, Vr	6.111	5.827	5.287
Net Volume DGM, Vd	6.008	5.701	5.153
Gas Meter y Factor =	**1.005**	**1.010**	**1.015**
Gas Meter y Factor Deviation (from avg.)	0.005	0.000	0.005
Orifice dH@	**0.00**	**0.00**	**0.00**
Orifice dH@ Deviation (from avg.)	0.000	0.000	0.000

where: 0.115538462

1. Deviation = |Average value for all runs - current run value|
2. y = [Vr x (y factor (ref)) x (Pb) x (Td + 460) / [Vd x (Pb + (dH / 13.6)) x (Tr + 460]
3. dH@ = 0.0317 x dH / (Pb (Td + 460)) x [(Tr + 460) x time) / Vr]^2

* Reference calibration is traceable to NIST through NIST Test # 40674, Kimble ASTM E1272

Thermal Metering System Calibration
Y factor for Method 5G sampling

Manufacturer:	American Meter Company
Model:	DTM-200A
Serial Number:	SBI-290 (88N515612)

Previous Calibration Comparision

Date	2021-05-26	Acceptable	
		Deviation (5%)	Deviation
y Factor	0.993	0.04965	0.010
Acceptance	Acceptable		

Average Gas Meter y Factor	**0.983**

Current Calibration

Acceptable y Deviation	0.050
Maximum y Deviation	0.002
Acceptance	Acceptable

Calibration Date:	2021-10-06
Calibrated by:	Claude Paré
Calibration Frequency:	6-month
Next Calibration Due:	2022-04-06
Instrument Range:	1.000 cfm
Standard Temp.:	72.3 oF
Standard Press.:	29.92 "Hg
Barometric Press.:	30.5 "Hg
Signature/Date:	2021-10-06

Reference Standard *			
Standard Calibrator	Model	Standard Test Meter	
	S/N	07J264834	
	Calib. Date	13-oct-20	
	Calib. Value	0.990	y factor (ref)

Calibration Parameters	Run 1	Run 2	Run 3
Vacuum ("Hg)	0.00	0.00	0.00
dH ("H2O)	0.00	0.00	0.00
Initial Reference Meter	884.3	889.9	896.4
Final Reference Meter	889.376	895.848	903.595
Initial DGM	203.298	208.948	215.529
Final DGM	208.389	214.93	222.77
Temp. Ref. Meter (°F), Tr	73.0	73.2	73.5
Temperature DGM (°F), Td	72.0	72.2	72.5
Time (Minutes)	31.0	26.0	23.0
Net Volume Ref. Meter, Vr	5.076	5.948	7.195
Net Volume DGM, Vd	5.091	5.982	7.241
Gas Meter y Factor =	**0.985**	**0.983**	**0.982**
Gas Meter y Factor Deviation (from avg.)	0.002	0.001	0.001
Orifice dH@	**0.00**	**0.00**	**0.00**
Orifice dH@ Deviation (from avg.)	0.000	0.000	0.000

where: 0.164225806

1. Deviation = |Average value for all runs - current run value|
2. y = [Vr x (y factor (ref)) x (Pb) x (Td + 460) / [Vd x (Pb + (dH / 13.6)) x (Tr + 460]
3. dH@ = 0.0317 x dH / (Pb (Td + 460)) x [(Tr + 460) x time) / Vr]^2

* Reference calibration is traceable to NIST through NIST Test # 40674, Kimble ASTM E1272

Thermal Metering System Calibration
Y factor for Method 5G sampling

Manufacturer:	American Meter Company
Model:	DTM-200A
Serial Number:	SBI-046 (90R054300)

Previous Calibration Comparision

Date	2021-10-12	Acceptable	
		Deviation (5%)	Deviation
y Factor	1.007	0.05035	0.000
Acceptance	Acceptable		

Average Gas Meter y Factor	**1.007**

Current Calibration

Acceptable y Deviation	0.050
Maximum y Deviation	0.002
Acceptance	Acceptable

Calibration Date:	2021-11-18		
Calibrated by:	Claude Paré		
Calibration Frequency:	Post test calibration		
Next Calibration Due:			
Instrument Range:	1.000	cfm	
Standard Temp.:	66.8	oF	
Standard Press.:	29.92	"Hg	
Barometric Press.:	29.95	"Hg	
Signature/Date:		2021-11-18	

Reference Standard *			
Standard Calibrator	Model	Standard Test Meter	
	S/N	07J264834	
	Calib. Date	2021-11-16	
	Calib. Value	0.991	y factor (ref)

Calibration Parameters	Run 1	Run 2	Run 3
Vacuum ("Hg)	0.00	0.00	0.00
dH ("H2O)	0.00	0.00	0.00
Initial Reference Meter	1.1	6.4	11.7
Final Reference Meter	6.184	11.448	17.05
Initial DGM	285.564	290.788	296.007
Final DGM	290.574	295.752	301.284
Temp. Ref. Meter (°F), Tr	65.8	65.8	65.8
Temperature DGM (°F), Td	66.5	66.5	66.6
Time (Minutes)	32.0	32.0	34.0
Net Volume Ref. Meter, Vr	5.084	5.048	5.350
Net Volume DGM, Vd	5.01	4.964	5.277
Gas Meter y Factor =	**1.007**	**1.009**	**1.006**
Gas Meter y Factor Deviation (from avg.)	0.000	0.002	0.001
Orifice dH@	**0.00**	**0.00**	**0.00**
Orifice dH@ Deviation (from avg.)	0.000	0.000	0.000

where: 0.1565625

1. Deviation = |Average value for all runs - current run value|
2. y = [Vr x (y factor (ref)) x (Pb) x (Td + 460) / [Vd x (Pb + (dH / 13.6)) x (Tr + 460]
3. dH@ = 0.0317 x dH / (Pb (Td + 460)) x [(Tr + 460) x time) / Vr]^2

* Reference calibration is traceable to NIST through NIST Test # 40674, Kimble ASTM E1272

Thermal Metering System Calibration
Y factor for Method 5G sampling

Manufacturer:	American Meter Company
Model:	DTM-200A
Serial Number:	SBI-047 (98Z332226)

Previous Calibration Comparision

Date	2021-10-07	Acceptable	
		Deviation (5%)	Deviation
y Factor	1.01	0.0505	0.002
Acceptance	Acceptable		

Average Gas Meter y Factor	**1.008**

Calibration Date:	2021-11-18
Calibrated by:	Claude Paré
Calibration Frequency:	Post test calibration
Next Calibration Due:	
Instrument Range:	1.000 cfm
Standard Temp.:	66.7 oF
Standard Press.:	29.92 "Hg
Barometric Press.:	30 "Hg
Signature/Date:	2021-11-18

Current Calibration

Acceptable y Deviation	0.050
Maximum y Deviation	0.001
Acceptance	Acceptable

Reference Standard *			
Standard Calibrator	Model	Standard Test Meter	
	S/N	07J264834	
	Calib. Date	2021-11-16	
	Calib. Value	0.991	y factor (ref)

Calibration Parameters	Run 1	Run 2	Run 3
Vacuum ("Hg)	0.00	0.00	0.00
dH ("H2O)	0.00	0.00	0.00
Initial Reference Meter	983	989.5	994.8
Final Reference Meter	989.272	994.5	999.946
Initial DGM	421.401	427.805	433.018
Final DGM	427.579	432.733	438.09
Temp. Ref. Meter (°F), Tr	65.5	65.6	65.6
Temperature DGM (°F), Td	67.0	66.7	66.6
Time (Minutes)	40.0	32.0	33.0
Net Volume Ref. Meter, Vr	6.272	5.000	5.146
Net Volume DGM, Vd	6.178	4.928	5.072
Gas Meter y Factor =	**1.009**	**1.008**	**1.007**
Gas Meter y Factor Deviation (from avg.)	0.001	0.000	0.001
Orifice dH@	**0.00**	**0.00**	**0.00**
Orifice dH@ Deviation (from avg.)	0.000	0.000	0.000

where: 0.15445

1. Deviation = |Average value for all runs - current run value|
2. y = [Vr x (y factor (ref)) x (Pb) x (Td + 460) / [Vd x (Pb + (dH / 13.6)) x (Tr + 460]
3. dH@ = 0.0317 x dH / (Pb (Td + 460)) x [(Tr + 460) x time) / Vr]^2

* Reference calibration is traceable to NIST through NIST Test # 40674, Kimble ASTM E1272

Thermal Metering System Calibration
Y factor for Method 5G sampling

Manufacturer:	American Meter Company
Model:	DTM-200A
Serial Number:	SBI-290 (88N515612)

Previous Calibration Comparision

Date	2021-10-06	Acceptable	
		Deviation (5%)	Deviation
y Factor	0.983	0.04915	0.012
Acceptance	Acceptable		

Average Gas Meter y Factor	**0.995**

Current Calibration

Acceptable y Deviation	0.050
Maximum y Deviation	0.002
Acceptance	Acceptable

Calibration Date:	2021-11-18
Calibrated by:	Claude Paré
Calibration Frequency:	Post test calibration
Next Calibration Due:	
Instrument Range:	1.000 cfm
Standard Temp.:	66.6 oF
Standard Press.:	29.92 "Hg
Barometric Press.:	30.05 "Hg
Signature/Date:	2021-11-18

Reference Standard *			
Standard Calibrator	Model	Standard Test Meter	
	S/N	07J264834	
	Calib. Date	2021-11-16	
	Calib. Value	0.991	y factor (ref)

Calibration Parameters	Run 1	Run 2	Run 3
Vacuum ("Hg)	0.00	0.00	0.00
dH ("H2O)	0.00	0.00	0.00
Initial Reference Meter	964.8	971.4	976.7
Final Reference Meter	970.985	976.479	981.791
Initial DGM	270.383	276.964	282.237
Final DGM	276.548	282.018	287.319
Temp. Ref. Meter (°F), Tr	65.6	65.4	65.2
Temperature DGM (°F), Td	65.7	65.8	65.8
Time (Minutes)	47.0	39.0	39.0
Net Volume Ref. Meter, Vr	6.185	5.079	5.091
Net Volume DGM, Vd	6.165	5.054	5.082
Gas Meter y Factor =	**0.994**	**0.997**	**0.994**
Gas Meter y Factor Deviation (from avg.)	0.001	0.002	0.001
Orifice dH@	**0.00**	**0.00**	**0.00**
Orifice dH@ Deviation (from avg.)	0.000	0.000	0.000

where: 0.131170213

1. Deviation = |Average value for all runs - current run value|
2. y = [Vr x (y factor (ref)) x (Pb) x (Td + 460) / [Vd x (Pb + (dH / 13.6)) x (Tr + 460]
3. dH@ = 0.0317 x dH / (Pb (Td + 460)) x [(Tr + 460) x time) / Vr]^2

* Reference calibration is traceable to NIST through NIST Test # 40674, Kimble ASTM E1272

POLYCONTROLS
INTEGRATION • CALIBRATION • INSTRUMENTATION

CLAS 2009-02

Conseil canadien des normes
Laboratoire accrédité
Portée d'accréditation 655

CERTIFICAT D'ÉTALONNAGE # 13027

Date d'étalonnage : 2020-10-13
Date d'émission du certificat : 2020-10-13

Stove Builder International
250, rue de Copenhague
Saint-Augustin-de-Desmaures, Québec, Canada
G3A 2H3

Étalonnage d'un
Débitmètre volumétrique American Meter Company DTM-200A S/N : 07J264834

CONFORMITÉ AU PROGRAMME DE QUALITÉ

Tous les étalonnages sont effectués conformément au manuel d'assurance qualité de Polycontrols qui est conforme à la norme ISO/IEC 17025 – 2017, à la norme ISO 9001 – 2015 ainsi qu'à tout autre exigences de qualité définies dans la description d'achat des clients.

TRAÇABILITÉ

La traçabilité des étalons de débit au National Institute of Standards and Technology, NIST, est maintenue par les laboratoires de Fluke Corporation de Phoenix, Arizona et est conforme aux normes ISO/IEC 17025, ANSI/NCSL Z540-1-1994, ISO-10012-1, MIL-STD 45662A.

Le Service d'évaluation des laboratoires d'étalonnage (CLAS) du Conseil national de recherches du Canada (CNRC) a évalué et certifié la capacité d'étalonnage du laboratoire et la traçabilité au Système international d'unités (SI) ou à des étalons acceptables selon le CLAS. Le présent certificat d'étalonnage est délivré conformément aux conditions de certification du CLAS et aux conditions d'accréditation du Conseil canadien des normes (CCN). Le CLAS et le CCN ne garantissent pas l'exactitude des étalonnages individuels effectués par les laboratoires accrédités.

APTITUDE EN MATIÈRE DE MESURE ET D'ÉTALONNAGE - CMC

Les références utilisées pour l'étalonnage de débit ont une incertitude de ±0.2% de la lecture pour les mesures entre 5 SCCM à 10 SLPM, ±0.3% de la lecture pour les mesures entre 10 SLPM à 30 SLPM, ±0.2% de la lecture pour les mesures entre 30 SLPM à 3000 SLPM, ±0.3% de la lecture pour les mesures supérieures à 3000 SLPM jusqu'à 6000 SLPM et ±0.5% pour les mesures inférieures à 5 SCCM jusqu'à concurrence de 1 SCCM, équivalent air ou azote. Les incertitudes exprimées sont élargies avec un facteur d'élargissement k = 2, et ce, pour un niveau de confiance d'environ 95 %, dans l'hypothèse d'une distribution normale incluant la résolution de l'instrument. Le rapport d'incertitude des essais (RIE) de cet étalonnage respecte un ratio de 4:1 à moins d'indication contraire.

SOMMAIRE DES CONDITIONS DE L'INSTRUMENT EN TEST

Conditions initiales	En bon état
Travail Effectué	Étalonnage de l'instrument
	Lectures Initiales = Lectures finales, aucun ajustement
Résultats	Lectures finales dans les tolérances
Remarques	Fréquence d'étalonnage aux 12 mois

Bernard Poirier
Métrologiste

Responsable du laboratoire

©2012 Polycontrols • Le présent document ne peut être reproduit, sinon en entier, que par l'approbation écrite des laboratoires d'étalonnage de la compagnie Polycontrols inc. 3650 boul. Matte (Local A-1), Brossard (Québec), Canada, J4Y 2Z2
Tel: (450) 444-3600 Fax: (450) 444-1088 www.polycontrols.com

POLYCONTROLS
INTEGRATION • CALIBRATION • INSTRUMENTATION

CLAS NRC·CNRC
CLAS 2009-02

Conseil canadien des normes
Laboratoire accrédité
Portée d'accréditation 655

Certificat d'étalonnage # 13027

Numéro de série:	07J264834	Station de mesure:	3
Date d'étalonnage:	2020-10-13	Procédure:	POS-CAL-005
Identification de l'instrument:	SBI-103	Règle de décision:	Méthode #2

Instrument de mesure de référence utilisé pour l'étalonnage final

Description	Modèle	# Série	Traçabilité	Date dû
DHI molbloc (30 slpm)	3E4-VCR-V-Q	2359	1500279712	2021-03-04
DHI molbox1	Molbox1	755	1500285062	2021-06-09
RTD Mist	Mist	L00295	2019008203	2020-12-13
Module 44.5 PSI avec Baro 163671	Module 30	160659	2020003156	2021-04-28

Spécifications finales de l'appareil

Gaz	Air
Température d'opération	
Pression à l'entrée	
Pression à la sortie	
Température de référence	
Pression de référence	
Étendue d'échelle	0-200 ACFH
Signaux Entrée/Sortie	-
Alimentation	
Tolérance	±2 %F.S.

Condition d'étalonnage

Gaz	Air
Température ambiante	22 °C
Pression ambiante	1017.71 mbar
Orientation	Horizontale
Élastomère	Viton
Valve	Viton

Lectures finales

Débit du test ACFH	Instrument en test ft³	Valeurs mesurées Pression PSIA	Température °C	Référence ft³	Référence calculée ft³	Erreur calculée ft³	Tolérance acceptable ft³	Incertitude k = 2 ft³	TUR
5.0012	0.8350	14.7006	22.19	0.8297	0.8325	0.0025	0.6658	0.0034	>4
10.0479	1.6910	14.6978	22.14	1.6681	1.6737	0.0173	0.6663	0.0056	>4
15.0460	2.5350	14.6960	22.09	2.4977	2.5060	0.0290	0.6662	0.0083	>4
25.0808	4.2250	14.6987	22.01	4.1601	4.1720	0.0530	0.6654	0.0139	>4
40.1053	6.7640	14.7066	21.93	6.6675	6.6813	0.0827	0.6664	0.0222	>4

POLYCONTROLS
INTEGRATION • CALIBRATION • INSTRUMENTATION

CLAS 2009-02

Conseil canadien des normes
Laboratoire accrédité
Portée d'accréditation 655

Certificat d'étalonnage # 13027

Numéro de série:	07J264834	Station de mesure:	3
Date d'étalonnage:	2020-10-13	Procédure:	POS-CAL-005
Identification de l'instrument:	SBI-103	Règle de décision:	Méthode #2

Résultats finaux

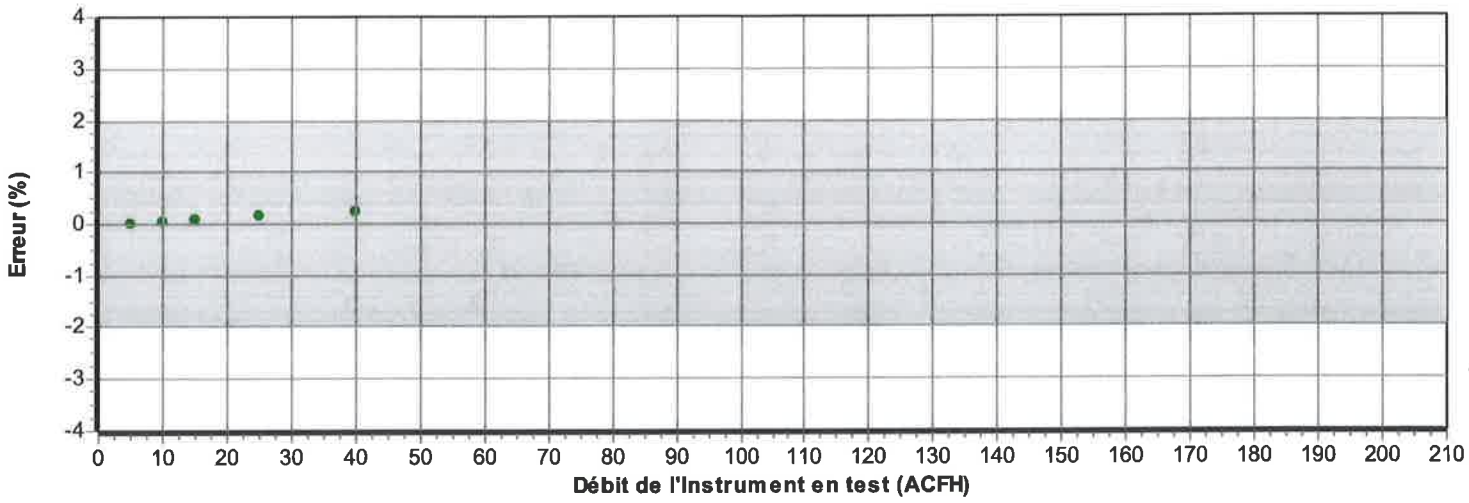

Voir l'annexe pour la règle de décision

POLYCONTROLS
INTEGRATION • CALIBRATION • INSTRUMENTATION

CLAS 2009-02

#655

CERTIFICAT D'ÉTALONNAGE # 15508

Date d'étalonnage : 2021-11-16
Date d'émission du certificat : 2021-11-16

Stove Builder International
250, rue de Copenhague
Saint-Augustin-de-Desmaures, Québec, Canada
G3A 2H3

Étalonnage d'un
Débitmètre volumétrique American Meter Company DTM-200A S/N : 07J264834

CONFORMITÉ AU PROGRAMME DE QUALITÉ

Tous les étalonnages sont effectués conformément au manuel d'assurance qualité de Polycontrols qui est conforme à la norme ISO/IEC 17025: 2017, à la norme ISO 9001 – 2015 ainsi qu'à toutes autres exigences de qualité définies dans la description d'achat des clients. Les résultats ne sont valides que pour l'objet soumis à l'essai ou à l'étalonnage. Si applicable, la règle de décision est décrite au certificat.

TRAÇABILITÉ

La traçabilité des étalons de débit au National Institute of Standards and Technology, NIST, est maintenue par les laboratoires de Fluke Corporation de Phoenix, Arizona et est conforme aux normes ISO/IEC 17025, ANSI/NCSL Z540-1-1994, ISO-10012-1, MIL-STD 45662A.

Le Service d'évaluation des laboratoires d'étalonnage (CLAS) du Conseil national de recherches du Canada (CNRC) a évalué et certifié la capacité d'étalonnage du laboratoire et la traçabilité au Système international d'unités (SI) ou à des étalons acceptables selon le CLAS. Le présent certificat d'étalonnage est délivré conformément aux conditions de certification du CLAS et aux conditions d'accréditation du Conseil canadien des normes (CCN). Le CLAS et le CCN ne garantissent pas l'exactitude des étalonnages individuels effectués par les laboratoires accrédités.

APTITUDE EN MATIÈRE DE MESURE ET D'ÉTALONNAGE - CMC

Les rendements métrologiques d'étalonnage ont une incertitude de ±0.2% de la lecture pour les mesures entre 5 SCCM à 10 SLPM, ±0.3% de la lecture pour les mesures entre 10 SLPM à 30 SLPM, ±0.2% de la lecture pour les mesures entre 30 SLPM à 3000 SLPM, ±0.3% de la lecture pour les mesures supérieures à 3000 SLPM jusqu'à 6000 SLPM et ±0.5% pour les mesures inférieures à 5 SCCM jusqu'à concurrence de 1 SCCM, équivalent air ou azote. Les incertitudes exprimées sont élargies avec un facteur d'élargissement k = 2, et ce, pour un niveau de confiance d'environ 95 %, dans l'hypothèse d'une distribution normale incluant la résolution de l'instrument. Le rapport d'incertitude des essais (RIE) de cet étalonnage respecte un ratio de 4:1 à moins d'indication contraire.

SOMMAIRE DES CONDITIONS DE L'INSTRUMENT EN TEST

Conditions initiales	En bon état
Travail Effectué	Étalonnage de l'instrument
	Lectures Initiales = Lectures finales, aucun ajustement
Résultats	Lectures finales dans les tolérances
Remarques	Fréquence d'étalonnage aux 12 mois

B Poirier
Bernard Poirier
Métrologiste

Olivier Duchesne Bamber
Responsable du laboratoire

©2020 Polycontrols • Le présent document ne peut être reproduit, sinon en entier, que par l`approbation écrite des laboratoires d'étalonnage de la compagnie Polycontrols inc. 3650 boul. Matte (Local A-1), Brossard (Québec), Canada, J4Y 2Z2
Tel: (450) 444-3600 Fax: (450) 444-1088 www.polycontrols.com

POLYCONTROLS
INTEGRATION • CALIBRATION • INSTRUMENTATION

CLAS NRC·CNRC
CLAS 2009-02

SCC Accredited LAB
LAB Accrédité CCN
#655

Certificat d'étalonnage # 15508

Numéro de série:	07J264834	Station de mesure:	3
Date d'étalonnage:	2021-11-16	Procédure:	POS-CAL-005
Identification de l'instrument:	SBI-103	Règle de décision:	Méthode #3

Instrument de mesure de référence utilisé pour l'étalonnage final

Description	Modèle	# Série	Traçabilité	Date dû
Fluke molbloc_30 slpm	3E4-VCR-V-Q	2403	1500308202	2022-06-03
Fluke molbox1	Molbox1	755	1500311473	2022-07-02
RTD Mist	M22	3061002	2021004861	2022-06-21
Module 44.5 PSI avec Baro 163671	Module 30	160659	2021003409	2022-05-04

Spécifications finales de l'appareil

Gaz	Air
Température d'opération	
Pression à l'entrée	
Pression à la sortie	
Température de référence	
Pression de référence	
Étendue d'échelle	0-200 ACFH
Signaux Entrée/Sortie	-
Alimentation	
Tolérance	±2 %F.S.

Condition d'étalonnage

Gaz	Air
Température ambiante	21 °C
Pression ambiante	1011.43 mbar
Orientation	Horizontale
Élastomère	
Valve	

Lectures finales

Débit du test ACFH	Instrument en test ft³	Valeurs mesurées Pression PSIA	Température °C	Référence ft³	Référence calculée ft³	Erreur calculée ft³	Tolérance acceptable ft³	Incertitude k = 2 ft³	TUR
5.0186	0.8420	14.682	21.02	0.8338	0.8343	0.0077	0.6650	0.0034	>4
10.0496	1.6810	14.681	20.98	1.6724	1.6733	0.0077	0.6660	0.0056	>4
15.0522	2.5230	14.680	20.95	2.5036	2.5049	0.0181	0.6657	0.0083	>4
24.9227	4.1870	14.682	20.92	4.1549	4.1561	0.0309	0.6670	0.0138	>4
39.7734	6.6830	14.687	20.92	6.6241	6.6237	0.0593	0.6661	0.0220	>4

POLYCONTROLS
INTEGRATION • CALIBRATION • INSTRUMENTATION

CLAS 2009-02

#655

Certificat d'étalonnage # 15508

Numéro de série:	07J264834	Station de mesure:	3
Date d'étalonnage:	2021-11-16	Procédure:	POS-CAL-005
Identification de l'instrument:	SBI-103	Règle de décision:	Méthode #3

Résultats finaux

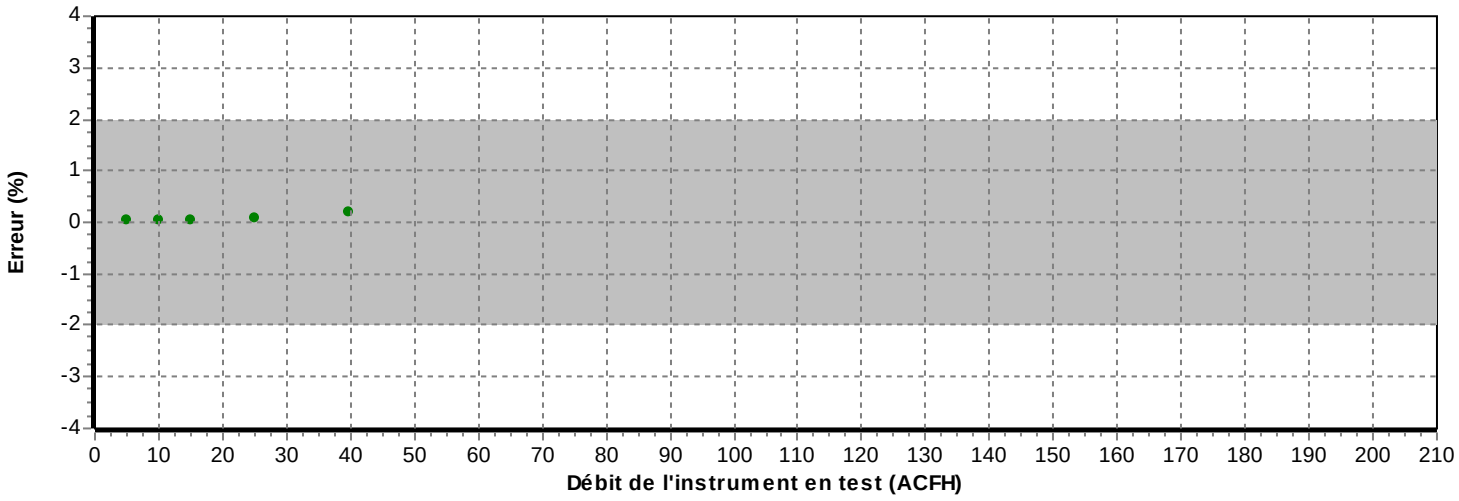

Voir l'annexe pour la règle de décision

Annexe pour la règle de décision

Méthode 3 Statut de Conformité Non-binaire avec Bande de Garde en considérant l'incertitude de la mesure directement

Cette méthode tient compte d'une bande de garde pour définir l'intervalle acceptable et de rejet. La limite acceptable du résultat de la mesure est calculée selon la méthode mathématique suivante AL = TL – w et de rejet RL = TL + w, dont w = rU. Le multiple r de l'incertitude combiné élargie U peut être défini selon la table 1 section 5.2 du document ILAC G8 : 2019. L'incertitude de la mesure U est une incertitude combinée élargie ayant un niveau de confiance de 95% (k = 2). La règle de conformité non-binaire avec bande de garde est définie lorsqu'il y a quatre choix sur le statut de l'essai : dans la tolérance, acceptation conditionnelle, rejet conditionnel, et hors tolérance.

Les conformités de l'essai sont définies telles que :

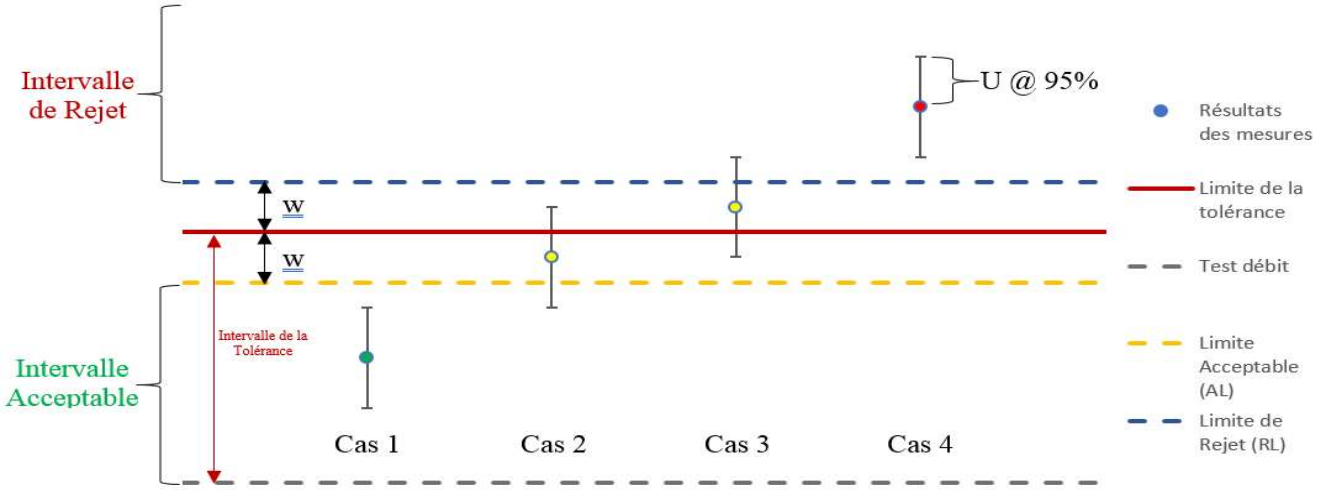

Explication de la règle Non-Binaire avec Bande de Garde

Cas 1 – *Inférieur à la limite acceptable AL*, ***Statut*** *:* ***Dans les tolérances (In tolerance)****.*

- Le résultat de la mesure est à l'intérieur de l'intervalle acceptable. Cependant, l'estimation du risque en assumant la probabilité d'une distribution normale d'être à l'extérieur de la limite de la tolérance est < 2.5%. L'incertitude de l'essai est directement prise en considération. Couleur verte.

Cas 2 – *Inférieur à la limite de la tolérance TL, supérieur à la limite acceptable AL*, ***Statut*** *:* ***Dans les tolérances-Conditionnel****.*

- Le résultat de la mesure est à l'extérieur de l'intervalle acceptable mais inférieur à la limite de la tolérance. Cependant, la valeur observée est située dans la bande de garde w = TL-AL et le statut du résultat est conditionnel à l'évaluation du risque du client. L'incertitude de la mesure est directement prise en considération. Couleur jaune.

Cas 3 – *Supérieur à la limite de la tolérance, inférieur à RL*, ***Statut*** *:* ***Hors tolérance-Conditionnel****.*

- Le résultat de la mesure est supérieur à la limite de la tolérance mais à l'extérieur de l'intervalle de rejet. Cependant, la valeur observée est située dans la bande de garde w = TL-RL et le statut du résultat est conditionnel à l'évaluation du risque du client. L'incertitude de la mesure est directement prise en considération. Couleur jaune.

Cas 4 – *Supérieur à la limite de rejet RL*, ***Statut*** *:* ***Hors-tolérance (Out of tolerance)****.*

- Le résultat de la mesure est à l'intérieur de l'intervalle de rejet. L'incertitude de l'essai est directement prise en considération. Couleur rouge.

©2020 Polycontrols — Le présent document ne peut être reproduit, sinon en entier, que par l`approbation écrite des laboratoires d`étalonnages de la compagnie Polycontrols inc. 3650 boul. Matte (Local A-1), Brossard (Québec), Canada, J4Y 2Z2
Tel : (450) 444-3600 Fax : (450) 444-1088 www.polycontrols.com

Unit break-in period

Total conditionning time (h)	57.08

Model tested: 2.5R Series

Identification number: QC20210924-2.5RSERIES

Date	Burn cycle	Test run (#)	Duration (min)	Av. Flue (°F)	Load type (-)	Fuel added (lbs)	Moisture (DB%)
2021-09-28	Preload	NA	66	362	Kindling & SUF	9.95	14.8
	Condition		142	535	High fire	19.95	20.3
	Load		450	327	Medium fire	23.17	19.6
2021-10-15	Preload	NA	58	311	Kindling & SUF	8.16	15
	Condition		92	556	High fire	17.63	19.1
	Load		359	368	Medium fire	20.47	20.2
2021-10-19	Preload	NA	51	413	Kindling & SUF	8.69	14.5
	Condition		96	576	High fire	18.29	20.1
	Load		421	322	Medium fire	23.35	19.7
2021-10-20	Preload	NA	47	437	Kindling & SUF	8.77	14.6
	Condition		120	566	High fire	18.76	19.5
	Load		379	382	Medium fire	23.28	19.6
2021-10-22	Preload	NA	55	389	Kindling & SUF	8.56	14.7
	Condition		84	621	High fire	18.78	19.7
	Load		416	334	Medium fire	22.90	19.5
2021-10-29	Preload	NA	45	465	Kindling & SUF	9.40	14.6
	Condition		94	596	High fire	19.35	19.4
	Load		450	334	Medium fire	23.95	19.7

2.5R Series Pre-burn Data 2021-09-28 Total time (h) 10.97

Load time	Load type	Fuel added	Moisture		Time	Flue Temp
(-)	(-)	(lbs)	(DB %)		(min)	(°F)
2021-09-28 10:13	Kindling & SUF	9.95	14.8	**Pre-Charge (min)**	66	362.1
2021-09-28 11:20	High fire	19.95	20.3	**Conditioning (min)**	142	534.6
2021-09-28 13:42	Medium fire	23.17	19.6	**Load (min)**	450	327.5

	Average Tflue (°F)	**362.1**		**534.6**		**327.5**
	Pre-Charge (min)	**66**	**Conditioning (min)**	**142**	**Load (min)**	**450**
Index	**Date & Time**	**Flue (F)**	**Date & Time**	**Flue (F)**	**Date & Time**	**Flue (F)**
0	2021-09-28 10:13	88.3	2021-09-28 11:20	451.7	2021-09-28 13:42	373.5
1	2021-09-28 10:14	119.0	2021-09-28 11:21	433.7	2021-09-28 13:43	337.1
2	2021-09-28 10:15	142.8	2021-09-28 11:22	478.8	2021-09-28 13:44	322.1
3	2021-09-28 10:16	199.8	2021-09-28 11:23	515.0	2021-09-28 13:45	333.6
4	2021-09-28 10:17	237.9	2021-09-28 11:24	541.8	2021-09-28 13:46	451.0
5	2021-09-28 10:18	258.2	2021-09-28 11:25	563.3	2021-09-28 13:47	529.3
6	2021-09-28 10:19	299.2	2021-09-28 11:26	585.2	2021-09-28 13:48	478.2
7	2021-09-28 10:20	336.3	2021-09-28 11:27	608.9	2021-09-28 13:49	513.8
8	2021-09-28 10:21	349.1	2021-09-28 11:28	623.2	2021-09-28 13:50	551.9
9	2021-09-28 10:22	345.5	2021-09-28 11:29	630.9	2021-09-28 13:51	581.1
10	2021-09-28 10:23	333.8	2021-09-28 11:30	637.1	2021-09-28 13:52	618.1
11	2021-09-28 10:24	340.2	2021-09-28 11:31	642.8	2021-09-28 13:53	629.7
12	2021-09-28 10:25	341.0	2021-09-28 11:32	647.5	2021-09-28 13:54	620.4
13	2021-09-28 10:26	335.8	2021-09-28 11:33	649.1	2021-09-28 13:55	589.0
14	2021-09-28 10:27	334.3	2021-09-28 11:34	651.6	2021-09-28 13:56	553.2
15	2021-09-28 10:28	332.8	2021-09-28 11:35	649.7	2021-09-28 13:57	524.0
16	2021-09-28 10:29	333.9	2021-09-28 11:36	651.6	2021-09-28 13:58	504.4
17	2021-09-28 10:30	336.3	2021-09-28 11:37	656.1	2021-09-28 13:59	491.9
18	2021-09-28 10:31	342.2	2021-09-28 11:38	648.6	2021-09-28 14:00	484.6
19	2021-09-28 10:32	348.2	2021-09-28 11:39	637.0	2021-09-28 14:01	483.2
20	2021-09-28 10:33	345.7	2021-09-28 11:40	642.4	2021-09-28 14:02	485.7
21	2021-09-28 10:34	349.1	2021-09-28 11:41	651.3	2021-09-28 14:03	487.0
22	2021-09-28 10:35	353.5	2021-09-28 11:42	660.8	2021-09-28 14:04	486.6
23	2021-09-28 10:36	357.3	2021-09-28 11:43	666.7	2021-09-28 14:05	487.0
24	2021-09-28 10:37	361.5	2021-09-28 11:44	668.6	2021-09-28 14:06	486.4
25	2021-09-28 10:38	366.9	2021-09-28 11:45	672.4	2021-09-28 14:07	485.9
26	2021-09-28 10:39	368.8	2021-09-28 11:46	674.0	2021-09-28 14:08	483.8
27	2021-09-28 10:40	367.0	2021-09-28 11:47	673.6	2021-09-28 14:09	482.2
28	2021-09-28 10:41	365.5	2021-09-28 11:48	675.6	2021-09-28 14:10	480.7
29	2021-09-28 10:42	360.5	2021-09-28 11:49	674.9	2021-09-28 14:11	480.0
30	2021-09-28 10:43	353.9	2021-09-28 11:50	673.5	2021-09-28 14:12	478.2
31	2021-09-28 10:44	354.7	2021-09-28 11:51	673.9	2021-09-28 14:13	477.2
32	2021-09-28 10:45	357.8	2021-09-28 11:52	671.1	2021-09-28 14:14	476.7
33	2021-09-28 10:46	376.3	2021-09-28 11:53	668.8	2021-09-28 14:15	477.4
34	2021-09-28 10:47	393.2	2021-09-28 11:54	668.6	2021-09-28 14:16	476.8
35	2021-09-28 10:48	400.2	2021-09-28 11:55	665.7	2021-09-28 14:17	476.3
36	2021-09-28 10:49	400.4	2021-09-28 11:56	662.3	2021-09-28 14:18	475.5
37	2021-09-28 10:50	394.0	2021-09-28 11:57	662.9	2021-09-28 14:19	476.3
38	2021-09-28 10:51	388.8	2021-09-28 11:58	666.4	2021-09-28 14:20	475.0
39	2021-09-28 10:52	388.5	2021-09-28 11:59	664.8	2021-09-28 14:21	475.1
40	2021-09-28 10:53	391.0	2021-09-28 12:00	663.3	2021-09-28 14:22	474.9
41	2021-09-28 10:54	392.5	2021-09-28 12:01	661.7	2021-09-28 14:23	476.1
42	2021-09-28 10:55	390.3	2021-09-28 12:02	660.8	2021-09-28 14:24	475.7
43	2021-09-28 10:56	388.5	2021-09-28 12:03	660.0	2021-09-28 14:25	476.5
44	2021-09-28 10:57	391.1	2021-09-28 12:04	660.5	2021-09-28 14:26	475.8
45	2021-09-28 10:58	393.3	2021-09-28 12:05	656.9	2021-09-28 14:27	475.2
46	2021-09-28 10:59	396.3	2021-09-28 12:06	653.4	2021-09-28 14:28	475.7
47	2021-09-28 11:00	400.6	2021-09-28 12:07	651.4	2021-09-28 14:29	474.7
48	2021-09-28 11:01	406.2	2021-09-28 12:08	647.0	2021-09-28 14:30	474.2
49	2021-09-28 11:02	413.9	2021-09-28 12:09	645.2	2021-09-28 14:31	475.3

50	2021-09-28 11:03	423.2	2021-09-28 12:10	642.3	2021-09-28 14:32	476.6
51	2021-09-28 11:04	430.5	2021-09-28 12:11	641.0	2021-09-28 14:33	477.4
52	2021-09-28 11:05	427.2	2021-09-28 12:12	639.7	2021-09-28 14:34	476.4
53	2021-09-28 11:06	420.8	2021-09-28 12:13	642.3	2021-09-28 14:35	476.4
54	2021-09-28 11:07	416.3	2021-09-28 12:14	639.5	2021-09-28 14:36	476.6
55	2021-09-28 11:08	410.2	2021-09-28 12:15	635.1	2021-09-28 14:37	478.5
56	2021-09-28 11:09	406.3	2021-09-28 12:16	631.9	2021-09-28 14:38	477.5
57	2021-09-28 11:10	401.4	2021-09-28 12:17	627.0	2021-09-28 14:39	477.8
58	2021-09-28 11:11	398.7	2021-09-28 12:18	621.9	2021-09-28 14:40	480.3
59	2021-09-28 11:12	395.9	2021-09-28 12:19	618.9	2021-09-28 14:41	480.2
60	2021-09-28 11:13	390.6	2021-09-28 12:20	614.2	2021-09-28 14:42	480.5
61	2021-09-28 11:14	386.3	2021-09-28 12:21	611.9	2021-09-28 14:43	482.2
62	2021-09-28 11:15	384.9	2021-09-28 12:22	608.3	2021-09-28 14:44	484.4
63	2021-09-28 11:16	477.8	2021-09-28 12:23	603.2	2021-09-28 14:45	488.2
64	2021-09-28 11:17	462.1	2021-09-28 12:24	601.0	2021-09-28 14:46	492.3
65	2021-09-28 11:18	453.9	2021-09-28 12:25	598.8	2021-09-28 14:47	496.1
66	2021-09-28 11:19	452.7	2021-09-28 12:26	598.4	2021-09-28 14:48	495.7
67			2021-09-28 12:27	597.5	2021-09-28 14:49	497.5
68			2021-09-28 12:28	594.1	2021-09-28 14:50	498.4
69			2021-09-28 12:29	587.1	2021-09-28 14:51	501.1
70			2021-09-28 12:30	583.7	2021-09-28 14:52	503.5
71			2021-09-28 12:31	578.8	2021-09-28 14:53	508.1
72			2021-09-28 12:32	571.4	2021-09-28 14:54	513.7
73			2021-09-28 12:33	563.5	2021-09-28 14:55	514.0
74			2021-09-28 12:34	556.3	2021-09-28 14:56	513.0
75			2021-09-28 12:35	548.1	2021-09-28 14:57	512.0
76			2021-09-28 12:36	540.2	2021-09-28 14:58	512.7
77			2021-09-28 12:37	532.5	2021-09-28 14:59	517.0
78			2021-09-28 12:38	526.3	2021-09-28 15:00	520.0
79			2021-09-28 12:39	518.1	2021-09-28 15:01	525.4
80			2021-09-28 12:40	513.2	2021-09-28 15:02	531.4
81			2021-09-28 12:41	508.3	2021-09-28 15:03	537.3
82			2021-09-28 12:42	504.2	2021-09-28 15:04	535.5
83			2021-09-28 12:43	501.1	2021-09-28 15:05	526.2
84			2021-09-28 12:44	497.2	2021-09-28 15:06	517.6
85			2021-09-28 12:45	493.6	2021-09-28 15:07	510.9
86			2021-09-28 12:46	489.5	2021-09-28 15:08	505.5
87			2021-09-28 12:47	483.1	2021-09-28 15:09	500.2
88			2021-09-28 12:48	477.1	2021-09-28 15:10	496.0
89			2021-09-28 12:49	472.0	2021-09-28 15:11	491.4
90			2021-09-28 12:50	467.4	2021-09-28 15:12	485.9
91			2021-09-28 12:51	462.7	2021-09-28 15:13	481.2
92			2021-09-28 12:52	458.6	2021-09-28 15:14	476.9
93			2021-09-28 12:53	455.4	2021-09-28 15:15	474.2
94			2021-09-28 12:54	451.1	2021-09-28 15:16	471.9
95			2021-09-28 12:55	448.3	2021-09-28 15:17	467.6
96			2021-09-28 12:56	444.6	2021-09-28 15:18	465.0
97			2021-09-28 12:57	441.5	2021-09-28 15:19	461.1
98			2021-09-28 12:58	437.3	2021-09-28 15:20	457.2
99			2021-09-28 12:59	435.0	2021-09-28 15:21	453.8
100			2021-09-28 13:00	431.6	2021-09-28 15:22	451.6
101			2021-09-28 13:01	428.7	2021-09-28 15:23	449.8
102			2021-09-28 13:02	426.1	2021-09-28 15:24	447.6
103			2021-09-28 13:03	424.6	2021-09-28 15:25	445.8
104			2021-09-28 13:04	422.8	2021-09-28 15:26	443.9
105			2021-09-28 13:05	420.9	2021-09-28 15:27	443.3
106			2021-09-28 13:06	419.6	2021-09-28 15:28	442.1
107			2021-09-28 13:07	418.4	2021-09-28 15:29	441.0
108			2021-09-28 13:08	417.0	2021-09-28 15:30	440.2
109			2021-09-28 13:09	415.7	2021-09-28 15:31	439.5
110			2021-09-28 13:10	414.4	2021-09-28 15:32	438.7

111			2021-09-28 13:11	413.9	2021-09-28 15:33	437.6
112			2021-09-28 13:12	412.7	2021-09-28 15:34	436.2
113			2021-09-28 13:13	410.8	2021-09-28 15:35	433.7
114			2021-09-28 13:14	410.2	2021-09-28 15:36	432.3
115			2021-09-28 13:15	409.1	2021-09-28 15:37	429.4
116			2021-09-28 13:16	407.3	2021-09-28 15:38	428.4
117			2021-09-28 13:17	406.5	2021-09-28 15:39	425.5
118			2021-09-28 13:18	405.8	2021-09-28 15:40	421.5
119			2021-09-28 13:19	404.4	2021-09-28 15:41	418.1
120			2021-09-28 13:20	403.5	2021-09-28 15:42	415.0
121			2021-09-28 13:21	402.4	2021-09-28 15:43	412.3
122			2021-09-28 13:22	401.6	2021-09-28 15:44	410.0
123			2021-09-28 13:23	400.1	2021-09-28 15:45	408.2
124			2021-09-28 13:24	399.3	2021-09-28 15:46	406.1
125			2021-09-28 13:25	398.1	2021-09-28 15:47	404.1
126			2021-09-28 13:26	397.6	2021-09-28 15:48	401.4
127			2021-09-28 13:27	396.2	2021-09-28 15:49	399.3
128			2021-09-28 13:28	395.0	2021-09-28 15:50	397.2
129			2021-09-28 13:29	394.2	2021-09-28 15:51	395.7
130			2021-09-28 13:30	393.6	2021-09-28 15:52	393.7
131			2021-09-28 13:31	392.5	2021-09-28 15:53	392.1
132			2021-09-28 13:32	393.3	2021-09-28 15:54	390.2
133			2021-09-28 13:33	392.9	2021-09-28 15:55	389.1
134			2021-09-28 13:34	390.5	2021-09-28 15:56	387.8
135			2021-09-28 13:35	388.1	2021-09-28 15:57	386.0
136			2021-09-28 13:36	386.0	2021-09-28 15:58	384.3
137			2021-09-28 13:37	384.6	2021-09-28 15:59	382.9
138			2021-09-28 13:38	383.1	2021-09-28 16:00	382.3
139			2021-09-28 13:39	382.2	2021-09-28 16:01	382.0
140			2021-09-28 13:40	381.6	2021-09-28 16:02	380.5
141			2021-09-28 13:41	380.8	2021-09-28 16:03	377.0
142			2021-09-28 13:42	380.2	2021-09-28 16:04	371.9
143					2021-09-28 16:05	367.4
144					2021-09-28 16:06	363.1
145					2021-09-28 16:07	358.8
146					2021-09-28 16:08	355.1
147					2021-09-28 16:09	351.8
148					2021-09-28 16:10	348.7
149					2021-09-28 16:11	346.0
150					2021-09-28 16:12	344.0
151					2021-09-28 16:13	341.3
152					2021-09-28 16:14	339.3
153					2021-09-28 16:15	337.4
154					2021-09-28 16:16	335.5
155					2021-09-28 16:17	333.8
156					2021-09-28 16:18	331.7
157					2021-09-28 16:19	330.9
158					2021-09-28 16:20	329.5
159					2021-09-28 16:21	328.3
160					2021-09-28 16:22	326.8
161					2021-09-28 16:23	325.4
162					2021-09-28 16:24	324.5
163					2021-09-28 16:25	323.6
164					2021-09-28 16:26	322.2
165					2021-09-28 16:27	321.8
166					2021-09-28 16:28	320.8
167					2021-09-28 16:29	320.1
168					2021-09-28 16:30	319.0
169					2021-09-28 16:31	318.8
170					2021-09-28 16:32	317.7
171					2021-09-28 16:33	316.9

172					2021-09-28 16:34	316.9
173					2021-09-28 16:35	316.8
174					2021-09-28 16:36	316.4
175					2021-09-28 16:37	316.2
176					2021-09-28 16:38	315.4
177					2021-09-28 16:39	315.4
178					2021-09-28 16:40	314.7
179					2021-09-28 16:41	314.6
180					2021-09-28 16:42	314.2
181					2021-09-28 16:43	313.7
182					2021-09-28 16:44	313.2
183					2021-09-28 16:45	312.4
184					2021-09-28 16:46	312.2
185					2021-09-28 16:47	311.9
186					2021-09-28 16:48	311.6
187					2021-09-28 16:49	311.7
188					2021-09-28 16:50	310.1
189					2021-09-28 16:51	309.2
190					2021-09-28 16:52	307.9
191					2021-09-28 16:53	307.5
192					2021-09-28 16:54	306.9
193					2021-09-28 16:55	306.5
194					2021-09-28 16:56	305.7
195					2021-09-28 16:57	305.2
196					2021-09-28 16:58	304.6
197					2021-09-28 16:59	303.4
198					2021-09-28 17:00	303.5
199					2021-09-28 17:01	303.0
200					2021-09-28 17:02	302.0
201					2021-09-28 17:03	301.9
202					2021-09-28 17:04	301.8
203					2021-09-28 17:05	301.3
204					2021-09-28 17:06	300.8
205					2021-09-28 17:07	300.4
206					2021-09-28 17:08	299.4
207					2021-09-28 17:09	298.7
208					2021-09-28 17:10	297.2
209					2021-09-28 17:11	297.0
210					2021-09-28 17:12	296.2
211					2021-09-28 17:13	295.7
212					2021-09-28 17:14	294.9
213					2021-09-28 17:15	294.4
214					2021-09-28 17:16	293.9
215					2021-09-28 17:17	292.7
216					2021-09-28 17:18	292.3
217					2021-09-28 17:19	291.5
218					2021-09-28 17:20	291.3
219					2021-09-28 17:21	290.6
220					2021-09-28 17:22	290.3
221					2021-09-28 17:23	289.8
222					2021-09-28 17:24	288.8
223					2021-09-28 17:25	288.5
224					2021-09-28 17:26	287.8
225					2021-09-28 17:27	286.8
226					2021-09-28 17:28	286.4
227					2021-09-28 17:29	285.6
228					2021-09-28 17:30	285.5
229					2021-09-28 17:31	284.8
230					2021-09-28 17:32	284.5
231					2021-09-28 17:33	284.3
232					2021-09-28 17:34	283.4

233					2021-09-28 17:35	283.6
234					2021-09-28 17:36	282.7
235					2021-09-28 17:37	282.5
236					2021-09-28 17:38	281.9
237					2021-09-28 17:39	281.8
238					2021-09-28 17:40	281.4
239					2021-09-28 17:41	281.3
240					2021-09-28 17:42	281.1
241					2021-09-28 17:43	280.8
242					2021-09-28 17:44	280.3
243					2021-09-28 17:45	280.1
244					2021-09-28 17:46	279.7
245					2021-09-28 17:47	278.8
246					2021-09-28 17:48	278.4
247					2021-09-28 17:49	277.6
248					2021-09-28 17:50	277.2
249					2021-09-28 17:51	276.8
250					2021-09-28 17:52	276.8
251					2021-09-28 17:53	275.8
252					2021-09-28 17:54	275.2
253					2021-09-28 17:55	274.9
254					2021-09-28 17:56	274.5
255					2021-09-28 17:57	273.8
256					2021-09-28 17:58	273.5
257					2021-09-28 17:59	272.9
258					2021-09-28 18:00	272.9
259					2021-09-28 18:01	272.2
260					2021-09-28 18:02	271.4
261					2021-09-28 18:03	270.8
262					2021-09-28 18:04	270.7
263					2021-09-28 18:05	270.3
264					2021-09-28 18:06	269.9
265					2021-09-28 18:07	269.2
266					2021-09-28 18:08	268.7
267					2021-09-28 18:09	267.8
268					2021-09-28 18:10	267.3
269					2021-09-28 18:11	267.2
270					2021-09-28 18:12	266.6
271					2021-09-28 18:13	265.8
272					2021-09-28 18:14	265.0
273					2021-09-28 18:15	264.8
274					2021-09-28 18:16	264.4
275					2021-09-28 18:17	264.3
276					2021-09-28 18:18	263.8
277					2021-09-28 18:19	263.7
278					2021-09-28 18:20	263.0
279					2021-09-28 18:21	262.0
280					2021-09-28 18:22	261.8
281					2021-09-28 18:23	261.7
282					2021-09-28 18:24	261.1
283					2021-09-28 18:25	260.7
284					2021-09-28 18:26	260.2
285					2021-09-28 18:27	260.1
286					2021-09-28 18:28	259.8
287					2021-09-28 18:29	259.7
288					2021-09-28 18:30	259.3
289					2021-09-28 18:31	258.4
290					2021-09-28 18:32	258.4
291					2021-09-28 18:33	257.9
292					2021-09-28 18:34	257.5
293					2021-09-28 18:35	257.2

294					2021-09-28 18:36	257.4
295					2021-09-28 18:37	257.0
296					2021-09-28 18:38	256.9
297					2021-09-28 18:39	256.7
298					2021-09-28 18:40	256.3
299					2021-09-28 18:41	255.5
300					2021-09-28 18:42	255.4
301					2021-09-28 18:43	254.8
302					2021-09-28 18:44	254.9
303					2021-09-28 18:45	254.8
304					2021-09-28 18:46	254.4
305					2021-09-28 18:47	253.8
306					2021-09-28 18:48	253.8
307					2021-09-28 18:49	253.4
308					2021-09-28 18:50	253.3
309					2021-09-28 18:51	252.9
310					2021-09-28 18:52	252.6
311					2021-09-28 18:53	252.2
312					2021-09-28 18:54	252.4
313					2021-09-28 18:55	251.9
314					2021-09-28 18:56	251.0
315					2021-09-28 18:57	250.5
316					2021-09-28 18:58	250.4
317					2021-09-28 18:59	250.3
318					2021-09-28 19:00	250.3
319					2021-09-28 19:01	250.0
320					2021-09-28 19:02	249.5
321					2021-09-28 19:03	249.1
322					2021-09-28 19:04	248.5
323					2021-09-28 19:05	248.0
324					2021-09-28 19:06	247.6
325					2021-09-28 19:07	247.1
326					2021-09-28 19:08	246.7
327					2021-09-28 19:09	246.2
328					2021-09-28 19:10	246.2
329					2021-09-28 19:11	246.2
330					2021-09-28 19:12	245.2
331					2021-09-28 19:13	245.3
332					2021-09-28 19:14	245.2
333					2021-09-28 19:15	244.8
334					2021-09-28 19:16	244.4
335					2021-09-28 19:17	244.5
336					2021-09-28 19:18	244.3
337					2021-09-28 19:19	243.7
338					2021-09-28 19:20	243.5
339					2021-09-28 19:21	242.8
340					2021-09-28 19:22	242.5
341					2021-09-28 19:23	242.2
342					2021-09-28 19:24	241.8
343					2021-09-28 19:25	241.6
344					2021-09-28 19:26	241.2
345					2021-09-28 19:27	241.1
346					2021-09-28 19:28	240.8
347					2021-09-28 19:29	240.1
348					2021-09-28 19:30	239.8
349					2021-09-28 19:31	239.6
350					2021-09-28 19:32	239.3
351					2021-09-28 19:33	239.0
352					2021-09-28 19:34	238.2
353					2021-09-28 19:35	238.2
354					2021-09-28 19:36	237.9

355					2021-09-28 19:37	237.7
356					2021-09-28 19:38	237.2
357					2021-09-28 19:39	236.7
358					2021-09-28 19:40	236.8
359					2021-09-28 19:41	236.2
360					2021-09-28 19:42	235.9
361					2021-09-28 19:43	235.9
362					2021-09-28 19:44	235.1
363					2021-09-28 19:45	234.8
364					2021-09-28 19:46	234.6
365					2021-09-28 19:47	234.4
366					2021-09-28 19:48	234.4
367					2021-09-28 19:49	234.0
368					2021-09-28 19:50	233.6
369					2021-09-28 19:51	233.0
370					2021-09-28 19:52	233.0
371					2021-09-28 19:53	232.3
372					2021-09-28 19:54	232.2
373					2021-09-28 19:55	232.2
374					2021-09-28 19:56	231.9
375					2021-09-28 19:57	231.1
376					2021-09-28 19:58	230.8
377					2021-09-28 19:59	230.7
378					2021-09-28 20:00	230.5
379					2021-09-28 20:01	230.0
380					2021-09-28 20:02	229.5
381					2021-09-28 20:03	229.5
382					2021-09-28 20:04	229.3
383					2021-09-28 20:05	228.9
384					2021-09-28 20:06	228.6
385					2021-09-28 20:07	228.6
386					2021-09-28 20:08	228.2
387					2021-09-28 20:09	227.4
388					2021-09-28 20:10	227.2
389					2021-09-28 20:11	227.3
390					2021-09-28 20:12	227.0
391					2021-09-28 20:13	226.6
392					2021-09-28 20:14	226.4
393					2021-09-28 20:15	225.6
394					2021-09-28 20:16	225.5
395					2021-09-28 20:17	225.4
396					2021-09-28 20:18	224.9
397					2021-09-28 20:19	224.4
398					2021-09-28 20:20	224.1
399					2021-09-28 20:21	223.8
400					2021-09-28 20:22	223.7
401					2021-09-28 20:23	223.5
402					2021-09-28 20:24	222.8
403					2021-09-28 20:25	222.9
404					2021-09-28 20:26	222.0
405					2021-09-28 20:27	221.7
406					2021-09-28 20:28	221.6
407					2021-09-28 20:29	221.1
408					2021-09-28 20:30	220.8
409					2021-09-28 20:31	220.1
410					2021-09-28 20:32	219.9
411					2021-09-28 20:33	219.3
412					2021-09-28 20:34	218.6
413					2021-09-28 20:35	218.2
414					2021-09-28 20:36	217.9
415					2021-09-28 20:37	216.9

416					2021-09-28 20:38	216.9
417					2021-09-28 20:39	216.2
418					2021-09-28 20:40	216.3
419					2021-09-28 20:41	215.6
420					2021-09-28 20:42	214.9
421					2021-09-28 20:43	214.3
422					2021-09-28 20:44	214.1
423					2021-09-28 20:45	213.4
424					2021-09-28 20:46	213.2
425					2021-09-28 20:47	212.6
426					2021-09-28 20:48	212.3
427					2021-09-28 20:49	212.0
428					2021-09-28 20:50	211.0
429					2021-09-28 20:51	210.4
430					2021-09-28 20:52	210.4
431					2021-09-28 20:53	210.1
432					2021-09-28 20:54	209.7
433					2021-09-28 20:55	209.0
434					2021-09-28 20:56	208.7
435					2021-09-28 20:57	208.3
436					2021-09-28 20:58	207.5
437					2021-09-28 20:59	207.3
438					2021-09-28 21:00	206.8
439					2021-09-28 21:01	206.5
440					2021-09-28 21:02	205.9
441					2021-09-28 21:03	205.5
442					2021-09-28 21:04	204.8
443					2021-09-28 21:05	204.4
444					2021-09-28 21:06	203.8
445					2021-09-28 21:07	203.6
446					2021-09-28 21:08	203.2
447					2021-09-28 21:09	202.9
448					2021-09-28 21:10	202.1
449					2021-09-28 21:11	201.7
450					2021-09-28 21:12	201.1
451						
452						
453						
454						
455						
456						
457						
458						
459						
460						
461						
462						
463						
464						
465						
466						
467						
468						
469						
470						
471						
472						
473						
474						
475						
476						

477						
478						
479						
480						
481						
482						
483						
484						
485						
486						
487						
488						
489						
490						
491						
492						
493						
494						
495						
496						
497						
498						
499						

2.5R Series Pre-burn Data 2021-10-15 Total time (h) 8.48

Load time	Load type	Fuel added	Moisture		Time	Flue Temp
(-)	(-)	(lbs)	(DB %)		(min)	(°F)
2021-10-15 08:49	Kindling & SUF	8.16	15	**Pre-Charge (min)**	58	311.1
2021-10-15 09:48	High fire	17.63	19.1	**Conditioning (min)**	92	556.5
2021-10-15 11:21	Medium fire	20.47	20.2	**Load (min)**	359	368.1

	Average Tflue (°F)	**311.1**		**556.5**		**368.1**
	Pre-Charge (min)	**58**	**Conditioning (min)**	**92**	**Load (min)**	**359**
Index	**Date & Time**	**Flue (F)**	**Date & Time**	**Flue (F)**	**Date & Time**	**Flue (F)**
0	2021-10-15 08:49	81.5	2021-10-15 09:48	426.2	2021-10-15 11:21	443.9
1	2021-10-15 08:50	81.2	2021-10-15 09:49	480.9	2021-10-15 11:22	403.8
2	2021-10-15 08:51	80.9	2021-10-15 09:50	407.8	2021-10-15 11:23	385.0
3	2021-10-15 08:52	80.6	2021-10-15 09:51	391.7	2021-10-15 11:24	398.3
4	2021-10-15 08:53	80.7	2021-10-15 09:52	426.4	2021-10-15 11:25	428.0
5	2021-10-15 08:54	82.5	2021-10-15 09:53	495.7	2021-10-15 11:26	492.4
6	2021-10-15 08:55	111.1	2021-10-15 09:54	554.9	2021-10-15 11:27	546.1
7	2021-10-15 08:56	133.2	2021-10-15 09:55	527.1	2021-10-15 11:28	541.3
8	2021-10-15 08:57	143.8	2021-10-15 09:56	485.2	2021-10-15 11:29	536.1
9	2021-10-15 08:58	166.9	2021-10-15 09:57	469.4	2021-10-15 11:30	538.3
10	2021-10-15 08:59	193.2	2021-10-15 09:58	467.0	2021-10-15 11:31	523.3
11	2021-10-15 09:00	227.0	2021-10-15 09:59	466.3	2021-10-15 11:32	504.0
12	2021-10-15 09:01	232.5	2021-10-15 10:00	459.7	2021-10-15 11:33	503.6
13	2021-10-15 09:02	229.4	2021-10-15 10:01	446.8	2021-10-15 11:34	509.8
14	2021-10-15 09:03	236.2	2021-10-15 10:02	436.5	2021-10-15 11:35	515.7
15	2021-10-15 09:04	254.9	2021-10-15 10:03	429.6	2021-10-15 11:36	523.2
16	2021-10-15 09:05	271.4	2021-10-15 10:04	426.4	2021-10-15 11:37	525.4
17	2021-10-15 09:06	281.6	2021-10-15 10:05	426.1	2021-10-15 11:38	514.7
18	2021-10-15 09:07	294.9	2021-10-15 10:06	426.5	2021-10-15 11:39	504.1
19	2021-10-15 09:08	300.2	2021-10-15 10:07	427.9	2021-10-15 11:40	499.2
20	2021-10-15 09:09	307.7	2021-10-15 10:08	432.5	2021-10-15 11:41	495.8
21	2021-10-15 09:10	316.5	2021-10-15 10:09	440.4	2021-10-15 11:42	497.5
22	2021-10-15 09:11	331.2	2021-10-15 10:10	448.8	2021-10-15 11:43	505.2
23	2021-10-15 09:12	328.4	2021-10-15 10:11	475.9	2021-10-15 11:44	510.6
24	2021-10-15 09:13	323.2	2021-10-15 10:12	506.9	2021-10-15 11:45	514.1
25	2021-10-15 09:14	321.4	2021-10-15 10:13	535.6	2021-10-15 11:46	516.7
26	2021-10-15 09:15	323.7	2021-10-15 10:14	554.4	2021-10-15 11:47	517.8
27	2021-10-15 09:16	329.7	2021-10-15 10:15	562.4	2021-10-15 11:48	517.9
28	2021-10-15 09:17	354.1	2021-10-15 10:16	567.5	2021-10-15 11:49	516.8
29	2021-10-15 09:18	385.4	2021-10-15 10:17	568.7	2021-10-15 11:50	514.9
30	2021-10-15 09:19	392.1	2021-10-15 10:18	570.1	2021-10-15 11:51	512.4
31	2021-10-15 09:20	392.2	2021-10-15 10:19	573.7	2021-10-15 11:52	511.6
32	2021-10-15 09:21	387.1	2021-10-15 10:20	571.7	2021-10-15 11:53	510.6
33	2021-10-15 09:22	380.7	2021-10-15 10:21	571.2	2021-10-15 11:54	508.1
34	2021-10-15 09:23	380.0	2021-10-15 10:22	571.3	2021-10-15 11:55	507.8
35	2021-10-15 09:24	382.4	2021-10-15 10:23	573.8	2021-10-15 11:56	505.6
36	2021-10-15 09:25	383.4	2021-10-15 10:24	579.2	2021-10-15 11:57	503.8
37	2021-10-15 09:26	379.1	2021-10-15 10:25	584.1	2021-10-15 11:58	501.9
38	2021-10-15 09:27	378.8	2021-10-15 10:26	588.6	2021-10-15 11:59	501.2
39	2021-10-15 09:28	374.1	2021-10-15 10:27	593.5	2021-10-15 12:00	500.2
40	2021-10-15 09:29	371.4	2021-10-15 10:28	597.0	2021-10-15 12:01	498.7
41	2021-10-15 09:30	371.4	2021-10-15 10:29	599.8	2021-10-15 12:02	498.6
42	2021-10-15 09:31	366.1	2021-10-15 10:30	602.8	2021-10-15 12:03	497.5
43	2021-10-15 09:32	366.6	2021-10-15 10:31	607.3	2021-10-15 12:04	497.2
44	2021-10-15 09:33	369.9	2021-10-15 10:32	612.3	2021-10-15 12:05	497.7
45	2021-10-15 09:34	372.5	2021-10-15 10:33	619.3	2021-10-15 12:06	497.9
46	2021-10-15 09:35	377.7	2021-10-15 10:34	628.3	2021-10-15 12:07	499.9
47	2021-10-15 09:36	383.6	2021-10-15 10:35	634.7	2021-10-15 12:08	500.4
48	2021-10-15 09:37	392.3	2021-10-15 10:36	642.4	2021-10-15 12:09	502.5
49	2021-10-15 09:38	401.8	2021-10-15 10:37	647.8	2021-10-15 12:10	505.2

50	2021-10-15 09:39	414.8	2021-10-15 10:38	655.1	2021-10-15 12:11	507.4
51	2021-10-15 09:40	423.2	2021-10-15 10:39	658.8	2021-10-15 12:12	509.4
52	2021-10-15 09:41	429.2	2021-10-15 10:40	660.6	2021-10-15 12:13	510.9
53	2021-10-15 09:42	434.9	2021-10-15 10:41	663.7	2021-10-15 12:14	513.1
54	2021-10-15 09:43	438.7	2021-10-15 10:42	667.1	2021-10-15 12:15	516.1
55	2021-10-15 09:44	437.7	2021-10-15 10:43	667.9	2021-10-15 12:16	519.6
56	2021-10-15 09:45	433.3	2021-10-15 10:44	669.3	2021-10-15 12:17	522.0
57	2021-10-15 09:46	427.5	2021-10-15 10:45	669.7	2021-10-15 12:18	526.5
58	2021-10-15 09:47	425.8	2021-10-15 10:46	673.4	2021-10-15 12:19	528.5
59			2021-10-15 10:47	681.6	2021-10-15 12:20	533.3
60			2021-10-15 10:48	681.6	2021-10-15 12:21	536.1
61			2021-10-15 10:49	672.3	2021-10-15 12:22	539.7
62			2021-10-15 10:50	664.9	2021-10-15 12:23	542.7
63			2021-10-15 10:51	661.3	2021-10-15 12:24	544.8
64			2021-10-15 10:52	658.5	2021-10-15 12:25	547.1
65			2021-10-15 10:53	658.9	2021-10-15 12:26	549.9
66			2021-10-15 10:54	658.8	2021-10-15 12:27	552.6
67			2021-10-15 10:55	651.7	2021-10-15 12:28	556.7
68			2021-10-15 10:56	645.6	2021-10-15 12:29	557.9
69			2021-10-15 10:57	639.0	2021-10-15 12:30	562.1
70			2021-10-15 10:58	631.2	2021-10-15 12:31	565.7
71			2021-10-15 10:59	623.6	2021-10-15 12:32	569.9
72			2021-10-15 11:00	618.2	2021-10-15 12:33	573.5
73			2021-10-15 11:01	614.3	2021-10-15 12:34	577.8
74			2021-10-15 11:02	606.8	2021-10-15 12:35	583.9
75			2021-10-15 11:03	592.3	2021-10-15 12:36	591.1
76			2021-10-15 11:04	576.7	2021-10-15 12:37	598.6
77			2021-10-15 11:05	565.0	2021-10-15 12:38	601.4
78			2021-10-15 11:06	554.9	2021-10-15 12:39	601.5
79			2021-10-15 11:07	546.1	2021-10-15 12:40	602.5
80			2021-10-15 11:08	537.5	2021-10-15 12:41	604.3
81			2021-10-15 11:09	529.7	2021-10-15 12:42	604.8
82			2021-10-15 11:10	520.2	2021-10-15 12:43	602.6
83			2021-10-15 11:11	513.2	2021-10-15 12:44	598.3
84			2021-10-15 11:12	506.2	2021-10-15 12:45	593.5
85			2021-10-15 11:13	499.2	2021-10-15 12:46	587.2
86			2021-10-15 11:14	492.9	2021-10-15 12:47	580.3
87			2021-10-15 11:15	486.1	2021-10-15 12:48	570.4
88			2021-10-15 11:16	480.2	2021-10-15 12:49	563.3
89			2021-10-15 11:17	473.7	2021-10-15 12:50	556.5
90			2021-10-15 11:18	467.9	2021-10-15 12:51	552.8
91			2021-10-15 11:19	462.1	2021-10-15 12:52	548.2
92			2021-10-15 11:20	455.9	2021-10-15 12:53	545.4
93					2021-10-15 12:54	542.4
94					2021-10-15 12:55	536.7
95					2021-10-15 12:56	530.0
96					2021-10-15 12:57	522.9
97					2021-10-15 12:58	516.7
98					2021-10-15 12:59	510.8
99					2021-10-15 13:00	505.8
100					2021-10-15 13:01	501.3
101					2021-10-15 13:02	495.7
102					2021-10-15 13:03	488.6
103					2021-10-15 13:04	480.8
104					2021-10-15 13:05	473.6
105					2021-10-15 13:06	467.4
106					2021-10-15 13:07	461.2
107					2021-10-15 13:08	454.9
108					2021-10-15 13:09	450.3
109					2021-10-15 13:10	445.0
110					2021-10-15 13:11	440.7

111					2021-10-15 13:12	434.8
112					2021-10-15 13:13	430.9
113					2021-10-15 13:14	427.0
114					2021-10-15 13:15	422.0
115					2021-10-15 13:16	417.9
116					2021-10-15 13:17	414.3
117					2021-10-15 13:18	409.4
118					2021-10-15 13:19	405.8
119					2021-10-15 13:20	403.5
120					2021-10-15 13:21	400.1
121					2021-10-15 13:22	397.3
122					2021-10-15 13:23	394.3
123					2021-10-15 13:24	392.8
124					2021-10-15 13:25	390.4
125					2021-10-15 13:26	388.9
126					2021-10-15 13:27	386.9
127					2021-10-15 13:28	385.5
128					2021-10-15 13:29	383.4
129					2021-10-15 13:30	381.3
130					2021-10-15 13:31	379.4
131					2021-10-15 13:32	377.3
132					2021-10-15 13:33	375.3
133					2021-10-15 13:34	374.0
134					2021-10-15 13:35	372.2
135					2021-10-15 13:36	370.7
136					2021-10-15 13:37	368.5
137					2021-10-15 13:38	366.5
138					2021-10-15 13:39	364.1
139					2021-10-15 13:40	362.2
140					2021-10-15 13:41	359.6
141					2021-10-15 13:42	356.8
142					2021-10-15 13:43	354.6
143					2021-10-15 13:44	352.5
144					2021-10-15 13:45	350.5
145					2021-10-15 13:46	348.1
146					2021-10-15 13:47	345.7
147					2021-10-15 13:48	343.9
148					2021-10-15 13:49	343.2
149					2021-10-15 13:50	340.9
150					2021-10-15 13:51	338.9
151					2021-10-15 13:52	337.8
152					2021-10-15 13:53	335.4
153					2021-10-15 13:54	333.9
154					2021-10-15 13:55	333.0
155					2021-10-15 13:56	331.3
156					2021-10-15 13:57	330.6
157					2021-10-15 13:58	329.3
158					2021-10-15 13:59	327.8
159					2021-10-15 14:00	326.4
160					2021-10-15 14:01	325.0
161					2021-10-15 14:02	324.0
162					2021-10-15 14:03	322.5
163					2021-10-15 14:04	321.7
164					2021-10-15 14:05	321.0
165					2021-10-15 14:06	320.1
166					2021-10-15 14:07	319.0
167					2021-10-15 14:08	318.3
168					2021-10-15 14:09	317.0
169					2021-10-15 14:10	316.7
170					2021-10-15 14:11	315.2
171					2021-10-15 14:12	315.2

172					2021-10-15 14:13	314.2
173					2021-10-15 14:14	312.6
174					2021-10-15 14:15	311.1
175					2021-10-15 14:16	310.5
176					2021-10-15 14:17	310.0
177					2021-10-15 14:18	308.7
178					2021-10-15 14:19	308.6
179					2021-10-15 14:20	307.8
180					2021-10-15 14:21	307.1
181					2021-10-15 14:22	306.4
182					2021-10-15 14:23	306.1
183					2021-10-15 14:24	305.4
184					2021-10-15 14:25	304.7
185					2021-10-15 14:26	303.7
186					2021-10-15 14:27	302.9
187					2021-10-15 14:28	302.9
188					2021-10-15 14:29	302.3
189					2021-10-15 14:30	302.3
190					2021-10-15 14:31	301.3
191					2021-10-15 14:32	300.4
192					2021-10-15 14:33	300.1
193					2021-10-15 14:34	299.8
194					2021-10-15 14:35	300.1
195					2021-10-15 14:36	299.3
196					2021-10-15 14:37	298.9
197					2021-10-15 14:38	298.8
198					2021-10-15 14:39	298.1
199					2021-10-15 14:40	297.8
200					2021-10-15 14:41	297.2
201					2021-10-15 14:42	297.4
202					2021-10-15 14:43	296.8
203					2021-10-15 14:44	296.8
204					2021-10-15 14:45	296.3
205					2021-10-15 14:46	295.9
206					2021-10-15 14:47	294.8
207					2021-10-15 14:48	295.0
208					2021-10-15 14:49	295.7
209					2021-10-15 14:50	295.4
210					2021-10-15 14:51	294.7
211					2021-10-15 14:52	294.9
212					2021-10-15 14:53	294.9
213					2021-10-15 14:54	295.6
214					2021-10-15 14:55	294.7
215					2021-10-15 14:56	294.7
216					2021-10-15 14:57	294.6
217					2021-10-15 14:58	294.4
218					2021-10-15 14:59	294.0
219					2021-10-15 15:00	293.7
220					2021-10-15 15:01	294.2
221					2021-10-15 15:02	294.1
222					2021-10-15 15:03	294.3
223					2021-10-15 15:04	293.2
224					2021-10-15 15:05	293.7
225					2021-10-15 15:06	292.6
226					2021-10-15 15:07	292.7
227					2021-10-15 15:08	292.2
228					2021-10-15 15:09	292.3
229					2021-10-15 15:10	291.8
230					2021-10-15 15:11	291.4
231					2021-10-15 15:12	291.1
232					2021-10-15 15:13	291.0

233					2021-10-15 15:14	290.3
234					2021-10-15 15:15	290.6
235					2021-10-15 15:16	290.5
236					2021-10-15 15:17	290.6
237					2021-10-15 15:18	290.6
238					2021-10-15 15:19	290.5
239					2021-10-15 15:20	290.4
240					2021-10-15 15:21	290.0
241					2021-10-15 15:22	289.4
242					2021-10-15 15:23	289.4
243					2021-10-15 15:24	288.9
244					2021-10-15 15:25	288.5
245					2021-10-15 15:26	288.6
246					2021-10-15 15:27	288.7
247					2021-10-15 15:28	288.7
248					2021-10-15 15:29	288.5
249					2021-10-15 15:30	288.5
250					2021-10-15 15:31	288.5
251					2021-10-15 15:32	287.7
252					2021-10-15 15:33	287.8
253					2021-10-15 15:34	287.6
254					2021-10-15 15:35	287.0
255					2021-10-15 15:36	286.7
256					2021-10-15 15:37	286.4
257					2021-10-15 15:38	286.1
258					2021-10-15 15:39	286.0
259					2021-10-15 15:40	285.6
260					2021-10-15 15:41	286.1
261					2021-10-15 15:42	285.1
262					2021-10-15 15:43	285.2
263					2021-10-15 15:44	284.8
264					2021-10-15 15:45	284.8
265					2021-10-15 15:46	284.7
266					2021-10-15 15:47	284.8
267					2021-10-15 15:48	284.6
268					2021-10-15 15:49	283.7
269					2021-10-15 15:50	283.9
270					2021-10-15 15:51	283.5
271					2021-10-15 15:52	283.3
272					2021-10-15 15:53	282.5
273					2021-10-15 15:54	282.5
274					2021-10-15 15:55	281.5
275					2021-10-15 15:56	281.4
276					2021-10-15 15:57	281.0
277					2021-10-15 15:58	280.8
278					2021-10-15 15:59	280.3
279					2021-10-15 16:00	279.9
280					2021-10-15 16:01	279.6
281					2021-10-15 16:02	278.9
282					2021-10-15 16:03	278.5
283					2021-10-15 16:04	278.2
284					2021-10-15 16:05	278.0
285					2021-10-15 16:06	277.3
286					2021-10-15 16:07	276.8
287					2021-10-15 16:08	276.0
288					2021-10-15 16:09	275.6
289					2021-10-15 16:10	275.1
290					2021-10-15 16:11	274.3
291					2021-10-15 16:12	273.8
292					2021-10-15 16:13	273.4
293					2021-10-15 16:14	273.2

294					2021-10-15 16:15	272.4
295					2021-10-15 16:16	272.3
296					2021-10-15 16:17	272.4
297					2021-10-15 16:18	271.5
298					2021-10-15 16:19	270.6
299					2021-10-15 16:20	270.2
300					2021-10-15 16:21	270.1
301					2021-10-15 16:22	269.2
302					2021-10-15 16:23	269.1
303					2021-10-15 16:24	268.1
304					2021-10-15 16:25	267.3
305					2021-10-15 16:26	267.0
306					2021-10-15 16:27	266.3
307					2021-10-15 16:28	266.2
308					2021-10-15 16:29	265.7
309					2021-10-15 16:30	265.0
310					2021-10-15 16:31	264.8
311					2021-10-15 16:32	264.6
312					2021-10-15 16:33	264.2
313					2021-10-15 16:34	263.7
314					2021-10-15 16:35	263.2
315					2021-10-15 16:36	262.6
316					2021-10-15 16:37	262.2
317					2021-10-15 16:38	262.1
318					2021-10-15 16:39	261.9
319					2021-10-15 16:40	261.6
320					2021-10-15 16:41	260.8
321					2021-10-15 16:42	260.6
322					2021-10-15 16:43	260.1
323					2021-10-15 16:44	259.5
324					2021-10-15 16:45	259.4
325					2021-10-15 16:46	259.2
326					2021-10-15 16:47	259.1
327					2021-10-15 16:48	258.4
328					2021-10-15 16:49	258.3
329					2021-10-15 16:50	257.7
330					2021-10-15 16:51	257.1
331					2021-10-15 16:52	256.7
332					2021-10-15 16:53	256.6
333					2021-10-15 16:54	256.4
334					2021-10-15 16:55	255.8
335					2021-10-15 16:56	255.3
336					2021-10-15 16:57	254.9
337					2021-10-15 16:58	254.7
338					2021-10-15 16:59	254.1
339					2021-10-15 17:00	253.6
340					2021-10-15 17:01	253.5
341					2021-10-15 17:02	253.4
342					2021-10-15 17:03	252.5
343					2021-10-15 17:04	252.3
344					2021-10-15 17:05	252.0
345					2021-10-15 17:06	251.5
346					2021-10-15 17:07	251.2
347					2021-10-15 17:08	250.3
348					2021-10-15 17:09	249.8
349					2021-10-15 17:10	249.3
350					2021-10-15 17:11	249.1
351					2021-10-15 17:12	249.3
352					2021-10-15 17:13	248.6
353					2021-10-15 17:14	248.0
354					2021-10-15 17:15	247.4

355					2021-10-15 17:16	246.9
356					2021-10-15 17:17	245.5
357					2021-10-15 17:18	245.2
358					2021-10-15 17:19	244.0
359					2021-10-15 17:20	243.5

2.5R Series Pre-burn Data 2021-10-19 Total time (h) 9.47

Load time	Load type	Fuel added	Moisture		Time	Flue Temp
(-)	(-)	(lbs)	(DB %)		(min)	(°F)
2021-10-19 11:12	Kindling & SUF	8.69	14.5	**Pre-Charge (min)**	51	413.4
2021-10-19 12:04	High fire	18.29	20.1	**Conditioning (min)**	96	576.1
2021-10-19 13:41	Medium fire	23.35	19.7	**Load (min)**	421	322.3

	Average Tflue (°F)	**413.4**		**576.1**		**322.3**
	Pre-Charge (min)	**51**	**Conditioning (min)**	**96**	**Load (min)**	**421**
Index	**Date & Time**	**Flue (F)**	**Date & Time**	**Flue (F)**	**Date & Time**	**Flue (F)**
0	2021-10-19 11:12	129.7	2021-10-19 12:04	435.2	2021-10-19 13:41	402.1
1	2021-10-19 11:13	240.0	2021-10-19 12:05	367.5	2021-10-19 13:42	347.7
2	2021-10-19 11:14	261.0	2021-10-19 12:06	360.4	2021-10-19 13:43	343.0
3	2021-10-19 11:15	275.1	2021-10-19 12:07	521.6	2021-10-19 13:44	450.1
4	2021-10-19 11:16	283.0	2021-10-19 12:08	554.9	2021-10-19 13:45	663.0
5	2021-10-19 11:17	277.2	2021-10-19 12:09	594.4	2021-10-19 13:46	629.4
6	2021-10-19 11:18	277.8	2021-10-19 12:10	624.9	2021-10-19 13:47	660.0
7	2021-10-19 11:19	279.5	2021-10-19 12:11	637.8	2021-10-19 13:48	641.6
8	2021-10-19 11:20	292.7	2021-10-19 12:12	645.7	2021-10-19 13:49	646.5
9	2021-10-19 11:21	309.2	2021-10-19 12:13	653.0	2021-10-19 13:50	659.0
10	2021-10-19 11:22	325.2	2021-10-19 12:14	660.6	2021-10-19 13:51	630.1
11	2021-10-19 11:23	348.1	2021-10-19 12:15	670.8	2021-10-19 13:52	603.8
12	2021-10-19 11:24	358.7	2021-10-19 12:16	676.2	2021-10-19 13:53	603.3
13	2021-10-19 11:25	390.3	2021-10-19 12:17	685.4	2021-10-19 13:54	607.4
14	2021-10-19 11:26	413.8	2021-10-19 12:18	689.7	2021-10-19 13:55	591.8
15	2021-10-19 11:27	446.9	2021-10-19 12:19	694.0	2021-10-19 13:56	573.1
16	2021-10-19 11:28	451.9	2021-10-19 12:20	700.6	2021-10-19 13:57	557.5
17	2021-10-19 11:29	468.7	2021-10-19 12:21	703.9	2021-10-19 13:58	544.9
18	2021-10-19 11:30	464.6	2021-10-19 12:22	707.2	2021-10-19 13:59	534.7
19	2021-10-19 11:31	469.6	2021-10-19 12:23	709.3	2021-10-19 14:00	527.1
20	2021-10-19 11:32	464.7	2021-10-19 12:24	709.6	2021-10-19 14:01	522.4
21	2021-10-19 11:33	457.5	2021-10-19 12:25	708.4	2021-10-19 14:02	519.1
22	2021-10-19 11:34	460.3	2021-10-19 12:26	707.1	2021-10-19 14:03	518.0
23	2021-10-19 11:35	468.8	2021-10-19 12:27	709.1	2021-10-19 14:04	517.1
24	2021-10-19 11:36	469.5	2021-10-19 12:28	704.1	2021-10-19 14:05	516.7
25	2021-10-19 11:37	472.6	2021-10-19 12:29	705.8	2021-10-19 14:06	513.9
26	2021-10-19 11:38	478.2	2021-10-19 12:30	707.9	2021-10-19 14:07	516.9
27	2021-10-19 11:39	481.8	2021-10-19 12:31	705.9	2021-10-19 14:08	517.8
28	2021-10-19 11:40	475.4	2021-10-19 12:32	704.6	2021-10-19 14:09	518.0
29	2021-10-19 11:41	473.8	2021-10-19 12:33	709.5	2021-10-19 14:10	518.2
30	2021-10-19 11:42	475.8	2021-10-19 12:34	708.0	2021-10-19 14:11	516.5
31	2021-10-19 11:43	477.7	2021-10-19 12:35	710.9	2021-10-19 14:12	517.8
32	2021-10-19 11:44	475.0	2021-10-19 12:36	712.3	2021-10-19 14:13	520.7
33	2021-10-19 11:45	475.2	2021-10-19 12:37	711.3	2021-10-19 14:14	521.9
34	2021-10-19 11:46	468.1	2021-10-19 12:38	709.5	2021-10-19 14:15	524.8
35	2021-10-19 11:47	465.3	2021-10-19 12:39	705.3	2021-10-19 14:16	524.9
36	2021-10-19 11:48	459.0	2021-10-19 12:40	704.0	2021-10-19 14:17	525.8
37	2021-10-19 11:49	453.4	2021-10-19 12:41	698.9	2021-10-19 14:18	525.4
38	2021-10-19 11:50	449.8	2021-10-19 12:42	691.5	2021-10-19 14:19	526.5
39	2021-10-19 11:51	454.3	2021-10-19 12:43	692.7	2021-10-19 14:20	525.9
40	2021-10-19 11:52	449.1	2021-10-19 12:44	689.8	2021-10-19 14:21	524.6
41	2021-10-19 11:53	445.4	2021-10-19 12:45	687.8	2021-10-19 14:22	528.0
42	2021-10-19 11:54	443.2	2021-10-19 12:46	678.6	2021-10-19 14:23	526.3
43	2021-10-19 11:55	440.1	2021-10-19 12:47	668.1	2021-10-19 14:24	526.6
44	2021-10-19 11:56	437.9	2021-10-19 12:48	666.1	2021-10-19 14:25	528.8
45	2021-10-19 11:57	435.2	2021-10-19 12:49	661.4	2021-10-19 14:26	531.3
46	2021-10-19 11:58	438.3	2021-10-19 12:50	654.0	2021-10-19 14:27	531.2
47	2021-10-19 11:59	448.6	2021-10-19 12:51	644.4	2021-10-19 14:28	535.0
48	2021-10-19 12:00	457.8	2021-10-19 12:52	635.4	2021-10-19 14:29	537.1
49	2021-10-19 12:01	455.9	2021-10-19 12:53	627.7	2021-10-19 14:30	540.6

50	2021-10-19 12:02	455.6	2021-10-19 12:54	619.7	2021-10-19 14:31	544.5
51	2021-10-19 12:03	468.2	2021-10-19 12:55	607.8	2021-10-19 14:32	553.9
52			2021-10-19 12:56	597.8	2021-10-19 14:33	562.1
53			2021-10-19 12:57	590.1	2021-10-19 14:34	566.5
54			2021-10-19 12:58	584.3	2021-10-19 14:35	563.2
55			2021-10-19 12:59	575.5	2021-10-19 14:36	562.2
56			2021-10-19 13:00	569.7	2021-10-19 14:37	562.7
57			2021-10-19 13:01	563.2	2021-10-19 14:38	568.5
58			2021-10-19 13:02	556.6	2021-10-19 14:39	571.3
59			2021-10-19 13:03	550.5	2021-10-19 14:40	568.7
60			2021-10-19 13:04	548.1	2021-10-19 14:41	567.5
61			2021-10-19 13:05	545.5	2021-10-19 14:42	563.0
62			2021-10-19 13:06	541.3	2021-10-19 14:43	563.9
63			2021-10-19 13:07	533.2	2021-10-19 14:44	564.5
64			2021-10-19 13:08	525.8	2021-10-19 14:45	564.6
65			2021-10-19 13:09	517.3	2021-10-19 14:46	565.0
66			2021-10-19 13:10	512.3	2021-10-19 14:47	557.3
67			2021-10-19 13:11	504.8	2021-10-19 14:48	550.7
68			2021-10-19 13:12	500.8	2021-10-19 14:49	543.8
69			2021-10-19 13:13	492.7	2021-10-19 14:50	535.8
70			2021-10-19 13:14	485.7	2021-10-19 14:51	532.7
71			2021-10-19 13:15	481.3	2021-10-19 14:52	528.8
72			2021-10-19 13:16	477.1	2021-10-19 14:53	522.7
73			2021-10-19 13:17	473.5	2021-10-19 14:54	514.1
74			2021-10-19 13:18	469.5	2021-10-19 14:55	507.2
75			2021-10-19 13:19	465.6	2021-10-19 14:56	502.1
76			2021-10-19 13:20	461.2	2021-10-19 14:57	495.6
77			2021-10-19 13:21	456.7	2021-10-19 14:58	491.2
78			2021-10-19 13:22	451.5	2021-10-19 14:59	486.6
79			2021-10-19 13:23	448.1	2021-10-19 15:00	485.7
80			2021-10-19 13:24	445.7	2021-10-19 15:01	482.4
81			2021-10-19 13:25	444.6	2021-10-19 15:02	482.4
82			2021-10-19 13:26	441.3	2021-10-19 15:03	482.5
83			2021-10-19 13:27	436.5	2021-10-19 15:04	479.1
84			2021-10-19 13:28	431.8	2021-10-19 15:05	472.9
85			2021-10-19 13:29	428.0	2021-10-19 15:06	465.9
86			2021-10-19 13:30	425.0	2021-10-19 15:07	458.5
87			2021-10-19 13:31	422.0	2021-10-19 15:08	452.2
88			2021-10-19 13:32	416.7	2021-10-19 15:09	445.1
89			2021-10-19 13:33	414.2	2021-10-19 15:10	438.5
90			2021-10-19 13:34	413.2	2021-10-19 15:11	432.0
91			2021-10-19 13:35	411.0	2021-10-19 15:12	427.2
92			2021-10-19 13:36	409.3	2021-10-19 15:13	421.4
93			2021-10-19 13:37	406.9	2021-10-19 15:14	416.0
94			2021-10-19 13:38	405.8	2021-10-19 15:15	412.0
95			2021-10-19 13:39	402.9	2021-10-19 15:16	409.0
96			2021-10-19 13:40	397.2	2021-10-19 15:17	405.0
97					2021-10-19 15:18	403.0
98					2021-10-19 15:19	397.6
99					2021-10-19 15:20	394.5
100					2021-10-19 15:21	392.3
101					2021-10-19 15:22	388.4
102					2021-10-19 15:23	386.2
103					2021-10-19 15:24	382.8
104					2021-10-19 15:25	380.3
105					2021-10-19 15:26	377.7
106					2021-10-19 15:27	373.5
107					2021-10-19 15:28	372.0
108					2021-10-19 15:29	369.7
109					2021-10-19 15:30	365.6
110					2021-10-19 15:31	364.3

111					2021-10-19 15:32	365.1
112					2021-10-19 15:33	363.9
113					2021-10-19 15:34	363.4
114					2021-10-19 15:35	363.9
115					2021-10-19 15:36	364.2
116					2021-10-19 15:37	366.3
117					2021-10-19 15:38	368.2
118					2021-10-19 15:39	371.6
119					2021-10-19 15:40	372.0
120					2021-10-19 15:41	370.4
121					2021-10-19 15:42	366.8
122					2021-10-19 15:43	363.2
123					2021-10-19 15:44	360.7
124					2021-10-19 15:45	357.9
125					2021-10-19 15:46	352.9
126					2021-10-19 15:47	348.3
127					2021-10-19 15:48	347.5
128					2021-10-19 15:49	346.5
129					2021-10-19 15:50	344.7
130					2021-10-19 15:51	343.9
131					2021-10-19 15:52	343.3
132					2021-10-19 15:53	340.9
133					2021-10-19 15:54	340.3
134					2021-10-19 15:55	338.4
135					2021-10-19 15:56	337.9
136					2021-10-19 15:57	335.9
137					2021-10-19 15:58	334.2
138					2021-10-19 15:59	330.9
139					2021-10-19 16:00	328.2
140					2021-10-19 16:01	326.7
141					2021-10-19 16:02	324.8
142					2021-10-19 16:03	322.6
143					2021-10-19 16:04	321.7
144					2021-10-19 16:05	320.6
145					2021-10-19 16:06	318.1
146					2021-10-19 16:07	315.8
147					2021-10-19 16:08	315.4
148					2021-10-19 16:09	313.7
149					2021-10-19 16:10	312.3
150					2021-10-19 16:11	311.4
151					2021-10-19 16:12	310.1
152					2021-10-19 16:13	309.4
153					2021-10-19 16:14	307.1
154					2021-10-19 16:15	306.5
155					2021-10-19 16:16	306.0
156					2021-10-19 16:17	306.3
157					2021-10-19 16:18	304.1
158					2021-10-19 16:19	302.7
159					2021-10-19 16:20	301.6
160					2021-10-19 16:21	301.6
161					2021-10-19 16:22	300.0
162					2021-10-19 16:23	299.2
163					2021-10-19 16:24	298.4
164					2021-10-19 16:25	298.2
165					2021-10-19 16:26	296.3
166					2021-10-19 16:27	295.1
167					2021-10-19 16:28	293.8
168					2021-10-19 16:29	294.0
169					2021-10-19 16:30	293.0
170					2021-10-19 16:31	291.0
171					2021-10-19 16:32	292.0

172					2021-10-19 16:33	290.5
173					2021-10-19 16:34	289.0
174					2021-10-19 16:35	288.6
175					2021-10-19 16:36	287.9
176					2021-10-19 16:37	286.7
177					2021-10-19 16:38	286.2
178					2021-10-19 16:39	286.3
179					2021-10-19 16:40	284.8
180					2021-10-19 16:41	285.2
181					2021-10-19 16:42	284.7
182					2021-10-19 16:43	284.3
183					2021-10-19 16:44	283.4
184					2021-10-19 16:45	282.7
185					2021-10-19 16:46	281.7
186					2021-10-19 16:47	281.6
187					2021-10-19 16:48	281.3
188					2021-10-19 16:49	280.4
189					2021-10-19 16:50	280.3
190					2021-10-19 16:51	279.8
191					2021-10-19 16:52	279.2
192					2021-10-19 16:53	278.5
193					2021-10-19 16:54	279.1
194					2021-10-19 16:55	278.1
195					2021-10-19 16:56	277.0
196					2021-10-19 16:57	277.2
197					2021-10-19 16:58	275.6
198					2021-10-19 16:59	276.0
199					2021-10-19 17:00	275.5
200					2021-10-19 17:01	274.3
201					2021-10-19 17:02	274.6
202					2021-10-19 17:03	274.7
203					2021-10-19 17:04	273.8
204					2021-10-19 17:05	273.5
205					2021-10-19 17:06	273.8
206					2021-10-19 17:07	273.2
207					2021-10-19 17:08	271.7
208					2021-10-19 17:09	272.0
209					2021-10-19 17:10	272.0
210					2021-10-19 17:11	272.8
211					2021-10-19 17:12	271.7
212					2021-10-19 17:13	271.3
213					2021-10-19 17:14	270.4
214					2021-10-19 17:15	269.6
215					2021-10-19 17:16	270.2
216					2021-10-19 17:17	269.9
217					2021-10-19 17:18	270.1
218					2021-10-19 17:19	268.7
219					2021-10-19 17:20	269.1
220					2021-10-19 17:21	268.8
221					2021-10-19 17:22	267.6
222					2021-10-19 17:23	267.8
223					2021-10-19 17:24	267.9
224					2021-10-19 17:25	267.4
225					2021-10-19 17:26	266.5
226					2021-10-19 17:27	266.0
227					2021-10-19 17:28	265.4
228					2021-10-19 17:29	264.6
229					2021-10-19 17:30	263.3
230					2021-10-19 17:31	263.1
231					2021-10-19 17:32	263.0
232					2021-10-19 17:33	262.9

233					2021-10-19 17:34	262.2
234					2021-10-19 17:35	261.4
235					2021-10-19 17:36	260.9
236					2021-10-19 17:37	260.7
237					2021-10-19 17:38	260.1
238					2021-10-19 17:39	259.8
239					2021-10-19 17:40	258.9
240					2021-10-19 17:41	259.4
241					2021-10-19 17:42	258.0
242					2021-10-19 17:43	258.2
243					2021-10-19 17:44	256.9
244					2021-10-19 17:45	257.6
245					2021-10-19 17:46	257.1
246					2021-10-19 17:47	256.8
247					2021-10-19 17:48	255.9
248					2021-10-19 17:49	255.6
249					2021-10-19 17:50	255.0
250					2021-10-19 17:51	255.1
251					2021-10-19 17:52	254.3
252					2021-10-19 17:53	253.6
253					2021-10-19 17:54	253.5
254					2021-10-19 17:55	253.4
255					2021-10-19 17:56	253.0
256					2021-10-19 17:57	252.1
257					2021-10-19 17:58	251.4
258					2021-10-19 17:59	251.2
259					2021-10-19 18:00	250.6
260					2021-10-19 18:01	250.5
261					2021-10-19 18:02	249.7
262					2021-10-19 18:03	249.9
263					2021-10-19 18:04	250.0
264					2021-10-19 18:05	249.5
265					2021-10-19 18:06	249.3
266					2021-10-19 18:07	248.1
267					2021-10-19 18:08	248.3
268					2021-10-19 18:09	247.9
269					2021-10-19 18:10	247.9
270					2021-10-19 18:11	246.9
271					2021-10-19 18:12	246.8
272					2021-10-19 18:13	247.0
273					2021-10-19 18:14	246.1
274					2021-10-19 18:15	246.5
275					2021-10-19 18:16	245.4
276					2021-10-19 18:17	245.5
277					2021-10-19 18:18	244.7
278					2021-10-19 18:19	244.4
279					2021-10-19 18:20	244.2
280					2021-10-19 18:21	243.8
281					2021-10-19 18:22	243.8
282					2021-10-19 18:23	242.7
283					2021-10-19 18:24	242.9
284					2021-10-19 18:25	243.0
285					2021-10-19 18:26	242.3
286					2021-10-19 18:27	241.3
287					2021-10-19 18:28	241.3
288					2021-10-19 18:29	241.2
289					2021-10-19 18:30	241.2
290					2021-10-19 18:31	240.7
291					2021-10-19 18:32	240.6
292					2021-10-19 18:33	239.9
293					2021-10-19 18:34	239.5

294					2021-10-19 18:35	238.6
295					2021-10-19 18:36	238.8
296					2021-10-19 18:37	238.4
297					2021-10-19 18:38	238.5
298					2021-10-19 18:39	237.5
299					2021-10-19 18:40	236.8
300					2021-10-19 18:41	237.2
301					2021-10-19 18:42	236.2
302					2021-10-19 18:43	236.5
303					2021-10-19 18:44	235.6
304					2021-10-19 18:45	235.6
305					2021-10-19 18:46	234.9
306					2021-10-19 18:47	234.5
307					2021-10-19 18:48	233.9
308					2021-10-19 18:49	233.2
309					2021-10-19 18:50	233.1
310					2021-10-19 18:51	232.7
311					2021-10-19 18:52	232.7
312					2021-10-19 18:53	232.3
313					2021-10-19 18:54	231.9
314					2021-10-19 18:55	231.7
315					2021-10-19 18:56	230.5
316					2021-10-19 18:57	230.4
317					2021-10-19 18:58	229.8
318					2021-10-19 18:59	229.2
319					2021-10-19 19:00	229.1
320					2021-10-19 19:01	228.6
321					2021-10-19 19:02	228.1
322					2021-10-19 19:03	227.9
323					2021-10-19 19:04	227.2
324					2021-10-19 19:05	227.9
325					2021-10-19 19:06	227.2
326					2021-10-19 19:07	226.9
327					2021-10-19 19:08	226.1
328					2021-10-19 19:09	226.1
329					2021-10-19 19:10	225.3
330					2021-10-19 19:11	225.2
331					2021-10-19 19:12	224.6
332					2021-10-19 19:13	224.5
333					2021-10-19 19:14	223.9
334					2021-10-19 19:15	223.4
335					2021-10-19 19:16	223.4
336					2021-10-19 19:17	223.1
337					2021-10-19 19:18	222.6
338					2021-10-19 19:19	222.4
339					2021-10-19 19:20	221.6
340					2021-10-19 19:21	220.9
341					2021-10-19 19:22	221.2
342					2021-10-19 19:23	220.7
343					2021-10-19 19:24	220.5
344					2021-10-19 19:25	220.6
345					2021-10-19 19:26	220.1
346					2021-10-19 19:27	219.9
347					2021-10-19 19:28	219.3
348					2021-10-19 19:29	219.4
349					2021-10-19 19:30	219.0
350					2021-10-19 19:31	218.9
351					2021-10-19 19:32	218.4
352					2021-10-19 19:33	217.9
353					2021-10-19 19:34	217.7
354					2021-10-19 19:35	217.3

355					2021-10-19 19:36	216.9
356					2021-10-19 19:37	216.8
357					2021-10-19 19:38	216.2
358					2021-10-19 19:39	215.8
359					2021-10-19 19:40	215.8
360					2021-10-19 19:41	215.2
361					2021-10-19 19:42	215.1
362					2021-10-19 19:43	214.9
363					2021-10-19 19:44	214.3
364					2021-10-19 19:45	213.9
365					2021-10-19 19:46	214.0
366					2021-10-19 19:47	213.8
367					2021-10-19 19:48	213.4
368					2021-10-19 19:49	213.4
369					2021-10-19 19:50	213.0
370					2021-10-19 19:51	212.4
371					2021-10-19 19:52	212.2
372					2021-10-19 19:53	212.2
373					2021-10-19 19:54	212.1
374					2021-10-19 19:55	211.8
375					2021-10-19 19:56	211.5
376					2021-10-19 19:57	211.1
377					2021-10-19 19:58	211.5
378					2021-10-19 19:59	210.9
379					2021-10-19 20:00	210.9
380					2021-10-19 20:01	210.7
381					2021-10-19 20:02	209.5
382					2021-10-19 20:03	209.9
383					2021-10-19 20:04	209.1
384					2021-10-19 20:05	209.0
385					2021-10-19 20:06	208.8
386					2021-10-19 20:07	209.1
387					2021-10-19 20:08	208.9
388					2021-10-19 20:09	208.9
389					2021-10-19 20:10	208.5
390					2021-10-19 20:11	208.1
391					2021-10-19 20:12	207.4
392					2021-10-19 20:13	207.6
393					2021-10-19 20:14	207.2
394					2021-10-19 20:15	206.3
395					2021-10-19 20:16	206.2
396					2021-10-19 20:17	206.2
397					2021-10-19 20:18	205.5
398					2021-10-19 20:19	205.5
399					2021-10-19 20:20	204.6
400					2021-10-19 20:21	204.9
401					2021-10-19 20:22	205.0
402					2021-10-19 20:23	204.1
403					2021-10-19 20:24	203.4
404					2021-10-19 20:25	203.1
405					2021-10-19 20:26	203.2
406					2021-10-19 20:27	202.6
407					2021-10-19 20:28	202.3
408					2021-10-19 20:29	201.8
409					2021-10-19 20:30	201.3
410					2021-10-19 20:31	201.1
411					2021-10-19 20:32	200.7
412					2021-10-19 20:33	200.3
413					2021-10-19 20:34	199.5
414					2021-10-19 20:35	198.6
415					2021-10-19 20:36	198.8

416					2021-10-19 20:37	198.2
417					2021-10-19 20:38	197.9
418					2021-10-19 20:39	197.7
419					2021-10-19 20:40	197.5
420					2021-10-19 20:41	197.0
421					2021-10-19 20:42	197.2

2.5R Series Pre-burn Data 2021-10-20 Total time (h) 9.10

Load time	Load type	Fuel added	Moisture		Time	Flue Temp
(-)	(-)	(lbs)	(DB %)		(min)	(°F)
2021-10-20 10:28	Kindling & SUF	8.77	14.6	**Pre-Charge (min)**	47	437.3
2021-10-20 11:16	High fire	18.76	19.5	**Conditioning (min)**	120	566.3
2021-10-20 13:16	Medium fire	23.28	19.6	**Load (min)**	379	381.9

	Average Tflue (°F)	**437.3**		**566.3**		**381.9**
	Pre-Charge (min)	**47**	**Conditioning (min)**	**120**	**Load (min)**	**379**
Index	**Date & Time**	**Flue (F)**	**Date & Time**	**Flue (F)**	**Date & Time**	**Flue (F)**
0	2021-10-20 10:28	84.7	2021-10-20 11:16	562.2	2021-10-20 13:16	364.0
1	2021-10-20 10:29	189.5	2021-10-20 11:17	463.4	2021-10-20 13:17	327.0
2	2021-10-20 10:30	259.8	2021-10-20 11:18	457.0	2021-10-20 13:18	321.2
3	2021-10-20 10:31	243.0	2021-10-20 11:19	475.1	2021-10-20 13:19	423.1
4	2021-10-20 10:32	225.9	2021-10-20 11:20	534.0	2021-10-20 13:20	687.1
5	2021-10-20 10:33	226.7	2021-10-20 11:21	508.5	2021-10-20 13:21	661.1
6	2021-10-20 10:34	240.3	2021-10-20 11:22	486.1	2021-10-20 13:22	689.6
7	2021-10-20 10:35	256.1	2021-10-20 11:23	511.2	2021-10-20 13:23	626.8
8	2021-10-20 10:36	274.4	2021-10-20 11:24	539.8	2021-10-20 13:24	605.6
9	2021-10-20 10:37	303.8	2021-10-20 11:25	556.6	2021-10-20 13:25	610.9
10	2021-10-20 10:38	309.6	2021-10-20 11:26	570.4	2021-10-20 13:26	601.8
11	2021-10-20 10:39	318.3	2021-10-20 11:27	576.0	2021-10-20 13:27	588.9
12	2021-10-20 10:40	311.0	2021-10-20 11:28	577.1	2021-10-20 13:28	584.8
13	2021-10-20 10:41	305.0	2021-10-20 11:29	580.5	2021-10-20 13:29	583.2
14	2021-10-20 10:42	312.5	2021-10-20 11:30	577.5	2021-10-20 13:30	587.4
15	2021-10-20 10:43	347.4	2021-10-20 11:31	573.2	2021-10-20 13:31	594.2
16	2021-10-20 10:44	429.1	2021-10-20 11:32	577.9	2021-10-20 13:32	596.8
17	2021-10-20 10:45	481.6	2021-10-20 11:33	609.7	2021-10-20 13:33	598.5
18	2021-10-20 10:46	485.9	2021-10-20 11:34	624.2	2021-10-20 13:34	604.0
19	2021-10-20 10:47	481.2	2021-10-20 11:35	625.8	2021-10-20 13:35	615.4
20	2021-10-20 10:48	500.3	2021-10-20 11:36	625.1	2021-10-20 13:36	624.6
21	2021-10-20 10:49	513.6	2021-10-20 11:37	630.0	2021-10-20 13:37	620.8
22	2021-10-20 10:50	533.9	2021-10-20 11:38	635.9	2021-10-20 13:38	617.1
23	2021-10-20 10:51	550.8	2021-10-20 11:39	635.9	2021-10-20 13:39	614.8
24	2021-10-20 10:52	565.6	2021-10-20 11:40	638.6	2021-10-20 13:40	613.4
25	2021-10-20 10:53	562.0	2021-10-20 11:41	643.1	2021-10-20 13:41	611.5
26	2021-10-20 10:54	577.5	2021-10-20 11:42	648.0	2021-10-20 13:42	613.4
27	2021-10-20 10:55	589.6	2021-10-20 11:43	651.3	2021-10-20 13:43	612.6
28	2021-10-20 10:56	583.3	2021-10-20 11:44	654.2	2021-10-20 13:44	611.9
29	2021-10-20 10:57	572.7	2021-10-20 11:45	657.7	2021-10-20 13:45	612.1
30	2021-10-20 10:58	560.6	2021-10-20 11:46	661.5	2021-10-20 13:46	611.3
31	2021-10-20 10:59	548.3	2021-10-20 11:47	666.0	2021-10-20 13:47	611.0
32	2021-10-20 11:00	530.8	2021-10-20 11:48	670.9	2021-10-20 13:48	612.8
33	2021-10-20 11:01	521.1	2021-10-20 11:49	673.6	2021-10-20 13:49	615.3
34	2021-10-20 11:02	529.0	2021-10-20 11:50	676.9	2021-10-20 13:50	616.6
35	2021-10-20 11:03	537.7	2021-10-20 11:51	679.0	2021-10-20 13:51	618.0
36	2021-10-20 11:04	539.2	2021-10-20 11:52	678.5	2021-10-20 13:52	614.6
37	2021-10-20 11:05	531.2	2021-10-20 11:53	684.8	2021-10-20 13:53	613.9
38	2021-10-20 11:06	517.2	2021-10-20 11:54	686.3	2021-10-20 13:54	612.3
39	2021-10-20 11:07	509.1	2021-10-20 11:55	688.8	2021-10-20 13:55	613.1
40	2021-10-20 11:08	502.9	2021-10-20 11:56	687.7	2021-10-20 13:56	610.6
41	2021-10-20 11:09	501.0	2021-10-20 11:57	690.3	2021-10-20 13:57	609.3
42	2021-10-20 11:10	499.2	2021-10-20 11:58	694.5	2021-10-20 13:58	607.8
43	2021-10-20 11:11	499.1	2021-10-20 11:59	693.8	2021-10-20 13:59	606.8
44	2021-10-20 11:12	503.6	2021-10-20 12:00	692.5	2021-10-20 14:00	604.1
45	2021-10-20 11:13	506.1	2021-10-20 12:01	692.9	2021-10-20 14:01	603.8
46	2021-10-20 11:14	508.7	2021-10-20 12:02	693.9	2021-10-20 14:02	602.3
47	2021-10-20 11:15	509.7	2021-10-20 12:03	698.5	2021-10-20 14:03	600.9
48			2021-10-20 12:04	700.4	2021-10-20 14:04	597.5
49			2021-10-20 12:05	697.0	2021-10-20 14:05	595.3

50			2021-10-20 12:06	694.1	2021-10-20 14:06	594.0
51			2021-10-20 12:07	694.2	2021-10-20 14:07	593.7
52			2021-10-20 12:08	692.1	2021-10-20 14:08	593.1
53			2021-10-20 12:09	688.4	2021-10-20 14:09	593.3
54			2021-10-20 12:10	682.2	2021-10-20 14:10	593.8
55			2021-10-20 12:11	670.5	2021-10-20 14:11	593.2
56			2021-10-20 12:12	660.1	2021-10-20 14:12	592.8
57			2021-10-20 12:13	652.3	2021-10-20 14:13	592.3
58			2021-10-20 12:14	643.7	2021-10-20 14:14	590.8
59			2021-10-20 12:15	637.2	2021-10-20 14:15	593.0
60			2021-10-20 12:16	633.1	2021-10-20 14:16	592.2
61			2021-10-20 12:17	629.3	2021-10-20 14:17	593.3
62			2021-10-20 12:18	623.7	2021-10-20 14:18	594.6
63			2021-10-20 12:19	619.6	2021-10-20 14:19	595.7
64			2021-10-20 12:20	616.9	2021-10-20 14:20	595.8
65			2021-10-20 12:21	613.3	2021-10-20 14:21	595.6
66			2021-10-20 12:22	612.7	2021-10-20 14:22	596.7
67			2021-10-20 12:23	612.3	2021-10-20 14:23	596.8
68			2021-10-20 12:24	610.7	2021-10-20 14:24	596.5
69			2021-10-20 12:25	608.5	2021-10-20 14:25	594.5
70			2021-10-20 12:26	605.6	2021-10-20 14:26	594.4
71			2021-10-20 12:27	599.5	2021-10-20 14:27	592.4
72			2021-10-20 12:28	596.3	2021-10-20 14:28	590.0
73			2021-10-20 12:29	594.8	2021-10-20 14:29	587.5
74			2021-10-20 12:30	594.6	2021-10-20 14:30	586.7
75			2021-10-20 12:31	594.1	2021-10-20 14:31	588.0
76			2021-10-20 12:32	590.7	2021-10-20 14:32	588.8
77			2021-10-20 12:33	588.5	2021-10-20 14:33	588.7
78			2021-10-20 12:34	584.3	2021-10-20 14:34	587.9
79			2021-10-20 12:35	580.8	2021-10-20 14:35	586.4
80			2021-10-20 12:36	578.3	2021-10-20 14:36	580.7
81			2021-10-20 12:37	568.5	2021-10-20 14:37	574.2
82			2021-10-20 12:38	553.8	2021-10-20 14:38	568.7
83			2021-10-20 12:39	545.2	2021-10-20 14:39	565.3
84			2021-10-20 12:40	535.2	2021-10-20 14:40	563.5
85			2021-10-20 12:41	528.0	2021-10-20 14:41	561.0
86			2021-10-20 12:42	522.2	2021-10-20 14:42	558.2
87			2021-10-20 12:43	514.9	2021-10-20 14:43	556.0
88			2021-10-20 12:44	508.5	2021-10-20 14:44	557.0
89			2021-10-20 12:45	503.2	2021-10-20 14:45	557.9
90			2021-10-20 12:46	499.7	2021-10-20 14:46	550.9
91			2021-10-20 12:47	495.1	2021-10-20 14:47	547.1
92			2021-10-20 12:48	490.2	2021-10-20 14:48	539.4
93			2021-10-20 12:49	485.6	2021-10-20 14:49	534.9
94			2021-10-20 12:50	477.1	2021-10-20 14:50	527.5
95			2021-10-20 12:51	467.9	2021-10-20 14:51	518.2
96			2021-10-20 12:52	458.4	2021-10-20 14:52	510.1
97			2021-10-20 12:53	451.0	2021-10-20 14:53	498.7
98			2021-10-20 12:54	446.2	2021-10-20 14:54	492.3
99			2021-10-20 12:55	441.8	2021-10-20 14:55	487.5
100			2021-10-20 12:56	437.0	2021-10-20 14:56	481.7
101			2021-10-20 12:57	432.7	2021-10-20 14:57	477.2
102			2021-10-20 12:58	428.9	2021-10-20 14:58	472.7
103			2021-10-20 12:59	425.5	2021-10-20 14:59	469.4
104			2021-10-20 13:00	422.0	2021-10-20 15:00	466.0
105			2021-10-20 13:01	418.6	2021-10-20 15:01	463.5
106			2021-10-20 13:02	416.0	2021-10-20 15:02	460.5
107			2021-10-20 13:03	412.6	2021-10-20 15:03	456.3
108			2021-10-20 13:04	409.9	2021-10-20 15:04	452.0
109			2021-10-20 13:05	407.1	2021-10-20 15:05	448.8
110			2021-10-20 13:06	404.5	2021-10-20 15:06	445.6

111			2021-10-20 13:07	401.9	2021-10-20 15:07	442.9
112			2021-10-20 13:08	400.0	2021-10-20 15:08	439.9
113			2021-10-20 13:09	397.1	2021-10-20 15:09	436.7
114			2021-10-20 13:10	394.5	2021-10-20 15:10	433.2
115			2021-10-20 13:11	392.3	2021-10-20 15:11	431.1
116			2021-10-20 13:12	390.5	2021-10-20 15:12	428.9
117			2021-10-20 13:13	388.9	2021-10-20 15:13	427.2
118			2021-10-20 13:14	388.1	2021-10-20 15:14	424.3
119			2021-10-20 13:15	384.7	2021-10-20 15:15	421.9
120			2021-10-20 13:16	361.6	2021-10-20 15:16	421.0
121					2021-10-20 15:17	417.6
122					2021-10-20 15:18	415.3
123					2021-10-20 15:19	413.4
124					2021-10-20 15:20	410.5
125					2021-10-20 15:21	409.4
126					2021-10-20 15:22	407.3
127					2021-10-20 15:23	404.7
128					2021-10-20 15:24	403.1
129					2021-10-20 15:25	401.9
130					2021-10-20 15:26	400.4
131					2021-10-20 15:27	399.0
132					2021-10-20 15:28	396.6
133					2021-10-20 15:29	394.6
134					2021-10-20 15:30	393.8
135					2021-10-20 15:31	393.2
136					2021-10-20 15:32	390.8
137					2021-10-20 15:33	389.5
138					2021-10-20 15:34	388.5
139					2021-10-20 15:35	386.5
140					2021-10-20 15:36	385.1
141					2021-10-20 15:37	383.6
142					2021-10-20 15:38	381.7
143					2021-10-20 15:39	381.2
144					2021-10-20 15:40	380.1
145					2021-10-20 15:41	378.0
146					2021-10-20 15:42	376.8
147					2021-10-20 15:43	376.7
148					2021-10-20 15:44	374.7
149					2021-10-20 15:45	374.2
150					2021-10-20 15:46	373.3
151					2021-10-20 15:47	372.5
152					2021-10-20 15:48	371.2
153					2021-10-20 15:49	370.2
154					2021-10-20 15:50	369.5
155					2021-10-20 15:51	369.0
156					2021-10-20 15:52	368.6
157					2021-10-20 15:53	368.2
158					2021-10-20 15:54	366.5
159					2021-10-20 15:55	365.0
160					2021-10-20 15:56	365.0
161					2021-10-20 15:57	364.8
162					2021-10-20 15:58	364.5
163					2021-10-20 15:59	363.8
164					2021-10-20 16:00	363.1
165					2021-10-20 16:01	362.6
166					2021-10-20 16:02	362.2
167					2021-10-20 16:03	361.4
168					2021-10-20 16:04	360.4
169					2021-10-20 16:05	360.3
170					2021-10-20 16:06	357.7
171					2021-10-20 16:07	355.3

172					2021-10-20 16:08	353.4
173					2021-10-20 16:09	352.1
174					2021-10-20 16:10	351.6
175					2021-10-20 16:11	350.6
176					2021-10-20 16:12	349.0
177					2021-10-20 16:13	347.9
178					2021-10-20 16:14	347.3
179					2021-10-20 16:15	346.1
180					2021-10-20 16:16	345.1
181					2021-10-20 16:17	343.9
182					2021-10-20 16:18	343.4
183					2021-10-20 16:19	342.3
184					2021-10-20 16:20	341.3
185					2021-10-20 16:21	340.7
186					2021-10-20 16:22	339.3
187					2021-10-20 16:23	338.8
188					2021-10-20 16:24	337.6
189					2021-10-20 16:25	336.3
190					2021-10-20 16:26	336.5
191					2021-10-20 16:27	335.8
192					2021-10-20 16:28	335.1
193					2021-10-20 16:29	334.3
194					2021-10-20 16:30	333.5
195					2021-10-20 16:31	332.5
196					2021-10-20 16:32	331.9
197					2021-10-20 16:33	331.2
198					2021-10-20 16:34	330.0
199					2021-10-20 16:35	329.7
200					2021-10-20 16:36	328.5
201					2021-10-20 16:37	327.8
202					2021-10-20 16:38	327.6
203					2021-10-20 16:39	326.5
204					2021-10-20 16:40	325.7
205					2021-10-20 16:41	325.4
206					2021-10-20 16:42	324.4
207					2021-10-20 16:43	324.0
208					2021-10-20 16:44	323.9
209					2021-10-20 16:45	323.1
210					2021-10-20 16:46	322.3
211					2021-10-20 16:47	321.1
212					2021-10-20 16:48	319.9
213					2021-10-20 16:49	318.5
214					2021-10-20 16:50	317.6
215					2021-10-20 16:51	317.2
216					2021-10-20 16:52	316.3
217					2021-10-20 16:53	315.3
218					2021-10-20 16:54	314.9
219					2021-10-20 16:55	314.0
220					2021-10-20 16:56	313.9
221					2021-10-20 16:57	313.3
222					2021-10-20 16:58	312.4
223					2021-10-20 16:59	311.9
224					2021-10-20 17:00	310.9
225					2021-10-20 17:01	311.2
226					2021-10-20 17:02	309.9
227					2021-10-20 17:03	309.4
228					2021-10-20 17:04	308.5
229					2021-10-20 17:05	307.9
230					2021-10-20 17:06	308.0
231					2021-10-20 17:07	307.1
232					2021-10-20 17:08	305.9

233					2021-10-20 17:09	305.6
234					2021-10-20 17:10	305.4
235					2021-10-20 17:11	304.9
236					2021-10-20 17:12	304.3
237					2021-10-20 17:13	303.9
238					2021-10-20 17:14	303.1
239					2021-10-20 17:15	302.6
240					2021-10-20 17:16	301.8
241					2021-10-20 17:17	301.3
242					2021-10-20 17:18	300.1
243					2021-10-20 17:19	299.6
244					2021-10-20 17:20	299.6
245					2021-10-20 17:21	299.0
246					2021-10-20 17:22	298.3
247					2021-10-20 17:23	297.5
248					2021-10-20 17:24	297.2
249					2021-10-20 17:25	296.2
250					2021-10-20 17:26	295.6
251					2021-10-20 17:27	294.9
252					2021-10-20 17:28	294.5
253					2021-10-20 17:29	294.0
254					2021-10-20 17:30	293.2
255					2021-10-20 17:31	292.7
256					2021-10-20 17:32	292.4
257					2021-10-20 17:33	291.5
258					2021-10-20 17:34	291.3
259					2021-10-20 17:35	290.8
260					2021-10-20 17:36	290.3
261					2021-10-20 17:37	289.8
262					2021-10-20 17:38	289.2
263					2021-10-20 17:39	287.9
264					2021-10-20 17:40	288.1
265					2021-10-20 17:41	287.2
266					2021-10-20 17:42	287.1
267					2021-10-20 17:43	286.3
268					2021-10-20 17:44	285.9
269					2021-10-20 17:45	284.9
270					2021-10-20 17:46	284.8
271					2021-10-20 17:47	284.2
272					2021-10-20 17:48	283.8
273					2021-10-20 17:49	282.8
274					2021-10-20 17:50	282.7
275					2021-10-20 17:51	282.0
276					2021-10-20 17:52	281.2
277					2021-10-20 17:53	280.3
278					2021-10-20 17:54	280.0
279					2021-10-20 17:55	279.3
280					2021-10-20 17:56	279.0
281					2021-10-20 17:57	278.4
282					2021-10-20 17:58	278.0
283					2021-10-20 17:59	276.9
284					2021-10-20 18:00	275.8
285					2021-10-20 18:01	275.2
286					2021-10-20 18:02	274.8
287					2021-10-20 18:03	274.3
288					2021-10-20 18:04	273.9
289					2021-10-20 18:05	272.9
290					2021-10-20 18:06	272.4
291					2021-10-20 18:07	271.7
292					2021-10-20 18:08	271.1
293					2021-10-20 18:09	270.4

294					2021-10-20 18:10	269.4
295					2021-10-20 18:11	269.1
296					2021-10-20 18:12	268.1
297					2021-10-20 18:13	268.3
298					2021-10-20 18:14	267.5
299					2021-10-20 18:15	267.2
300					2021-10-20 18:16	265.8
301					2021-10-20 18:17	265.8
302					2021-10-20 18:18	265.6
303					2021-10-20 18:19	264.6
304					2021-10-20 18:20	264.1
305					2021-10-20 18:21	263.1
306					2021-10-20 18:22	262.8
307					2021-10-20 18:23	261.8
308					2021-10-20 18:24	261.0
309					2021-10-20 18:25	260.7
310					2021-10-20 18:26	259.7
311					2021-10-20 18:27	259.3
312					2021-10-20 18:28	258.6
313					2021-10-20 18:29	257.9
314					2021-10-20 18:30	257.0
315					2021-10-20 18:31	256.1
316					2021-10-20 18:32	255.3
317					2021-10-20 18:33	254.7
318					2021-10-20 18:34	253.9
319					2021-10-20 18:35	252.7
320					2021-10-20 18:36	252.2
321					2021-10-20 18:37	251.3
322					2021-10-20 18:38	250.7
323					2021-10-20 18:39	250.0
324					2021-10-20 18:40	249.1
325					2021-10-20 18:41	248.3
326					2021-10-20 18:42	247.6
327					2021-10-20 18:43	247.4
328					2021-10-20 18:44	246.0
329					2021-10-20 18:45	244.9
330					2021-10-20 18:46	244.5
331					2021-10-20 18:47	243.0
332					2021-10-20 18:48	242.0
333					2021-10-20 18:49	240.9
334					2021-10-20 18:50	240.7
335					2021-10-20 18:51	239.5
336					2021-10-20 18:52	238.2
337					2021-10-20 18:53	237.9
338					2021-10-20 18:54	237.1
339					2021-10-20 18:55	236.1
340					2021-10-20 18:56	235.1
341					2021-10-20 18:57	233.8
342					2021-10-20 18:58	233.6
343					2021-10-20 18:59	232.7
344					2021-10-20 19:00	231.8
345					2021-10-20 19:01	230.8
346					2021-10-20 19:02	229.7
347					2021-10-20 19:03	228.7
348					2021-10-20 19:04	227.8
349					2021-10-20 19:05	227.3
350					2021-10-20 19:06	226.5
351					2021-10-20 19:07	225.7
352					2021-10-20 19:08	224.7
353					2021-10-20 19:09	224.0
354					2021-10-20 19:10	223.2

355					2021-10-20 19:11	222.6
356					2021-10-20 19:12	221.7
357					2021-10-20 19:13	220.8
358					2021-10-20 19:14	220.0
359					2021-10-20 19:15	219.6
360					2021-10-20 19:16	218.8
361					2021-10-20 19:17	218.0
362					2021-10-20 19:18	216.8
363					2021-10-20 19:19	216.0
364					2021-10-20 19:20	215.4
365					2021-10-20 19:21	214.7
366					2021-10-20 19:22	214.0
367					2021-10-20 19:23	213.2
368					2021-10-20 19:24	212.4
369					2021-10-20 19:25	211.5
370					2021-10-20 19:26	210.7
371					2021-10-20 19:27	210.0
372					2021-10-20 19:28	209.1
373					2021-10-20 19:29	208.5
374					2021-10-20 19:30	207.5
375					2021-10-20 19:31	207.0
376					2021-10-20 19:32	205.9
377					2021-10-20 19:33	205.6
378					2021-10-20 19:34	204.7
379					2021-10-20 19:35	204.2

2.5R Series Pre-burn Data 2021-10-22 Total time (h) 9.25

Load time	Load type	Fuel added	Moisture		Time	Flue Temp
(-)	(-)	(lbs)	(DB %)		(min)	(°F)
2021-10-22 09:34	Kindling & SUF	8.56	14.7	**Pre-Charge (min)**	55	388.7
2021-10-22 10:30	High fire	18.78	19.7	**Conditioning (min)**	84	621.2
2021-10-22 11:54	Medium fire	22.90	19.5	**Load (min)**	416	334.0

	Average Tflue (°F)	**388.7**		**621.2**		**334.0**
	Pre-Charge (min)	**55**	**Conditioning (min)**	**84**	**Load (min)**	**416**
Index	**Date & Time**	**Flue (F)**	**Date & Time**	**Flue (F)**	**Date & Time**	**Flue (F)**
0	2021-10-22 09:34	138.5	2021-10-22 10:30	493.6	2021-10-22 11:54	437.4
1	2021-10-22 09:35	169.6	2021-10-22 10:31	396.8	2021-10-22 11:55	388.8
2	2021-10-22 09:36	168.0	2021-10-22 10:32	432.3	2021-10-22 11:56	360.9
3	2021-10-22 09:37	173.2	2021-10-22 10:33	481.3	2021-10-22 11:57	407.1
4	2021-10-22 09:38	192.6	2021-10-22 10:34	520.5	2021-10-22 11:58	503.9
5	2021-10-22 09:39	219.4	2021-10-22 10:35	561.8	2021-10-22 11:59	519.0
6	2021-10-22 09:40	233.6	2021-10-22 10:36	598.6	2021-10-22 12:00	794.2
7	2021-10-22 09:41	248.5	2021-10-22 10:37	612.0	2021-10-22 12:01	680.4
8	2021-10-22 09:42	249.1	2021-10-22 10:38	620.8	2021-10-22 12:02	676.8
9	2021-10-22 09:43	245.9	2021-10-22 10:39	637.3	2021-10-22 12:03	687.2
10	2021-10-22 09:44	257.3	2021-10-22 10:40	636.5	2021-10-22 12:04	656.5
11	2021-10-22 09:45	284.8	2021-10-22 10:41	638.6	2021-10-22 12:05	635.2
12	2021-10-22 09:46	293.5	2021-10-22 10:42	667.1	2021-10-22 12:06	632.5
13	2021-10-22 09:47	310.3	2021-10-22 10:43	687.1	2021-10-22 12:07	604.7
14	2021-10-22 09:48	327.7	2021-10-22 10:44	697.5	2021-10-22 12:08	577.7
15	2021-10-22 09:49	331.7	2021-10-22 10:45	708.3	2021-10-22 12:09	555.0
16	2021-10-22 09:50	342.8	2021-10-22 10:46	711.0	2021-10-22 12:10	541.1
17	2021-10-22 09:51	364.1	2021-10-22 10:47	715.6	2021-10-22 12:11	530.3
18	2021-10-22 09:52	382.9	2021-10-22 10:48	717.6	2021-10-22 12:12	522.8
19	2021-10-22 09:53	394.1	2021-10-22 10:49	719.4	2021-10-22 12:13	516.9
20	2021-10-22 09:54	408.7	2021-10-22 10:50	722.1	2021-10-22 12:14	514.8
21	2021-10-22 09:55	412.7	2021-10-22 10:51	722.2	2021-10-22 12:15	511.9
22	2021-10-22 09:56	423.4	2021-10-22 10:52	722.3	2021-10-22 12:16	510.1
23	2021-10-22 09:57	437.1	2021-10-22 10:53	720.2	2021-10-22 12:17	511.4
24	2021-10-22 09:58	446.5	2021-10-22 10:54	720.9	2021-10-22 12:18	509.8
25	2021-10-22 09:59	452.8	2021-10-22 10:55	721.3	2021-10-22 12:19	507.8
26	2021-10-22 10:00	449.4	2021-10-22 10:56	721.3	2021-10-22 12:20	510.4
27	2021-10-22 10:01	446.6	2021-10-22 10:57	720.5	2021-10-22 12:21	511.0
28	2021-10-22 10:02	439.2	2021-10-22 10:58	722.5	2021-10-22 12:22	508.1
29	2021-10-22 10:03	441.3	2021-10-22 10:59	726.7	2021-10-22 12:23	509.5
30	2021-10-22 10:04	455.4	2021-10-22 11:00	727.0	2021-10-22 12:24	507.8
31	2021-10-22 10:05	460.2	2021-10-22 11:01	728.2	2021-10-22 12:25	509.0
32	2021-10-22 10:06	465.4	2021-10-22 11:02	727.8	2021-10-22 12:26	507.5
33	2021-10-22 10:07	464.1	2021-10-22 11:03	728.2	2021-10-22 12:27	506.7
34	2021-10-22 10:08	469.0	2021-10-22 11:04	727.0	2021-10-22 12:28	504.2
35	2021-10-22 10:09	461.8	2021-10-22 11:05	726.2	2021-10-22 12:29	502.5
36	2021-10-22 10:10	456.9	2021-10-22 11:06	727.1	2021-10-22 12:30	501.5
37	2021-10-22 10:11	450.1	2021-10-22 11:07	724.7	2021-10-22 12:31	502.5
38	2021-10-22 10:12	444.4	2021-10-22 11:08	725.4	2021-10-22 12:32	501.3
39	2021-10-22 10:13	442.1	2021-10-22 11:09	722.1	2021-10-22 12:33	502.2
40	2021-10-22 10:14	442.3	2021-10-22 11:10	721.8	2021-10-22 12:34	501.5
41	2021-10-22 10:15	455.1	2021-10-22 11:11	717.3	2021-10-22 12:35	501.4
42	2021-10-22 10:16	474.7	2021-10-22 11:12	716.0	2021-10-22 12:36	499.9
43	2021-10-22 10:17	482.8	2021-10-22 11:13	712.5	2021-10-22 12:37	500.2
44	2021-10-22 10:18	471.5	2021-10-22 11:14	711.0	2021-10-22 12:38	500.1
45	2021-10-22 10:19	462.4	2021-10-22 11:15	706.1	2021-10-22 12:39	503.1
46	2021-10-22 10:20	457.4	2021-10-22 11:16	700.0	2021-10-22 12:40	503.5
47	2021-10-22 10:21	450.7	2021-10-22 11:17	693.3	2021-10-22 12:41	503.5
48	2021-10-22 10:22	446.2	2021-10-22 11:18	685.2	2021-10-22 12:42	506.7
49	2021-10-22 10:23	448.9	2021-10-22 11:19	677.9	2021-10-22 12:43	511.8

50	2021-10-22 10:24	452.3	2021-10-22 11:20	669.9	2021-10-22 12:44	512.6
51	2021-10-22 10:25	457.6	2021-10-22 11:21	661.5	2021-10-22 12:45	514.1
52	2021-10-22 10:26	464.8	2021-10-22 11:22	652.9	2021-10-22 12:46	514.1
53	2021-10-22 10:27	467.2	2021-10-22 11:23	645.0	2021-10-22 12:47	512.9
54	2021-10-22 10:28	568.2	2021-10-22 11:24	637.2	2021-10-22 12:48	513.0
55	2021-10-22 10:29	509.9	2021-10-22 11:25	627.1	2021-10-22 12:49	512.3
56			2021-10-22 11:26	621.1	2021-10-22 12:50	512.9
57			2021-10-22 11:27	614.0	2021-10-22 12:51	511.8
58			2021-10-22 11:28	607.4	2021-10-22 12:52	512.9
59			2021-10-22 11:29	595.0	2021-10-22 12:53	514.4
60			2021-10-22 11:30	582.6	2021-10-22 12:54	514.9
61			2021-10-22 11:31	571.7	2021-10-22 12:55	514.1
62			2021-10-22 11:32	567.3	2021-10-22 12:56	513.1
63			2021-10-22 11:33	563.6	2021-10-22 12:57	509.3
64			2021-10-22 11:34	560.8	2021-10-22 12:58	505.7
65			2021-10-22 11:35	557.4	2021-10-22 12:59	506.5
66			2021-10-22 11:36	553.9	2021-10-22 13:00	506.5
67			2021-10-22 11:37	550.6	2021-10-22 13:01	507.9
68			2021-10-22 11:38	536.1	2021-10-22 13:02	507.7
69			2021-10-22 11:39	522.7	2021-10-22 13:03	509.9
70			2021-10-22 11:40	512.3	2021-10-22 13:04	506.5
71			2021-10-22 11:41	505.5	2021-10-22 13:05	507.4
72			2021-10-22 11:42	500.9	2021-10-22 13:06	506.5
73			2021-10-22 11:43	494.4	2021-10-22 13:07	507.5
74			2021-10-22 11:44	488.6	2021-10-22 13:08	506.7
75			2021-10-22 11:45	482.8	2021-10-22 13:09	505.6
76			2021-10-22 11:46	478.2	2021-10-22 13:10	507.2
77			2021-10-22 11:47	474.8	2021-10-22 13:11	506.3
78			2021-10-22 11:48	470.0	2021-10-22 13:12	507.6
79			2021-10-22 11:49	466.2	2021-10-22 13:13	508.7
80			2021-10-22 11:50	461.0	2021-10-22 13:14	509.7
81			2021-10-22 11:51	456.8	2021-10-22 13:15	512.9
82			2021-10-22 11:52	452.8	2021-10-22 13:16	511.3
83			2021-10-22 11:53	444.9	2021-10-22 13:17	512.8
84			2021-10-22 11:54	439.5	2021-10-22 13:18	514.1
85					2021-10-22 13:19	517.2
86					2021-10-22 13:20	520.3
87					2021-10-22 13:21	520.7
88					2021-10-22 13:22	524.5
89					2021-10-22 13:23	525.1
90					2021-10-22 13:24	524.6
91					2021-10-22 13:25	521.2
92					2021-10-22 13:26	517.7
93					2021-10-22 13:27	509.3
94					2021-10-22 13:28	498.6
95					2021-10-22 13:29	491.7
96					2021-10-22 13:30	483.4
97					2021-10-22 13:31	478.3
98					2021-10-22 13:32	470.9
99					2021-10-22 13:33	467.3
100					2021-10-22 13:34	462.6
101					2021-10-22 13:35	457.7
102					2021-10-22 13:36	453.8
103					2021-10-22 13:37	451.4
104					2021-10-22 13:38	447.3
105					2021-10-22 13:39	442.9
106					2021-10-22 13:40	438.3
107					2021-10-22 13:41	434.1
108					2021-10-22 13:42	430.2
109					2021-10-22 13:43	426.6
110					2021-10-22 13:44	421.6

111					2021-10-22 13:45	415.6
112					2021-10-22 13:46	408.7
113					2021-10-22 13:47	401.8
114					2021-10-22 13:48	396.5
115					2021-10-22 13:49	391.7
116					2021-10-22 13:50	387.9
117					2021-10-22 13:51	385.3
118					2021-10-22 13:52	382.9
119					2021-10-22 13:53	379.8
120					2021-10-22 13:54	377.0
121					2021-10-22 13:55	373.9
122					2021-10-22 13:56	371.2
123					2021-10-22 13:57	368.2
124					2021-10-22 13:58	365.9
125					2021-10-22 13:59	363.7
126					2021-10-22 14:00	361.6
127					2021-10-22 14:01	359.2
128					2021-10-22 14:02	356.5
129					2021-10-22 14:03	354.5
130					2021-10-22 14:04	352.3
131					2021-10-22 14:05	349.6
132					2021-10-22 14:06	347.5
133					2021-10-22 14:07	345.7
134					2021-10-22 14:08	343.2
135					2021-10-22 14:09	341.2
136					2021-10-22 14:10	339.4
137					2021-10-22 14:11	337.8
138					2021-10-22 14:12	336.3
139					2021-10-22 14:13	334.3
140					2021-10-22 14:14	333.5
141					2021-10-22 14:15	331.4
142					2021-10-22 14:16	329.6
143					2021-10-22 14:17	328.0
144					2021-10-22 14:18	326.6
145					2021-10-22 14:19	324.1
146					2021-10-22 14:20	323.1
147					2021-10-22 14:21	322.5
148					2021-10-22 14:22	321.7
149					2021-10-22 14:23	320.5
150					2021-10-22 14:24	318.5
151					2021-10-22 14:25	317.3
152					2021-10-22 14:26	316.0
153					2021-10-22 14:27	315.4
154					2021-10-22 14:28	313.8
155					2021-10-22 14:29	313.0
156					2021-10-22 14:30	311.9
157					2021-10-22 14:31	311.4
158					2021-10-22 14:32	309.9
159					2021-10-22 14:33	309.3
160					2021-10-22 14:34	309.1
161					2021-10-22 14:35	308.1
162					2021-10-22 14:36	307.4
163					2021-10-22 14:37	306.9
164					2021-10-22 14:38	305.5
165					2021-10-22 14:39	304.7
166					2021-10-22 14:40	304.2
167					2021-10-22 14:41	304.5
168					2021-10-22 14:42	304.1
169					2021-10-22 14:43	302.3
170					2021-10-22 14:44	301.4
171					2021-10-22 14:45	301.4

172					2021-10-22 14:46	301.2
173					2021-10-22 14:47	301.2
174					2021-10-22 14:48	300.4
175					2021-10-22 14:49	300.2
176					2021-10-22 14:50	299.7
177					2021-10-22 14:51	300.4
178					2021-10-22 14:52	300.0
179					2021-10-22 14:53	298.9
180					2021-10-22 14:54	299.8
181					2021-10-22 14:55	298.3
182					2021-10-22 14:56	297.4
183					2021-10-22 14:57	297.4
184					2021-10-22 14:58	295.7
185					2021-10-22 14:59	294.8
186					2021-10-22 15:00	294.3
187					2021-10-22 15:01	293.7
188					2021-10-22 15:02	293.1
189					2021-10-22 15:03	292.3
190					2021-10-22 15:04	291.2
191					2021-10-22 15:05	290.6
192					2021-10-22 15:06	289.9
193					2021-10-22 15:07	289.3
194					2021-10-22 15:08	288.7
195					2021-10-22 15:09	288.3
196					2021-10-22 15:10	287.5
197					2021-10-22 15:11	287.1
198					2021-10-22 15:12	286.8
199					2021-10-22 15:13	286.5
200					2021-10-22 15:14	285.1
201					2021-10-22 15:15	285.0
202					2021-10-22 15:16	284.3
203					2021-10-22 15:17	283.7
204					2021-10-22 15:18	283.5
205					2021-10-22 15:19	283.5
206					2021-10-22 15:20	282.3
207					2021-10-22 15:21	282.2
208					2021-10-22 15:22	281.5
209					2021-10-22 15:23	281.5
210					2021-10-22 15:24	281.2
211					2021-10-22 15:25	281.0
212					2021-10-22 15:26	280.9
213					2021-10-22 15:27	279.9
214					2021-10-22 15:28	279.8
215					2021-10-22 15:29	279.8
216					2021-10-22 15:30	279.5
217					2021-10-22 15:31	279.2
218					2021-10-22 15:32	278.4
219					2021-10-22 15:33	278.3
220					2021-10-22 15:34	278.4
221					2021-10-22 15:35	277.6
222					2021-10-22 15:36	277.8
223					2021-10-22 15:37	276.9
224					2021-10-22 15:38	276.6
225					2021-10-22 15:39	276.2
226					2021-10-22 15:40	275.0
227					2021-10-22 15:41	275.1
228					2021-10-22 15:42	274.4
229					2021-10-22 15:43	274.8
230					2021-10-22 15:44	274.5
231					2021-10-22 15:45	274.4
232					2021-10-22 15:46	274.1

233					2021-10-22 15:47	273.8
234					2021-10-22 15:48	274.3
235					2021-10-22 15:49	274.1
236					2021-10-22 15:50	273.1
237					2021-10-22 15:51	272.4
238					2021-10-22 15:52	271.8
239					2021-10-22 15:53	272.0
240					2021-10-22 15:54	271.9
241					2021-10-22 15:55	271.9
242					2021-10-22 15:56	271.4
243					2021-10-22 15:57	270.9
244					2021-10-22 15:58	270.5
245					2021-10-22 15:59	270.0
246					2021-10-22 16:00	269.6
247					2021-10-22 16:01	270.4
248					2021-10-22 16:02	270.1
249					2021-10-22 16:03	269.5
250					2021-10-22 16:04	269.7
251					2021-10-22 16:05	269.1
252					2021-10-22 16:06	269.1
253					2021-10-22 16:07	268.7
254					2021-10-22 16:08	268.5
255					2021-10-22 16:09	268.4
256					2021-10-22 16:10	268.7
257					2021-10-22 16:11	267.8
258					2021-10-22 16:12	267.7
259					2021-10-22 16:13	266.7
260					2021-10-22 16:14	266.2
261					2021-10-22 16:15	266.0
262					2021-10-22 16:16	265.7
263					2021-10-22 16:17	265.9
264					2021-10-22 16:18	265.6
265					2021-10-22 16:19	264.7
266					2021-10-22 16:20	264.4
267					2021-10-22 16:21	265.0
268					2021-10-22 16:22	264.2
269					2021-10-22 16:23	263.5
270					2021-10-22 16:24	263.6
271					2021-10-22 16:25	262.9
272					2021-10-22 16:26	262.1
273					2021-10-22 16:27	262.3
274					2021-10-22 16:28	261.7
275					2021-10-22 16:29	261.5
276					2021-10-22 16:30	261.9
277					2021-10-22 16:31	261.3
278					2021-10-22 16:32	261.2
279					2021-10-22 16:33	260.5
280					2021-10-22 16:34	260.1
281					2021-10-22 16:35	260.3
282					2021-10-22 16:36	258.7
283					2021-10-22 16:37	259.3
284					2021-10-22 16:38	258.7
285					2021-10-22 16:39	258.5
286					2021-10-22 16:40	258.4
287					2021-10-22 16:41	257.4
288					2021-10-22 16:42	256.6
289					2021-10-22 16:43	257.4
290					2021-10-22 16:44	256.7
291					2021-10-22 16:45	256.0
292					2021-10-22 16:46	255.6
293					2021-10-22 16:47	255.8

294					2021-10-22 16:48	255.5
295					2021-10-22 16:49	255.0
296					2021-10-22 16:50	253.8
297					2021-10-22 16:51	253.8
298					2021-10-22 16:52	253.7
299					2021-10-22 16:53	253.5
300					2021-10-22 16:54	253.0
301					2021-10-22 16:55	251.6
302					2021-10-22 16:56	251.5
303					2021-10-22 16:57	251.2
304					2021-10-22 16:58	251.1
305					2021-10-22 16:59	250.4
306					2021-10-22 17:00	249.6
307					2021-10-22 17:01	249.4
308					2021-10-22 17:02	249.2
309					2021-10-22 17:03	248.4
310					2021-10-22 17:04	248.6
311					2021-10-22 17:05	247.4
312					2021-10-22 17:06	247.4
313					2021-10-22 17:07	246.5
314					2021-10-22 17:08	246.3
315					2021-10-22 17:09	246.3
316					2021-10-22 17:10	246.2
317					2021-10-22 17:11	245.5
318					2021-10-22 17:12	244.6
319					2021-10-22 17:13	244.4
320					2021-10-22 17:14	244.0
321					2021-10-22 17:15	243.7
322					2021-10-22 17:16	243.6
323					2021-10-22 17:17	243.0
324					2021-10-22 17:18	242.4
325					2021-10-22 17:19	242.7
326					2021-10-22 17:20	242.3
327					2021-10-22 17:21	241.8
328					2021-10-22 17:22	241.5
329					2021-10-22 17:23	240.9
330					2021-10-22 17:24	240.6
331					2021-10-22 17:25	240.4
332					2021-10-22 17:26	240.0
333					2021-10-22 17:27	239.8
334					2021-10-22 17:28	239.3
335					2021-10-22 17:29	238.7
336					2021-10-22 17:30	238.4
337					2021-10-22 17:31	238.0
338					2021-10-22 17:32	237.9
339					2021-10-22 17:33	237.4
340					2021-10-22 17:34	237.1
341					2021-10-22 17:35	236.7
342					2021-10-22 17:36	235.6
343					2021-10-22 17:37	235.2
344					2021-10-22 17:38	235.0
345					2021-10-22 17:39	234.7
346					2021-10-22 17:40	234.3
347					2021-10-22 17:41	233.6
348					2021-10-22 17:42	233.0
349					2021-10-22 17:43	233.1
350					2021-10-22 17:44	232.3
351					2021-10-22 17:45	231.6
352					2021-10-22 17:46	231.5
353					2021-10-22 17:47	231.2
354					2021-10-22 17:48	230.5

355					2021-10-22 17:49	230.6
356					2021-10-22 17:50	229.8
357					2021-10-22 17:51	229.3
358					2021-10-22 17:52	229.3
359					2021-10-22 17:53	228.4
360					2021-10-22 17:54	227.8
361					2021-10-22 17:55	227.7
362					2021-10-22 17:56	227.2
363					2021-10-22 17:57	226.9
364					2021-10-22 17:58	227.0
365					2021-10-22 17:59	226.1
366					2021-10-22 18:00	225.4
367					2021-10-22 18:01	225.2
368					2021-10-22 18:02	224.9
369					2021-10-22 18:03	224.6
370					2021-10-22 18:04	224.1
371					2021-10-22 18:05	224.0
372					2021-10-22 18:06	223.2
373					2021-10-22 18:07	223.0
374					2021-10-22 18:08	223.2
375					2021-10-22 18:09	222.6
376					2021-10-22 18:10	221.6
377					2021-10-22 18:11	220.7
378					2021-10-22 18:12	220.7
379					2021-10-22 18:13	220.2
380					2021-10-22 18:14	219.6
381					2021-10-22 18:15	219.0
382					2021-10-22 18:16	218.5
383					2021-10-22 18:17	218.2
384					2021-10-22 18:18	217.9
385					2021-10-22 18:19	217.2
386					2021-10-22 18:20	216.3
387					2021-10-22 18:21	216.4
388					2021-10-22 18:22	215.6
389					2021-10-22 18:23	215.6
390					2021-10-22 18:24	215.3
391					2021-10-22 18:25	214.7
392					2021-10-22 18:26	214.4
393					2021-10-22 18:27	213.6
394					2021-10-22 18:28	212.9
395					2021-10-22 18:29	212.3
396					2021-10-22 18:30	212.0
397					2021-10-22 18:31	211.7
398					2021-10-22 18:32	210.7
399					2021-10-22 18:33	210.6
400					2021-10-22 18:34	210.2
401					2021-10-22 18:35	209.3
402					2021-10-22 18:36	209.0
403					2021-10-22 18:37	208.6
404					2021-10-22 18:38	208.2
405					2021-10-22 18:39	207.8
406					2021-10-22 18:40	207.3
407					2021-10-22 18:41	206.9
408					2021-10-22 18:42	206.0
409					2021-10-22 18:43	206.0
410					2021-10-22 18:44	205.2
411					2021-10-22 18:45	205.8
412					2021-10-22 18:46	205.1
413					2021-10-22 18:47	204.6
414					2021-10-22 18:48	204.1
415					2021-10-22 18:49	204.0

416					2021-10-22 18:50	203.6

2.5R Series Pre-burn Data 2021-10-29 Total time (h) 9.82

Load time	Load type	Fuel added	Moisture		Time	Flue Temp
(-)	(-)	(lbs)	(DB %)		(min)	(°F)
2021-10-29 10:06	Kindling & SUF	9.40	14.6	**Pre-Charge (min)**	45	465.4
2021-10-29 10:52	High fire	19.35	19.4	**Conditioning (min)**	94	595.5
2021-10-29 12:41	Medium fire	23.95	19.7	**Load (min)**	450	334.5

	Average Tflue (°F)	**465.4**		**595.5**		**334.5**
	Pre-Charge (min)	**45**	**Conditioning (min)**	**94**	**Load (min)**	**450**
Index	**Date & Time**	**Flue (F)**	**Date & Time**	**Flue (F)**	**Date & Time**	**Flue (F)**
0	2021-10-29 10:06	76.5	2021-10-29 10:52	500.6	2021-10-29 12:41	408.6
1	2021-10-29 10:07	118.8	2021-10-29 10:53	590.3	2021-10-29 12:42	364.0
2	2021-10-29 10:08	150.3	2021-10-29 10:54	570.0	2021-10-29 12:43	401.3
3	2021-10-29 10:09	194.8	2021-10-29 10:55	575.7	2021-10-29 12:44	624.3
4	2021-10-29 10:10	275.8	2021-10-29 10:56	579.9	2021-10-29 12:45	687.7
5	2021-10-29 10:11	368.3	2021-10-29 10:57	585.2	2021-10-29 12:46	651.2
6	2021-10-29 10:12	414.1	2021-10-29 10:58	600.6	2021-10-29 12:47	670.1
7	2021-10-29 10:13	422.4	2021-10-29 10:59	609.5	2021-10-29 12:48	661.2
8	2021-10-29 10:14	438.5	2021-10-29 11:00	619.9	2021-10-29 12:49	645.4
9	2021-10-29 10:15	444.9	2021-10-29 11:01	627.2	2021-10-29 12:50	644.0
10	2021-10-29 10:16	456.0	2021-10-29 11:02	638.7	2021-10-29 12:51	645.6
11	2021-10-29 10:17	458.9	2021-10-29 11:03	644.2	2021-10-29 12:52	646.7
12	2021-10-29 10:18	453.7	2021-10-29 11:04	653.0	2021-10-29 12:53	635.7
13	2021-10-29 10:19	456.8	2021-10-29 11:05	664.3	2021-10-29 12:54	624.6
14	2021-10-29 10:20	471.9	2021-10-29 11:06	667.4	2021-10-29 12:55	616.6
15	2021-10-29 10:21	476.5	2021-10-29 11:07	672.2	2021-10-29 12:56	607.9
16	2021-10-29 10:22	503.6	2021-10-29 11:08	677.0	2021-10-29 12:57	600.0
17	2021-10-29 10:23	504.7	2021-10-29 11:09	682.5	2021-10-29 12:58	595.0
18	2021-10-29 10:24	501.1	2021-10-29 11:10	684.7	2021-10-29 12:59	592.4
19	2021-10-29 10:25	508.6	2021-10-29 11:11	686.5	2021-10-29 13:00	588.6
20	2021-10-29 10:26	510.9	2021-10-29 11:12	690.7	2021-10-29 13:01	583.8
21	2021-10-29 10:27	503.9	2021-10-29 11:13	694.0	2021-10-29 13:02	582.1
22	2021-10-29 10:28	510.0	2021-10-29 11:14	694.4	2021-10-29 13:03	578.4
23	2021-10-29 10:29	517.8	2021-10-29 11:15	698.0	2021-10-29 13:04	575.6
24	2021-10-29 10:30	524.6	2021-10-29 11:16	697.9	2021-10-29 13:05	574.4
25	2021-10-29 10:31	538.8	2021-10-29 11:17	699.3	2021-10-29 13:06	569.9
26	2021-10-29 10:32	541.8	2021-10-29 11:18	700.0	2021-10-29 13:07	570.1
27	2021-10-29 10:33	535.3	2021-10-29 11:19	701.7	2021-10-29 13:08	568.4
28	2021-10-29 10:34	535.2	2021-10-29 11:20	703.6	2021-10-29 13:09	567.9
29	2021-10-29 10:35	538.2	2021-10-29 11:21	706.0	2021-10-29 13:10	564.9
30	2021-10-29 10:36	543.2	2021-10-29 11:22	705.9	2021-10-29 13:11	562.4
31	2021-10-29 10:37	531.1	2021-10-29 11:23	707.7	2021-10-29 13:12	559.5
32	2021-10-29 10:38	533.2	2021-10-29 11:24	704.3	2021-10-29 13:13	557.5
33	2021-10-29 10:39	530.2	2021-10-29 11:25	706.1	2021-10-29 13:14	554.4
34	2021-10-29 10:40	521.4	2021-10-29 11:26	703.3	2021-10-29 13:15	555.1
35	2021-10-29 10:41	523.1	2021-10-29 11:27	703.7	2021-10-29 13:16	553.6
36	2021-10-29 10:42	524.7	2021-10-29 11:28	703.3	2021-10-29 13:17	553.6
37	2021-10-29 10:43	529.0	2021-10-29 11:29	701.6	2021-10-29 13:18	552.3
38	2021-10-29 10:44	531.9	2021-10-29 11:30	701.1	2021-10-29 13:19	552.2
39	2021-10-29 10:45	532.4	2021-10-29 11:31	697.2	2021-10-29 13:20	548.8
40	2021-10-29 10:46	526.0	2021-10-29 11:32	695.9	2021-10-29 13:21	547.0
41	2021-10-29 10:47	520.6	2021-10-29 11:33	698.4	2021-10-29 13:22	545.3
42	2021-10-29 10:48	517.5	2021-10-29 11:34	693.1	2021-10-29 13:23	542.3
43	2021-10-29 10:49	510.0	2021-10-29 11:35	693.0	2021-10-29 13:24	542.7
44	2021-10-29 10:50	543.6	2021-10-29 11:36	688.7	2021-10-29 13:25	541.3
45	2021-10-29 10:51	536.1	2021-10-29 11:37	684.2	2021-10-29 13:26	543.2
46			2021-10-29 11:38	679.0	2021-10-29 13:27	542.2
47			2021-10-29 11:39	669.2	2021-10-29 13:28	538.2
48			2021-10-29 11:40	656.9	2021-10-29 13:29	532.5
49			2021-10-29 11:41	647.0	2021-10-29 13:30	526.0

50			2021-10-29 11:42	634.1	2021-10-29 13:31	523.7
51			2021-10-29 11:43	620.3	2021-10-29 13:32	520.5
52			2021-10-29 11:44	611.6	2021-10-29 13:33	517.3
53			2021-10-29 11:45	604.3	2021-10-29 13:34	514.3
54			2021-10-29 11:46	600.5	2021-10-29 13:35	512.4
55			2021-10-29 11:47	594.4	2021-10-29 13:36	510.0
56			2021-10-29 11:48	586.0	2021-10-29 13:37	509.5
57			2021-10-29 11:49	577.7	2021-10-29 13:38	505.6
58			2021-10-29 11:50	569.4	2021-10-29 13:39	506.1
59			2021-10-29 11:51	562.6	2021-10-29 13:40	505.7
60			2021-10-29 11:52	552.7	2021-10-29 13:41	505.3
61			2021-10-29 11:53	545.9	2021-10-29 13:42	503.8
62			2021-10-29 11:54	540.2	2021-10-29 13:43	504.6
63			2021-10-29 11:55	536.7	2021-10-29 13:44	502.6
64			2021-10-29 11:56	532.2	2021-10-29 13:45	502.1
65			2021-10-29 11:57	528.3	2021-10-29 13:46	502.6
66			2021-10-29 11:58	527.8	2021-10-29 13:47	501.4
67			2021-10-29 11:59	523.6	2021-10-29 13:48	502.3
68			2021-10-29 12:00	520.6	2021-10-29 13:49	503.6
69			2021-10-29 12:01	516.5	2021-10-29 13:50	501.8
70			2021-10-29 12:02	513.9	2021-10-29 13:51	502.1
71			2021-10-29 12:03	511.7	2021-10-29 13:52	502.9
72			2021-10-29 12:04	510.3	2021-10-29 13:53	501.7
73			2021-10-29 12:05	509.4	2021-10-29 13:54	500.1
74			2021-10-29 12:06	507.3	2021-10-29 13:55	502.1
75			2021-10-29 12:07	505.7	2021-10-29 13:56	501.4
76			2021-10-29 12:08	501.5	2021-10-29 13:57	501.3
77			2021-10-29 12:09	497.4	2021-10-29 13:58	501.2
78			2021-10-29 12:10	493.0	2021-10-29 13:59	500.0
79			2021-10-29 12:11	487.4	2021-10-29 14:00	501.9
80			2021-10-29 12:12	483.7	2021-10-29 14:01	500.4
81			2021-10-29 12:13	477.3	2021-10-29 14:02	502.8
82			2021-10-29 12:14	470.4	2021-10-29 14:03	503.0
83			2021-10-29 12:15	464.8	2021-10-29 14:04	503.4
84			2021-10-29 12:16	461.8	2021-10-29 14:05	503.4
85			2021-10-29 12:17	460.8	2021-10-29 14:06	507.4
86			2021-10-29 12:18	457.6	2021-10-29 14:07	510.2
87			2021-10-29 12:19	456.8	2021-10-29 14:08	509.7
88			2021-10-29 12:20	458.2	2021-10-29 14:09	507.4
89			2021-10-29 12:21	456.6	2021-10-29 14:10	503.7
90			2021-10-29 12:22	455.0	2021-10-29 14:11	503.5
91			2021-10-29 12:23	452.2	2021-10-29 14:12	502.2
92			2021-10-29 12:24	449.7	2021-10-29 14:13	500.5
93			2021-10-29 12:25	447.1	2021-10-29 14:14	497.7
94			2021-10-29 12:26	444.6	2021-10-29 14:15	496.2
95					2021-10-29 14:16	493.7
96					2021-10-29 14:17	493.3
97					2021-10-29 14:18	492.1
98					2021-10-29 14:19	490.8
99					2021-10-29 14:20	488.5
100					2021-10-29 14:21	485.4
101					2021-10-29 14:22	484.5
102					2021-10-29 14:23	481.3
103					2021-10-29 14:24	475.8
104					2021-10-29 14:25	471.8
105					2021-10-29 14:26	469.5
106					2021-10-29 14:27	468.1
107					2021-10-29 14:28	464.5
108					2021-10-29 14:29	458.6
109					2021-10-29 14:30	452.7
110					2021-10-29 14:31	446.1

111					2021-10-29 14:32	440.5
112					2021-10-29 14:33	435.2
113					2021-10-29 14:34	431.2
114					2021-10-29 14:35	426.5
115					2021-10-29 14:36	424.0
116					2021-10-29 14:37	421.4
117					2021-10-29 14:38	417.4
118					2021-10-29 14:39	414.1
119					2021-10-29 14:40	410.8
120					2021-10-29 14:41	407.8
121					2021-10-29 14:42	405.2
122					2021-10-29 14:43	401.6
123					2021-10-29 14:44	396.7
124					2021-10-29 14:45	395.2
125					2021-10-29 14:46	391.6
126					2021-10-29 14:47	388.5
127					2021-10-29 14:48	385.3
128					2021-10-29 14:49	382.6
129					2021-10-29 14:50	378.8
130					2021-10-29 14:51	376.2
131					2021-10-29 14:52	373.2
132					2021-10-29 14:53	371.0
133					2021-10-29 14:54	368.2
134					2021-10-29 14:55	366.6
135					2021-10-29 14:56	364.1
136					2021-10-29 14:57	362.0
137					2021-10-29 14:58	360.5
138					2021-10-29 14:59	358.9
139					2021-10-29 15:00	357.0
140					2021-10-29 15:01	354.7
141					2021-10-29 15:02	354.1
142					2021-10-29 15:03	352.4
143					2021-10-29 15:04	351.3
144					2021-10-29 15:05	349.9
145					2021-10-29 15:06	348.5
146					2021-10-29 15:07	347.4
147					2021-10-29 15:08	347.1
148					2021-10-29 15:09	346.1
149					2021-10-29 15:10	343.8
150					2021-10-29 15:11	341.7
151					2021-10-29 15:12	342.3
152					2021-10-29 15:13	340.6
153					2021-10-29 15:14	339.2
154					2021-10-29 15:15	338.5
155					2021-10-29 15:16	338.0
156					2021-10-29 15:17	337.7
157					2021-10-29 15:18	336.1
158					2021-10-29 15:19	334.6
159					2021-10-29 15:20	333.7
160					2021-10-29 15:21	332.7
161					2021-10-29 15:22	331.0
162					2021-10-29 15:23	329.5
163					2021-10-29 15:24	328.2
164					2021-10-29 15:25	327.1
165					2021-10-29 15:26	324.6
166					2021-10-29 15:27	324.4
167					2021-10-29 15:28	323.9
168					2021-10-29 15:29	322.1
169					2021-10-29 15:30	320.5
170					2021-10-29 15:31	319.5
171					2021-10-29 15:32	319.0

172					2021-10-29 15:33	318.0
173					2021-10-29 15:34	316.9
174					2021-10-29 15:35	315.8
175					2021-10-29 15:36	314.8
176					2021-10-29 15:37	313.9
177					2021-10-29 15:38	313.2
178					2021-10-29 15:39	312.7
179					2021-10-29 15:40	311.4
180					2021-10-29 15:41	310.9
181					2021-10-29 15:42	310.5
182					2021-10-29 15:43	309.5
183					2021-10-29 15:44	308.5
184					2021-10-29 15:45	307.8
185					2021-10-29 15:46	307.1
186					2021-10-29 15:47	306.3
187					2021-10-29 15:48	305.0
188					2021-10-29 15:49	304.8
189					2021-10-29 15:50	305.2
190					2021-10-29 15:51	303.5
191					2021-10-29 15:52	303.3
192					2021-10-29 15:53	302.6
193					2021-10-29 15:54	300.7
194					2021-10-29 15:55	301.6
195					2021-10-29 15:56	300.5
196					2021-10-29 15:57	299.9
197					2021-10-29 15:58	298.3
198					2021-10-29 15:59	298.8
199					2021-10-29 16:00	297.8
200					2021-10-29 16:01	297.1
201					2021-10-29 16:02	297.1
202					2021-10-29 16:03	297.0
203					2021-10-29 16:04	296.1
204					2021-10-29 16:05	295.7
205					2021-10-29 16:06	295.3
206					2021-10-29 16:07	294.6
207					2021-10-29 16:08	294.8
208					2021-10-29 16:09	294.5
209					2021-10-29 16:10	293.9
210					2021-10-29 16:11	292.7
211					2021-10-29 16:12	293.4
212					2021-10-29 16:13	292.3
213					2021-10-29 16:14	291.7
214					2021-10-29 16:15	290.8
215					2021-10-29 16:16	290.1
216					2021-10-29 16:17	289.9
217					2021-10-29 16:18	289.0
218					2021-10-29 16:19	288.7
219					2021-10-29 16:20	287.9
220					2021-10-29 16:21	288.0
221					2021-10-29 16:22	287.6
222					2021-10-29 16:23	286.8
223					2021-10-29 16:24	285.4
224					2021-10-29 16:25	285.0
225					2021-10-29 16:26	284.8
226					2021-10-29 16:27	284.8
227					2021-10-29 16:28	285.1
228					2021-10-29 16:29	284.6
229					2021-10-29 16:30	284.2
230					2021-10-29 16:31	282.9
231					2021-10-29 16:32	282.4
232					2021-10-29 16:33	282.8

233					2021-10-29 16:34	281.8
234					2021-10-29 16:35	281.0
235					2021-10-29 16:36	280.8
236					2021-10-29 16:37	280.1
237					2021-10-29 16:38	280.0
238					2021-10-29 16:39	278.8
239					2021-10-29 16:40	278.6
240					2021-10-29 16:41	277.5
241					2021-10-29 16:42	277.9
242					2021-10-29 16:43	277.2
243					2021-10-29 16:44	277.1
244					2021-10-29 16:45	276.6
245					2021-10-29 16:46	276.4
246					2021-10-29 16:47	276.2
247					2021-10-29 16:48	274.6
248					2021-10-29 16:49	274.3
249					2021-10-29 16:50	274.7
250					2021-10-29 16:51	273.8
251					2021-10-29 16:52	272.8
252					2021-10-29 16:53	272.4
253					2021-10-29 16:54	272.0
254					2021-10-29 16:55	271.5
255					2021-10-29 16:56	270.6
256					2021-10-29 16:57	270.1
257					2021-10-29 16:58	269.6
258					2021-10-29 16:59	269.0
259					2021-10-29 17:00	268.4
260					2021-10-29 17:01	268.0
261					2021-10-29 17:02	267.6
262					2021-10-29 17:03	266.8
263					2021-10-29 17:04	267.0
264					2021-10-29 17:05	266.8
265					2021-10-29 17:06	266.7
266					2021-10-29 17:07	266.1
267					2021-10-29 17:08	264.6
268					2021-10-29 17:09	264.3
269					2021-10-29 17:10	263.9
270					2021-10-29 17:11	263.6
271					2021-10-29 17:12	262.3
272					2021-10-29 17:13	262.1
273					2021-10-29 17:14	261.9
274					2021-10-29 17:15	261.0
275					2021-10-29 17:16	260.8
276					2021-10-29 17:17	260.8
277					2021-10-29 17:18	259.9
278					2021-10-29 17:19	259.9
279					2021-10-29 17:20	259.4
280					2021-10-29 17:21	259.0
281					2021-10-29 17:22	258.3
282					2021-10-29 17:23	257.8
283					2021-10-29 17:24	257.6
284					2021-10-29 17:25	257.2
285					2021-10-29 17:26	257.9
286					2021-10-29 17:27	256.5
287					2021-10-29 17:28	256.5
288					2021-10-29 17:29	255.6
289					2021-10-29 17:30	255.1
290					2021-10-29 17:31	254.7
291					2021-10-29 17:32	254.6
292					2021-10-29 17:33	253.7
293					2021-10-29 17:34	254.1

294					2021-10-29 17:35	252.9
295					2021-10-29 17:36	252.3
296					2021-10-29 17:37	252.4
297					2021-10-29 17:38	252.1
298					2021-10-29 17:39	251.7
299					2021-10-29 17:40	251.1
300					2021-10-29 17:41	250.2
301					2021-10-29 17:42	250.4
302					2021-10-29 17:43	249.8
303					2021-10-29 17:44	249.3
304					2021-10-29 17:45	249.0
305					2021-10-29 17:46	249.0
306					2021-10-29 17:47	248.3
307					2021-10-29 17:48	248.4
308					2021-10-29 17:49	247.5
309					2021-10-29 17:50	247.5
310					2021-10-29 17:51	246.9
311					2021-10-29 17:52	246.2
312					2021-10-29 17:53	246.0
313					2021-10-29 17:54	245.6
314					2021-10-29 17:55	244.9
315					2021-10-29 17:56	245.5
316					2021-10-29 17:57	245.0
317					2021-10-29 17:58	244.8
318					2021-10-29 17:59	244.5
319					2021-10-29 18:00	244.0
320					2021-10-29 18:01	243.3
321					2021-10-29 18:02	243.7
322					2021-10-29 18:03	243.5
323					2021-10-29 18:04	242.6
324					2021-10-29 18:05	242.7
325					2021-10-29 18:06	241.8
326					2021-10-29 18:07	241.3
327					2021-10-29 18:08	240.9
328					2021-10-29 18:09	240.4
329					2021-10-29 18:10	239.9
330					2021-10-29 18:11	240.1
331					2021-10-29 18:12	239.4
332					2021-10-29 18:13	239.0
333					2021-10-29 18:14	238.4
334					2021-10-29 18:15	237.7
335					2021-10-29 18:16	237.2
336					2021-10-29 18:17	236.6
337					2021-10-29 18:18	236.5
338					2021-10-29 18:19	236.3
339					2021-10-29 18:20	235.8
340					2021-10-29 18:21	235.2
341					2021-10-29 18:22	235.2
342					2021-10-29 18:23	235.0
343					2021-10-29 18:24	234.3
344					2021-10-29 18:25	234.1
345					2021-10-29 18:26	233.7
346					2021-10-29 18:27	233.1
347					2021-10-29 18:28	232.2
348					2021-10-29 18:29	231.8
349					2021-10-29 18:30	231.0
350					2021-10-29 18:31	230.4
351					2021-10-29 18:32	230.0
352					2021-10-29 18:33	230.5
353					2021-10-29 18:34	229.2
354					2021-10-29 18:35	228.9

355					2021-10-29 18:36	228.6
356					2021-10-29 18:37	229.2
357					2021-10-29 18:38	228.7
358					2021-10-29 18:39	227.6
359					2021-10-29 18:40	227.6
360					2021-10-29 18:41	227.1
361					2021-10-29 18:42	226.7
362					2021-10-29 18:43	226.3
363					2021-10-29 18:44	225.8
364					2021-10-29 18:45	225.4
365					2021-10-29 18:46	225.4
366					2021-10-29 18:47	224.7
367					2021-10-29 18:48	224.2
368					2021-10-29 18:49	224.8
369					2021-10-29 18:50	223.4
370					2021-10-29 18:51	223.0
371					2021-10-29 18:52	222.4
372					2021-10-29 18:53	222.3
373					2021-10-29 18:54	221.7
374					2021-10-29 18:55	221.5
375					2021-10-29 18:56	220.8
376					2021-10-29 18:57	221.1
377					2021-10-29 18:58	220.4
378					2021-10-29 18:59	220.0
379					2021-10-29 19:00	220.8
380					2021-10-29 19:01	220.3
381					2021-10-29 19:02	220.0
382					2021-10-29 19:03	219.4
383					2021-10-29 19:04	218.6
384					2021-10-29 19:05	219.0
385					2021-10-29 19:06	218.8
386					2021-10-29 19:07	218.6
387					2021-10-29 19:08	218.0
388					2021-10-29 19:09	217.3
389					2021-10-29 19:10	217.2
390					2021-10-29 19:11	216.6
391					2021-10-29 19:12	216.3
392					2021-10-29 19:13	216.0
393					2021-10-29 19:14	216.1
394					2021-10-29 19:15	215.8
395					2021-10-29 19:16	215.4
396					2021-10-29 19:17	214.6
397					2021-10-29 19:18	214.3
398					2021-10-29 19:19	214.2
399					2021-10-29 19:20	214.1
400					2021-10-29 19:21	213.9
401					2021-10-29 19:22	214.0
402					2021-10-29 19:23	213.3
403					2021-10-29 19:24	213.0
404					2021-10-29 19:25	212.7
405					2021-10-29 19:26	212.3
406					2021-10-29 19:27	211.6
407					2021-10-29 19:28	211.8
408					2021-10-29 19:29	211.5
409					2021-10-29 19:30	211.4
410					2021-10-29 19:31	211.1
411					2021-10-29 19:32	211.0
412					2021-10-29 19:33	210.3
413					2021-10-29 19:34	210.0
414					2021-10-29 19:35	209.9
415					2021-10-29 19:36	209.8

416					2021-10-29 19:37	210.1
417					2021-10-29 19:38	209.1
418					2021-10-29 19:39	209.0
419					2021-10-29 19:40	208.8
420					2021-10-29 19:41	209.0
421					2021-10-29 19:42	209.1
422					2021-10-29 19:43	208.3
423					2021-10-29 19:44	208.0
424					2021-10-29 19:45	207.6
425					2021-10-29 19:46	207.3
426					2021-10-29 19:47	207.9
427					2021-10-29 19:48	207.6
428					2021-10-29 19:49	207.1
429					2021-10-29 19:50	206.4
430					2021-10-29 19:51	207.0
431					2021-10-29 19:52	206.2
432					2021-10-29 19:53	205.6
433					2021-10-29 19:54	205.4
434					2021-10-29 19:55	204.9
435					2021-10-29 19:56	204.9
436					2021-10-29 19:57	205.3
437					2021-10-29 19:58	204.9
438					2021-10-29 19:59	204.8
439					2021-10-29 20:00	203.7
440					2021-10-29 20:01	203.6
441					2021-10-29 20:02	203.4
442					2021-10-29 20:03	202.6
443					2021-10-29 20:04	203.0
444					2021-10-29 20:05	202.3
445					2021-10-29 20:06	202.5
446					2021-10-29 20:07	202.2
447					2021-10-29 20:08	202.5
448					2021-10-29 20:09	201.9
449					2021-10-29 20:10	201.6
450					2021-10-29 20:11	201.0

VERSION:	2.4	2010-04-15			
Manufacturer:	SBI		**Appliance Type:**	Non-Cat	(Cat, Non-
Model:	2.5R Series				
Date:	2021-11-02		**Temp. Units**	F	(F or C)
Run:	1		**Weight Units**	lb	(kg or lb)
Control #:	G104845527				
Test Duration:	81				
Output Category:	High		**Fuel Data**		
				Beech	
Wood Moisture (% wet):	17.43		**HHV**	18,800	kJ/kg
Load Weight (lb wet):	17.03		**%C**	48.7	
Burn Rate (dry kg/h):	4.72		**%H**	5.8	
Total Particulate Emissions:	NA	g	**%O**	44.9	
			%Ash	0.6	

	Averages	**0.32**	**8.81**	**#DIV/0!**		**633.93**	**80.15**
						Temp. (°F)	
Elapsed	**Fuel Weight**	**Flue Gas Composition (%)**				**Flue**	**Room**
Time (min)	**Remaining (lb)**	**CO**	**CO_2**	**O_2**		**Gas**	**Temp**
0	17.03	0.39	5.28			523.2	79.8
1	16.76	0.49	8.12			591.3	81.0
2	16.49	0.66	3.75			673.3	81.5
3	16.14	0.76	8.52			631.8	81.0
4	15.80	0.59	11.13			646.2	79.0
5	15.47	0.51	11.86			665.21	76.0007
6	15.13	0.55	12.33			676.528	75.9335
7	14.77	0.56	12.45			689.804	75.4393
8	14.40	0.57	12.32			699.628	75.1986
9	14.03	0.6	12.22			709.81	75.5147
10	13.67	0.62	12.28			717.728	74.6505
11	13.31	0.62	12.25			723.289	74.8534
12	12.94	0.61	12.23			724.716	75.872
13	12.59	0.6	12.07			730.148	74.5935
14	12.23	0.61	12.08			737.683	75.6723
15	11.87	0.62	12.19			743.57	74.9424
16	11.53	0.68	12.33			742.544	73.9041
17	11.17	0.67	12.18			742.644	74.9794
18	10.83	0.64	12.06			742.452	75.1018
19	10.49	0.66	12			743.958	75.1359
20	10.15	0.65	11.94			742.758	75.6883
21	9.81	0.66	11.89			749.23	74.3891
22	9.48	0.68	11.84			746.67	75.14
23	9.14	0.68	11.88			744.332	75.1898
24	8.82	0.64	11.73			742.011	74.8449
25	8.52	0.6	11.63			735.52	75.1459
26	8.22	0.56	11.46			731.999	76.1838
27	7.91	0.52	11.3			726.072	76.1787
28	7.62	0.53	11.21			724.256	76.1221
29	7.32	0.53	11.11			719.01	76.2498
30	7.03	0.51	11.04			715.365	76.0699
31	6.76	0.49	10.9			711.152	75.872
32	6.48	0.49	10.62			704.509	75.9401
33	6.23	0.47	10.45			699.132	77.6374
34	5.97	0.47	10.28			695.685	77.6172
35	5.72	0.07389	10.11			689.806	77.5416
36	5.49	0.05791	9.99			686.176	76.749
37	5.24	0.05013	9.86			683.223	76.9871
38	4.99	0.04298	9.9			681.198	76.9561
39	4.76	0.04155	9.84			676.919	76.9053
40	4.53	0.04288	9.88			674.27	78.3997
41	4.30	0.04516	9.77			674.219	78.5438
42	4.07	0.04147	9.81			670.315	77.6807
43	3.86	0.0407	9.82			669.559	76.8251
44	3.65	0.03599	9.73			666.026	78.5569
45	3.45	0.03354	9.7			661.843	79.4146
46	3.26	0.03216	9.69			659.544	80.0514
47	3.08	0.03042	9.59			656.38	80.5771
48	2.89	0.02691	9.51			653.094	80.8539
49	2.73	0.02629	9.37			652.039	81.2576
50	2.55	0.01802	9.07			646.877	81.7091
51	2.39	0.02046	8.87			639.528	82.36
52	2.25	0.01699	8.43			629.243	82.4054
53	2.10	0.01407	8.15			621.049	82.6382
54	1.98	0.01137	7.78			610.803	82.699
55	1.86	0.00902	7.35			602.632	82.736
56	1.74	0.01012	7.12			595.474	82.7171
57	1.64	0.01364	6.85			586.428	81.7243
58	1.52	0.01849	6.68			578.245	82.6253
59	1.42	0.02059	6.48			573.056	80.8279
60	1.32	0.02073	6.29			568.355	83.9843
61	1.18	0.02993	6.77			562.153	85.3831
62	1.06	0.03486	6.74			557.879	86.7604
63	0.90	0.03024	6.72			554.558	87.4848
64	0.83	0.02627	6.59			552.531	82.6162
65	0.75	0.02282	6.48			548.494	81.9082
66	0.66	0.0214	6.23			538.86	82.5013
67	0.66	0.02741	5.86			528.764	83.0092
68	0.61	0.03461	5.49			521.172	86.6043
69	0.53	0.04392	5.34			513.441	88.3086
70	0.41	0.05329	5.2			510.11	86.4131
71	0.41	0.06655	5.08			502.421	85.3841
72	0.34	0.07627	4.95			495.829	88.2203
73	0.28	0.39	4.66			486.408	88.9869
74	0.25	0.46	4.05			477.778	90.0579
75	0.19	0.5	3.72			473.078	90.228
76	0.15	0.53	3.62			467.477	89.3543
77	0.11	0.53	3.47			461.579	85.4183
78	0.15	0.53	3.32			453.308	84.9711
79	0.11	0.53	3.28			447.248	87.6502
80	0.07	0.52	3.25			441.361	89.3499
81	0.00	0.52	3.26			438.167	89.5827

Stove Builder International Inc.

Manufacturer: SBI
Model: 2.5R Series
Date: 11-02-21
Run: 1
Control #: G104845527
Test Duration: 81
Output Category: High

Technicians: Claude Pelland, P.Eng.
Hussein Mortada, CPI

Test Results in Accordance with CSA B415.1-10

	HHV Basis	LHV Basis
Overall Efficiency	62.8%	67.3%
Combustion Efficiency	97.0%	97.0%
Heat Transfer Efficiency	65%	69.4%

Output Rate (kJ/h)	55,814	52,946	**(Btu/h)**
Burn Rate (kg/h)	4.73	10.42	**(lb/h)**
Input (kJ/h)	88,851	84,284	**(Btu/h)**

Test Load Weight (dry kg)	6.38	14.06	**dry lb**
MC wet (%)	17.428		
MC dry (%)	21.11		
Particulate (g)	NA		
CO (g)	277		
Test Duration (h)	1.35		

Emissions	Particulate	CO
g/MJ Output	#VALEUR!	3.68
g/kg Dry Fuel	#VALEUR!	43.49
g/h	#VALEUR!	205.55
lb/MM Btu Output	#VALEUR!	8.56

Air/Fuel Ratio (A/F)	11.64

VERSION: **2.4** **2010-04-15**

VERSION: 2.4 2010-04-15

Manufacturer:	SBI		**Appliance Type:**	Non-Cat	(Cat, Non
Model:	2.5R Series				
Date:	2021-11-02		**Temp. Units**	F	(F or C)
Run:	1		**Weight Units**	lb	(kg or lb)
Control #:	G104845527				
Test Duration:	440				
Output Category:	Low		**Fuel Data**		
				Beech	
Wood Moisture (% wet):	17.10		**HHV**	18,800	kJ/kg
Load Weight (lb wet):	23.47		**%C**	48.7	
Burn Rate (dry kg/h):	1.20		**%H**	5.8	
Total Particulate Emissions:	7.319 g		**%O**	44.9	
			%Ash	0.6	

Averages	**0.37**	**3.75**	**#DIV/0!**	**311.29**	**76.97**	
				Temp. (ºF)	
Elapsed Time (min)	**Fuel Weight Remaining (lb)**	**Flue Gas Composition (%) CO**	**CO_2**	**O_2**	**Flue Gas**	**Room Temp**
0	23.47	1.16	12.10		419.2	89.2
10	19.80	0.03	8.11		671.6	87.3
20	17.74	0.06	7.18		542.9	84.5
30	16.07	0.05	7.54		507.0	88.3
40	14.60	0.05	7.77		497.3	87.9
50	13.09	0.03917	7.86		495.345	85.2317
60	11.66	0.51	9.56		488.689	85.3241
70	10.12	0.0219	8.3		535.329	83.9335
80	8.17	0.04064	6.48		524.703	77.2016
90	6.98	0.06528	5.41		478.25	79.2768
100	6.21	0.06025	5.24		436.666	82.8409
110	5.42	0.41	4.07		421.891	86.0855
120	5.03	0.44	3.67		387.93	83.2183
130	4.76	0.47	3.47		352.241	84.2575
140	4.74	0.5	3.1		326.449	81.2933
150	4.52	0.5	3.07		305.791	79.8697
160	4.26	0.5	3.06		287.745	79.3639
170	4.06	0.49	3.09		276.59	79.255
180	3.83	0.48	3.14		268.065	78.5924
190	3.61	0.49	3.1		263.813	78.2062
200	3.39	0.48	3.05		260.509	78.107
210	3.16	0.48	2.99		257.793	78.0369
220	2.88	0.47	2.75		255.746	74.1003
230	2.64	0.47	2.77		250.306	73.0006
240	2.41	0.47	2.79		247.38	72.3504
250	2.20	0.46	2.67		246.683	71.6977
260	2.02	0.45	2.59		244.234	71.583
270	1.85	0.44	2.51		239.561	71.6061
280	1.68	0.44	2.45		233.826	71.5625
290	1.54	0.44	2.41		230.238	71.8027
300	1.40	0.43	2.39		227.175	71.1621
310	1.25	0.42	2.31		223.432	71.425
320	1.12	0.42	2.26		220.886	71.517
330	0.99	0.39	1.96		218.299	71.9476
340	0.88	0.39	1.93		213.487	71.6444
350	0.77	0.39	1.84		208.679	71.4114
360	0.68	0.39	1.81		204.892	71.1959
370	0.58	0.39	1.83		201.294	71.1799
380	0.49	0.37	1.8		198.834	71.2327
390	0.37	0.37	1.77		196.149	71.0418
400	0.28	0.37	1.72		193.918	71.0781
410	0.19	0.36	1.62		191.671	70.9372
420	0.11	0.33	1.31		189.577	70.925
430	0.03	0.29	1.05		185.032	70.8615
440	0.00	0.27	0.94		180.846	70.8381

Stove Builder International Inc.

Manufacturer: SBI
Model: 2.5R Series
Date: 11-02-21
Run: 1
Control #: G104845527
Test Duration: 440
Output Category: Low

Technicians: Claude Pelland, P.Eng.
Hussein Mortada, CPI

Test Results in Accordance with CSA B415.1-10

	HHV Basis	LHV Basis
Overall Efficiency	63.7%	68.2%
Combustion Efficiency	97.1%	97.1%
Heat Transfer Efficiency	66%	70.3%

Output Rate (kJ/h)	14,420	13,679	**(Btu/h)**
Burn Rate (kg/h)	1.20	2.65	**(lb/h)**
Input (kJ/h)	22,635	21,471	**(Btu/h)**

Test Load Weight (dry kg)	8.83	19.46	**dry lb**
MC wet (%)	17.1		
MC dry (%)	20.63		
Particulate (g)	7.319		
CO (g)	426		
Test Duration (h)	7.33		

Emissions	Particulate	CO
g/MJ Output	0.07	4.03
g/kg Dry Fuel	0.83	48.26
g/h	1.00	58.10
lb/MM Btu Output	0.16	9.36

Air/Fuel Ratio (A/F)	22.37

VERSION: **2.4** **2010-04-15**

VERSION: 2.4 2010-04-15

Manufacturer: SBI
Model: 2.5R Series
Date: 2021-11-03
Run: 2
Control #: G104845527
Test Duration: 68
Output Category: High

Appliance Type: Non-Cat (Cat, Non

Temp. Units F (F or C)
Weight Units lb (kg or lb)

Fuel Data

	Beech	
HHV	18,800	kJ/kg
%C	48.7	
%H	5.8	
%O	44.9	
%Ash	0.6	

Wood Moisture (% wet): 17.10
Load Weight (lb wet): 16.62
Burn Rate (dry kg/h): 5.52
Total Particulate Emissions: NA g

	Averages	0.50	9.87	#DIV/0!	688.55	77.93
					Temp. (ºF)	
Elapsed Time (min)	Fuel Weight Remaining (lb)	Flue Gas Composition (%) CO	CO_2	O_2	Flue Gas	Room Temp
0	16.62	0.47	8.13		487.1	79.4
1	16.51	0.43	3.21		585.8	80.5
2	16.06	0.67	4.93		612.3	80.8
3	15.73	0.66	9.52		623.9	79.1
4	15.41	0.52	10.51		648.3	74.8
5	15.12	0.48	11.14		655.211	76.2908
6	14.80	0.46	10.96		668.332	75.5317
7	14.50	0.46	11.17		670.381	74.6889
8	14.18	0.46	10.94		678.242	76.2999
9	13.85	0.46	11.1		685.918	74.8197
10	13.51	0.46	11.07		707.775	75.8306
11	13.16	0.55	11.91		728.677	74.8458
12	12.81	0.57	12.41		740.733	75.0442
13	12.45	0.53	12.6		749.031	74.3846
14	12.08	0.59	12.47		764.528	75.3943
15	11.73	0.61	12.88		775.872	74.7106
16	11.35	0.6	13.12		779.959	75.229
17	10.98	0.59	13.07		788.948	74.9489
18	10.62	0.61	13.22		791.443	75.4552
19	10.26	0.58	13.16		791.311	75.98
20	9.90	0.57	13.01		791.928	75.0009
21	9.54	0.61	12.81		787.642	75.7906
22	9.20	0.56	12.74		783.34	76.2165
23	8.85	0.6	12.42		780.616	76.883
24	8.52	0.58	12.34		778.152	77.0358
25	8.19	0.57	12.25		773.804	76.0289
26	7.86	0.55	12.19		770.106	77.0369
27	7.53	0.57	12.04		767.717	77.1347
28	7.22	0.56	12.01		765.596	77.1367
29	6.89	0.56	12.02		764.94	77.2366
30	6.57	0.58	12.02		762.983	77.3215
31	6.25	0.59	11.95		763.104	78.1274
32	5.94	0.61	11.97		760.037	77.8337
33	5.65	0.62	11.86		755.747	76.9312
34	5.34	0.57	11.75		752.197	76.576
35	5.04	0.6	11.58		745.979	77.5567
36	4.75	0.61	11.38		743.251	78.7297
37	4.49	0.62	11.25		740.243	78.6804
38	4.19	0.61	11.27		737.655	78.955
39	3.91	0.53	11.41		732.345	78.2565
40	3.66	0.59	11.12		730.129	76.5462
41	3.37	0.58	11.1		731.98	79.3005
42	3.12	0.62	11.37		728.374	80.2229
43	2.89	0.58	11.07		715.321	79.6877
44	2.66	0.51	10.22		707.478	77.9049
45	2.46	0.46	9.81		706.365	77.4599
46	2.24	0.44	9.69		697.448	79.1171
47	2.06	0.44	9.54		692.466	80.0799
48	1.88	0.43	9.4		690.483	80.2365
49	1.69	0.43	9.32		685.806	79.9226
50	1.50	0.43	9.25		678.976	78.835
51	1.33	0.42	9.16		673.192	78.5156
52	1.17	0.41	8.83		660.751	77.7509
53	1.03	0.41	8.24		650.717	79.4507
54	0.90	0.38	7.91		645.297	78.462
55	0.79	0.36	7.81		637.958	79.5447
56	0.68	0.36	7.53		625.366	80.1978
57	0.59	0.35	6.66		610.267	77.8876
58	0.53	0.34	6.12		598.443	79.7121
59	0.45	0.34	5.75		585.116	77.8366
60	0.39	0.33	5.51		577.635	78.2363
61	0.36	0.33	5.19		566.476	77.3395
62	0.31	0.32	4.99		557.903	78.9333
63	0.25	0.32	4.94		547.507	79.6332
64	0.22	0.33	4.84		537.585	79.7689
65	0.17	0.33	4.66		529.897	82.3793
66	0.09	0.33	4.36		523.096	83.9473
67	0.06	0.34	4.29		517.178	84.9203
68	0.00	0.35	4.23		509.495	85.1488

Stove Builder International Inc.

Manufacturer: SBI
Model: 2.5R Series
Date: 11-03-21
Run: 2
Control #: G104845527
Test Duration: 68
Output Category: High

Technicians: Claude Pelland, P.Eng.
Hussein Mortada, CPI

Test Results in Accordance with CSA B415.1-10

	HHV Basis	LHV Basis
Overall Efficiency	61.7%	66.1%
Combustion Efficiency	96.0%	96.0%
Heat Transfer Efficiency	64%	68.9%

Output Rate (kJ/h)	64,005	60,716	**(Btu/h)**
Burn Rate (kg/h)	5.52	12.16	**(lb/h)**
Input (kJ/h)	103,724	98,394	**(Btu/h)**

Test Load Weight (dry kg)	6.25	13.78	**dry lb**
MC wet (%)	17.1		
MC dry (%)	20.63		
Particulate (g)	NA		
CO (g)	351		
Test Duration (h)	1.13		

Emissions	Particulate	CO
g/MJ Output	#VALEUR!	4.84
g/kg Dry Fuel	#VALEUR!	56.12
g/h	#VALEUR!	309.63
lb/MM Btu Output	#VALEUR!	11.24

Air/Fuel Ratio (A/F)	10.41

VERSION: **2.4** **2010-04-15**

VERSION: 2.4 2010-04-15

Manufacturer: SBI
Model: 2.5R Series
Date: 2021-11-03
Run: 2
Control #: G104845527
Test Duration: 480
Output Category: Low

Appliance Type: Non-Cat (Cat, Non

Temp. Units F (F or C)
Weight Units lb (kg or lb)

Fuel Data

	Beech	
HHV	18,800	kJ/kg
%C	48.7	
%H	5.8	
%O	44.9	
%Ash	0.6	

Wood Moisture (% wet): 16.30
Load Weight (lb wet): 22.96
Burn Rate (dry kg/h): 1.09
Total Particulate Emissions: 3.039 g

Averages		**0.40**	**3.50**	**#DIV/0!**	**306.42**	**83.83**
					Temp. (ºF)	
Elapsed Time (min)	**Fuel Weight Remaining (lb)**	**Flue Gas Composition (%) CO**	**CO_2**	**O_2**	**Flue Gas**	**Room Temp**
0	22.96	0.42	3.29		447.1	89.0
10	19.81	0.07	10.52		632.8	82.3
20	18.01	0.46	6.96		510.7	86.0
30	16.42	0.45	7.02		498.9	82.1
40	14.88	0.04	7.56		484.7	82.0
50	13.45	0.02559	7.72		483.95	81.1924
60	11.85	0.04077	8.67		499.121	79.3018
70	10.13	0.01308	8.61		498.806	76.4221
80	8.25	0.91	9.98		544.805	76.2952
90	6.76	0.00799	7.67		503.473	76.663
100	5.80	0.02228	5.78		460.091	76.7851
110	5.34	0.39	4.29		418.381	79.8356
120	5.10	0.49	3.48		367.092	79.4792
130	4.91	0.54	3.32		334.681	78.9172
140	4.51	0.57	3.34		312.481	84.6744
150	4.17	0.56	3.35		303.129	87.4465
160	3.91	0.57	3.23		294.844	87.2074
170	3.70	0.55	3.14		287.255	87.2305
180	3.54	0.53	3.04		282.565	86.4638
190	3.41	0.52	3		277.214	84.8802
200	3.24	0.51	2.93		272.313	84.7983
210	3.09	0.5	2.64		265.236	83.7608
220	2.93	0.5	2.6		260.614	84.2209
230	2.79	0.49	2.57		257.017	83.8331
240	2.64	0.49	2.53		252.742	83.5904
250	2.45	0.48	2.52		249.447	83.745
260	2.25	0.48	2.44		247.416	84.4279
270	2.09	0.48	2.4		245.024	84.8483
280	1.94	0.48	2.35		243.016	84.7359
290	1.80	0.47	2.26		240.55	85.4046
300	1.68	0.47	2.23		238.077	85.4526
310	1.55	0.46	2.12		234.156	85.2537
320	1.44	0.44	2.02		230.658	85.8529
330	1.32	0.44	2		228.198	85.0852
340	1.22	0.43	1.89		224.707	86.1141
350	1.12	0.42	1.85		221.292	86.3985
360	1.01	0.41	1.8		218.208	85.9379
370	0.91	0.41	1.72		216.106	85.9912
380	0.82	0.4	1.67		213.073	85.8599
390	0.73	0.4	1.67		210.435	85.9144
400	0.63	0.39	1.66		208.465	85.5039
410	0.54	0.38	1.65		206.326	85.5891
420	0.46	0.38	1.62		204.417	85.2718
430	0.37	0.37	1.56		203.05	84.7222
440	0.29	0.37	1.53		202.758	84.4414
450	0.21	0.36	1.49		201.06	84.4603
460	0.13	0.34	1.34		196.459	84.0752
470	0.06	0.33	1.27		192.682	84.1889
480	0.00	0.32	1.22		189.034	83.9805

Stove Builder International Inc.

Manufacturer:	SBI
Model:	2.5R Series
Date:	11-03-21
Run:	2
Control #:	G104845527
Test Duration:	480
Output Category:	Low

Technicians: Claude Pelland, P.Eng.

Hussein Mortada, CPI

Test Results in Accordance with CSA B415.1-10

	HHV Basis	LHV Basis
Overall Efficiency	65.4%	70.0%
Combustion Efficiency	95.9%	95.9%
Heat Transfer Efficiency	68%	73.0%

Output Rate (kJ/h)	13,394	12,706	**(Btu/h)**
Burn Rate (kg/h)	1.09	2.40	**(lb/h)**
Input (kJ/h)	20,494	19,441	**(Btu/h)**

Test Load Weight (dry kg)	8.72	19.22	**dry lb**
MC wet (%)	16.3		
MC dry (%)	19.47		
Particulate (g)	3.039		
CO (g)	554		
Test Duration (h)	8.00		

Emissions	**Particulate**	**CO**
g/MJ Output	0.03	5.17
g/kg Dry Fuel	0.35	63.52
g/h	0.38	69.24
lb/MM Btu Output	0.07	12.01

Air/Fuel Ratio (A/F)	23.30

VERSION: **2.4** **2010-04-15**

VERSION: 2.4 2010-04-15

Manufacturer: SBI
Model: 2.5R Series
Date: 2021-11-04
Run: 3
Control #: G104845527
Test Duration: 76
Output Category: High

Appliance Type: Non-Cat (Cat, Non
Temp. Units F (F or C)
Weight Units lb (kg or lb)

Fuel Data

	Beech	
HHV	18,800	kJ/kg
%C	48.7	
%H	5.8	
%O	44.9	
%Ash	0.6	

Wood Moisture (% wet): 17.28
Load Weight (lb wet): 16.85
Burn Rate (dry kg/h): 4.99
Total Particulate Emissions: NA g

	Averages	0.48	9.33	#DIV/0!	674.46	77.98
					Temp. (°F)	
Elapsed Time (min)	Fuel Weight Remaining (lb)	Flue Gas Composition (%) CO	CO_2	O_2	Flue Gas	Room Temp
0	16.85	0.49	8.63		568.5	79.5
1	16.68	0.38	4.01		634.8	80.8
2	16.50	0.56	10.57		647.9	80.5
3	16.13	0.51	11.44		661.5	76.7
4	15.82	0.49	11.49		669.0	75.5
5	15.50	0.52	11.4		678.455	75.2746
6	15.19	0.51	11.32		681.827	75.485
7	14.85	0.51	11.24		693.867	75.2125
8	14.52	0.53	11.46		701.091	75.0523
9	14.19	0.55	11.48		713.723	74.2279
10	13.82	0.64	11.75		726.205	74.3789
11	13.47	0.67	11.91		736.128	74.7163
12	13.10	0.68	11.82		741.272	74.7365
13	12.75	0.66	11.94		748.047	74.4066
14	12.38	0.66	12.02		758.907	74.0291
15	12.03	0.69	12.17		765.827	74.5465
16	11.68	0.68	12.29		773.968	75.1713
17	11.33	0.66	12.37		778.255	74.4871
18	10.97	0.61	12.44		778.486	74.0894
19	10.60	0.63	12.28		781.692	74.0479
20	10.26	0.59	12.36		784.081	74.4123
21	9.90	0.6	12.37		783.147	73.5663
22	9.55	0.63	12.32		782.785	74.4898
23	9.21	0.6	12.28		782.644	74.0125
24	8.86	0.6	12.17		780.339	74.3565
25	8.53	0.6	12.09		781.864	75.1451
26	8.20	0.58	11.99		777.832	75.7441
27	7.87	0.56	11.84		773.408	74.5532
28	7.56	0.58	11.69		769.615	75.4298
29	7.25	0.57	11.58		766.613	74.7979
30	6.94	0.57	11.38		762.551	75.7441
31	6.64	0.54	11.26		755.624	75.282
32	6.35	0.53	11.14		750.995	75.1388
33	6.05	0.52	10.98		748.627	75.0656
34	5.77	0.5	10.91		743.053	74.635
35	5.49	0.5	10.8		741.084	75.792
36	5.22	0.5	10.67		737.328	75.6302
37	4.96	0.49	10.53		731.18	76.5341
38	4.70	0.49	10.48		729.483	76.7386
39	4.44	0.49	10.49		727.381	76.78
40	4.19	0.48	10.42		720.477	76.5186
41	3.94	0.43	10.13		713.9	76.82
42	3.72	0.42	10.04		712.413	76.0204
43	3.51	0.41	9.84		708.236	76.9274
44	3.29	0.41	9.53		704.09	76.7174
45	3.08	0.4	9.49		701.828	77.399
46	2.90	0.39	9.04		692.453	75.368
47	2.75	0.38	8.55		680.396	76.2412
48	2.61	0.37	8.16		671.592	76.4967
49	2.48	0.37	8.02		664.052	77.2046
50	2.33	0.37	7.91		655.68	76.8888
51	2.21	0.36	7.87		648.515	78.3219
52	2.08	0.37	7.82		640.745	77.1017
53	1.95	0.37	7.73		633.309	76.5463
54	1.84	0.37	7.66		625.877	77.1604
55	1.73	0.36	7.55		621.762	78.233
56	1.59	0.37	7.43		615.215	79.368
57	1.47	0.37	7.3		607.989	79.0983
58	1.34	0.36	7.21		604.203	80.4681
59	1.23	0.37	7.09		598.132	79.9041
60	1.10	0.37	7.01		593.597	80.7736
61	1.01	0.37	6.95		587.635	79.3004
62	0.90	0.37	6.77		582.892	80.212
63	0.79	0.36	6.62		573.687	81.0105
64	0.69	0.36	6.56		572.379	81.3922
65	0.60	0.36	6.58		571.213	81.9315
66	0.54	0.37	6.59		563.504	85.1477
67	0.44	0.35	5.9		556.534	86.7619
68	0.37	0.35	5.38		546.387	87.4617
69	0.31	0.35	5.07		535.108	88.2799
70	0.25	0.36	4.89		529.524	88.7778
71	0.19	0.37	4.87		522.96	89.5512
72	0.13	0.37	4.78		514.926	89.6504
73	0.07	0.37	4.56		508.743	86.6497
74	0.04	0.37	4.52		505.377	84.8166
75	0.03	0.38	4.49		502.056	84.0903
76	0.00	0.38	4.5		497.232	83.2221

Stove Builder International Inc.

Manufacturer: SBI
Model: 2.5R Series
Date: 11-04-21
Run: 3
Control #: G104845527
Test Duration: 76
Output Category: High

Technicians: Claude Pelland, P.Eng.
Hussein Mortada, CPI

Test Results in Accordance with CSA B415.1-10

	HHV Basis	LHV Basis
Overall Efficiency	61.6%	66.0%
Combustion Efficiency	96.1%	96.1%
Heat Transfer Efficiency	64%	68.7%

Output Rate (kJ/h)	57,862	54,888	**(Btu/h)**
Burn Rate (kg/h)	4.99	11.00	**(lb/h)**
Input (kJ/h)	93,865	89,041	**(Btu/h)**

Test Load Weight (dry kg)	6.32	13.94	**dry lb**
MC wet (%)	17.278		
MC dry (%)	20.89		
Particulate (g)	NA		
CO (g)	347		
Test Duration (h)	1.27		

Emissions	Particulate	CO
g/MJ Output	#VALEUR!	4.73
g/kg Dry Fuel	#VALEUR!	54.83
g/h	#VALEUR!	273.77
lb/MM Btu Output	#VALEUR!	11.00

Air/Fuel Ratio (A/F)	10.93

VERSION: **2.4** **2010-04-15**

VERSION: 2.4 2010-04-15

Manufacturer:	SBI		**Appliance Type:**	Non-Cat	(Cat, Non
Model:	2.5R Series				
Date:	2021-11-04		**Temp. Units**	F	(F or C)
Run:	3		**Weight Units**	lb	(kg or lb)
Control #:	G104845527				
Test Duration:	355				
Output Category:	Medium				

			Fuel Data		
				Beech	
Wood Moisture (% wet):	16.65		**HHV**	18,800	kJ/kg
Load Weight (lb wet):	21.19		**%C**	48.7	
Burn Rate (dry kg/h):	1.35		**%H**	5.8	
Total Particulate Emissions:	4.658	g	**%O**	44.9	
			%Ash	0.6	

	Averages	**0.32**	**3.67**	**#DIV/0!**	**357.67**	**85.31**	
						Temp. (ºF)	
Elapsed Time (min)	**Fuel Weight Remaining (lb)**	**Flue Gas Composition (%)** **CO**	**CO_2**	**O_2**	**Flue Gas**	**Room Temp**	
0	21.19	0.45	2.67		438.5	78.5	
10	18.34	0.03	9.49		623.0	88.6	
20	16.41	0.04	7.45		555.5	85.6	
30	14.71	0.02	7.32		544.4	82.4	
40	13.13	0.03	6.89		527.5	85.1	
50	11.56	0.03746	6.84		527.001	85.7537	
60	9.91	0.02093	7.59		537.523	88.3492	
70	8.53	0.02404	7.59		534.181	87.7155	
80	7.10	0.00948	7.54		528.512	88.6583	
90	5.73	0.01564	7.51		542.672	87.1437	
100	4.59	0.00756	6.86		519.076	87.74	
110	3.83	0.03938	4.84		473.309	87.8868	
120	3.53	0.45	3.24		407.519	88.5508	
130	3.32	0.51	2.96		368.222	88.3751	
140	3.11	0.5	2.81		344.189	88.9241	
150	2.84	0.5	2.59		326.042	89.6334	
160	2.71	0.5	2.56		315.635	81.6987	
170	2.56	0.5	2.53		304.648	80.4252	
180	2.36	0.5	2.49		294.981	79.704	
190	2.11	0.49	2.45		286.115	86.3844	
200	1.86	0.48	2.27		280.139	88.4416	
210	1.68	0.48	2.26		274.015	89.0624	
220	1.51	0.47	2.24		269.691	89.3962	
230	1.39	0.46	2.22		266.631	86.1812	
240	1.23	0.47	2.19		264.247	85.9768	
250	1.10	0.46	2		260.202	85.5837	
260	0.96	0.45	1.95		255.904	84.7881	
270	0.82	0.44	1.89		251.873	85.4589	
280	0.70	0.43	1.89		248.97	84.8001	
290	0.58	0.42	1.86		246.057	84.0431	
300	0.47	0.41	1.71		242.287	84.2685	
310	0.37	0.41	1.69		238.691	84.0291	
320	0.26	0.4	1.66		235.539	83.7761	
330	0.16	0.39	1.6		231.935	83.7268	
340	0.09	0.37	1.49		227.381	81.0984	
350	0.04	0.41	1.34		221.815	79.4438	
355	0.00	0.37	1.24		219.718	79.3357	

Stove Builder International Inc.

Manufacturer: SBI
Model: 2.5R Series
Date: 11-04-21
Run: 3
Control #: G104845527
Test Duration: 355
Output Category: Medium

Technicians: Claude Pelland, P.Eng.
Hussein Mortada, CPI

Test Results in Accordance with CSA B415.1-10

	HHV Basis	LHV Basis
Overall Efficiency	63.7%	68.3%
Combustion Efficiency	97.9%	97.9%
Heat Transfer Efficiency	65%	69.7%

Output Rate (kJ/h)	16,223	15,389	**(Btu/h)**
Burn Rate (kg/h)	1.35	2.99	**(lb/h)**
Input (kJ/h)	25,463	24,154	**(Btu/h)**

Test Load Weight (dry kg)	8.01	17.66	**dry lb**
MC wet (%)	16.65		
MC dry (%)	19.98		
Particulate (g)	4.658		
CO (g)	297		
Test Duration (h)	5.92		

Emissions	Particulate	CO
g/MJ Output	0.05	3.10
g/kg Dry Fuel	0.58	37.08
g/h	0.79	50.22
lb/MM Btu Output	0.11	7.19

Air/Fuel Ratio (A/F)	22.91

VERSION: **2.4** **2010-04-15**

1. Tunnel cleaning pictures

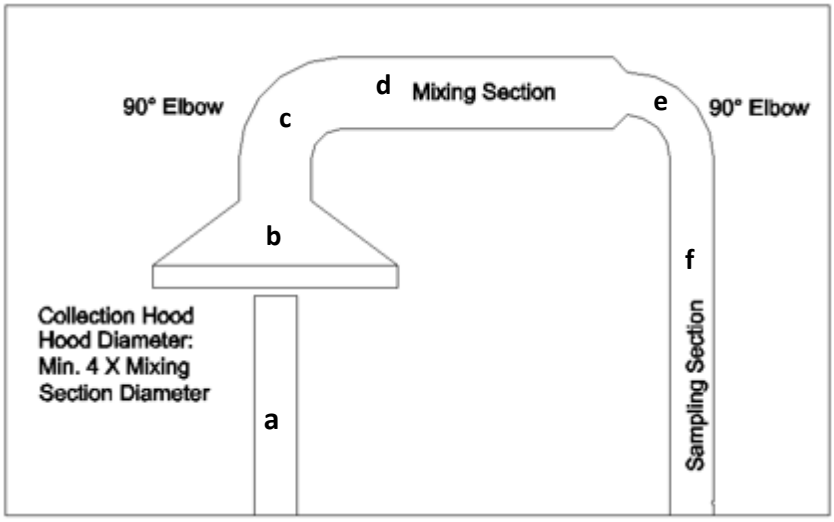

a. Picture of the chimney

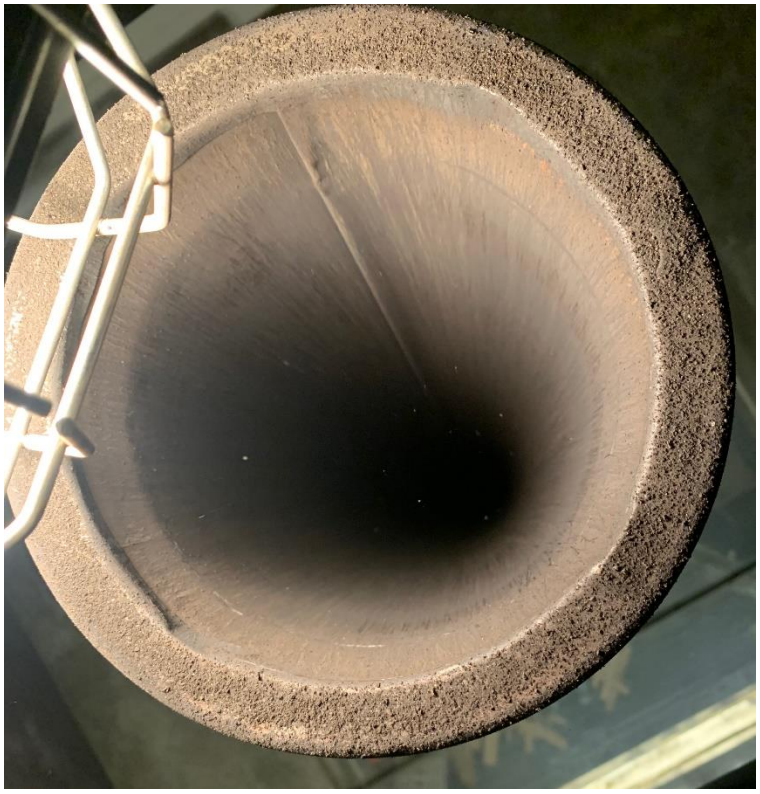

b. Picture of the collecting hood



c. Picture of the first elbow



d. Picture of the mixing section



e. Picture of the second elbow

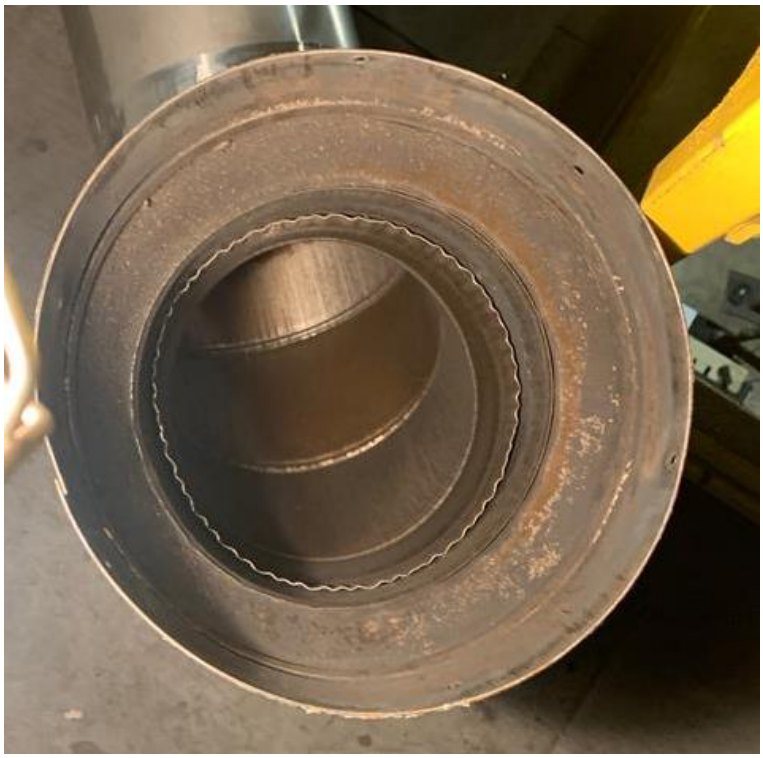

f. Picture of the sampling section



g. Chimney



h. Mixing section

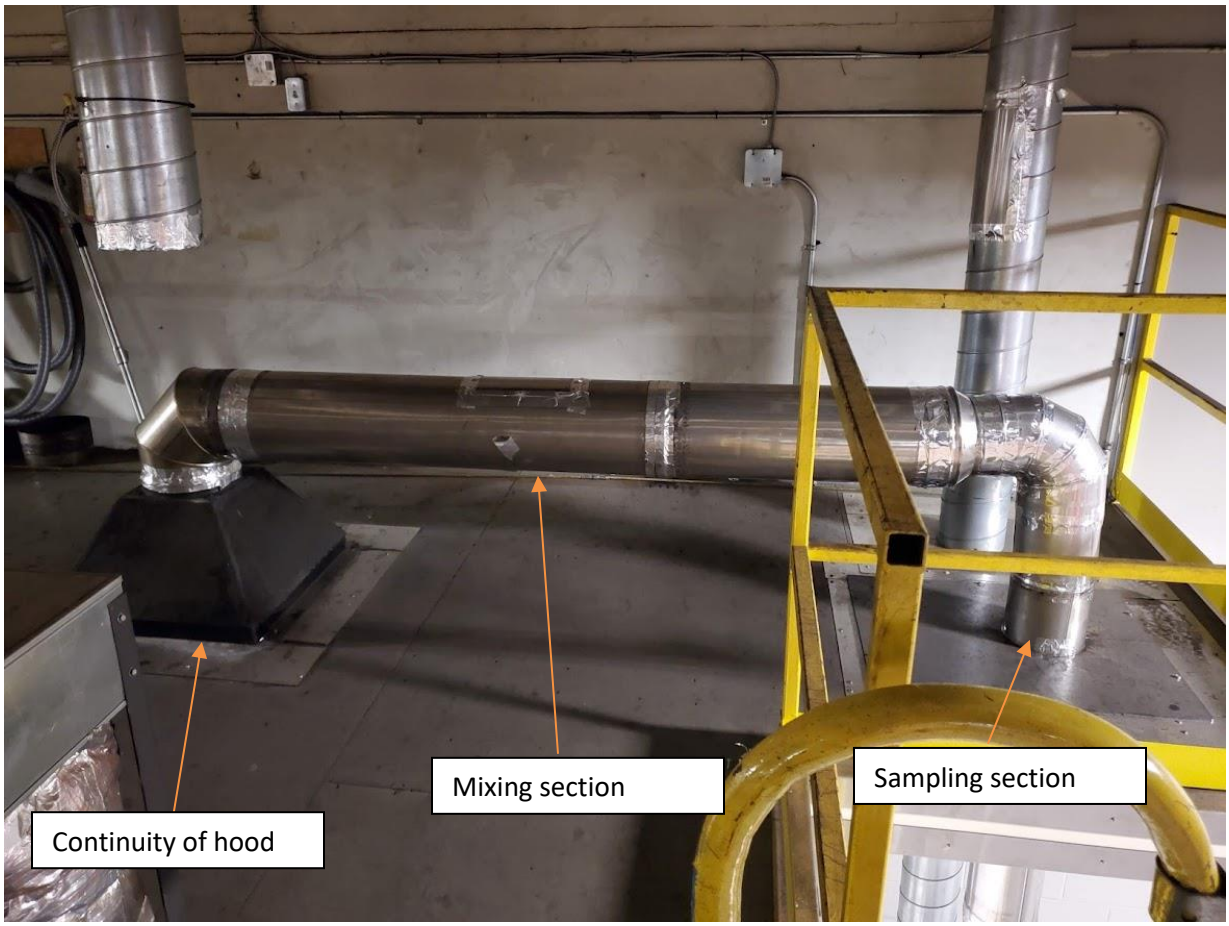

i. Sampling section

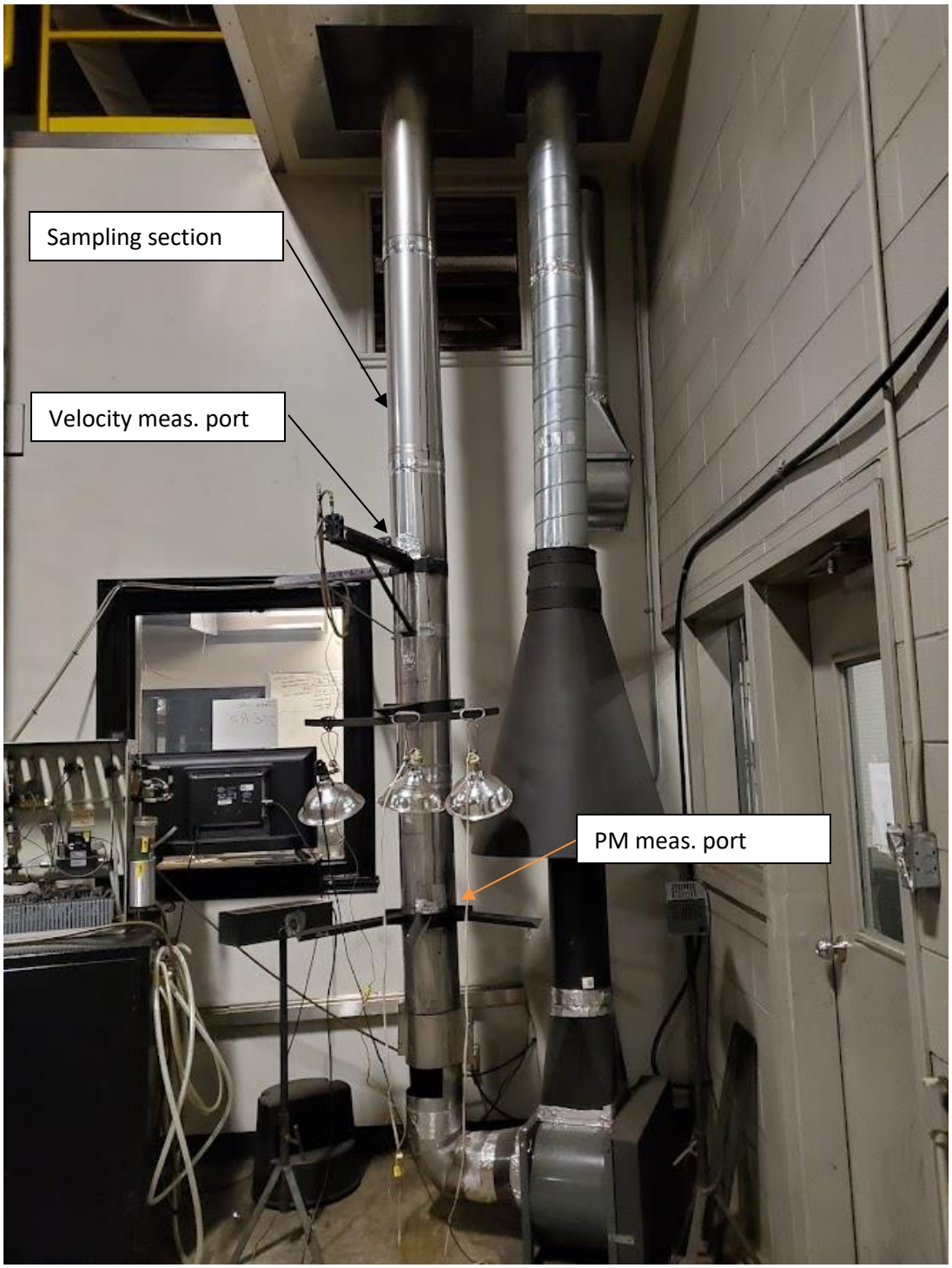

2. Identification pictures

a. Front view



b. Rear view



c. Iso view



3. Test run pictures

a. Run #1 High

i. Picture of the kindling and Start-Up fuel



ii. Picture of the load inside of the combustion chamber



iii. Picture of the coal bed before loading the high fire load



iv. High fire load



v. High fire load inside the combustion chamber

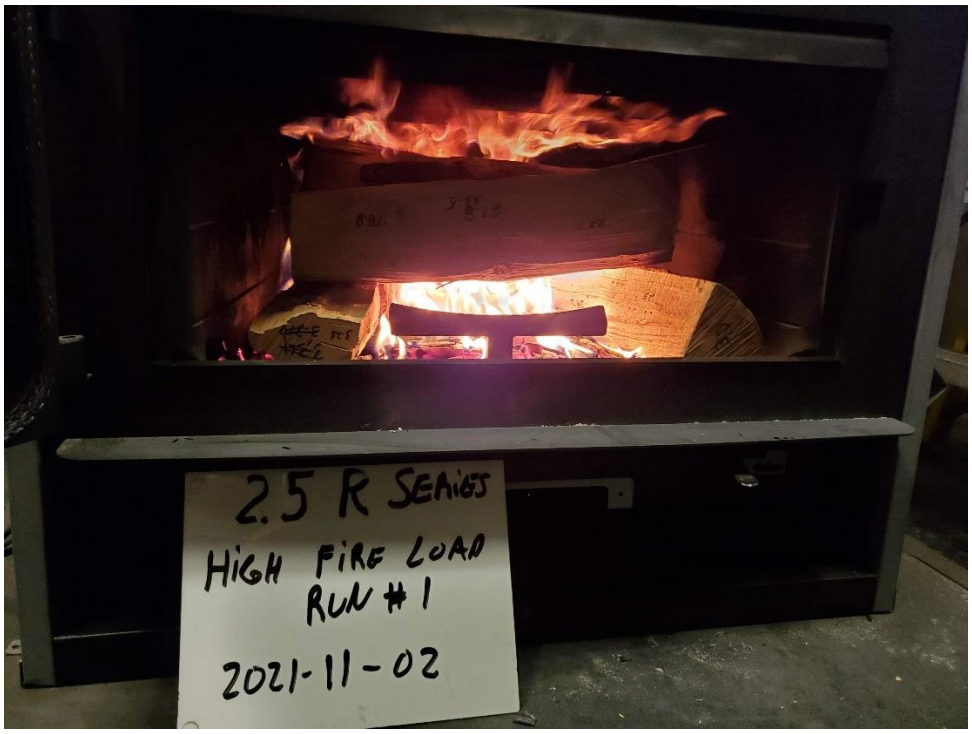

b. Run #1 - Low
    i. Picture of the load





ii. Picture of the coal bed before loading



iii. Picture of the load inside the combustion chamber

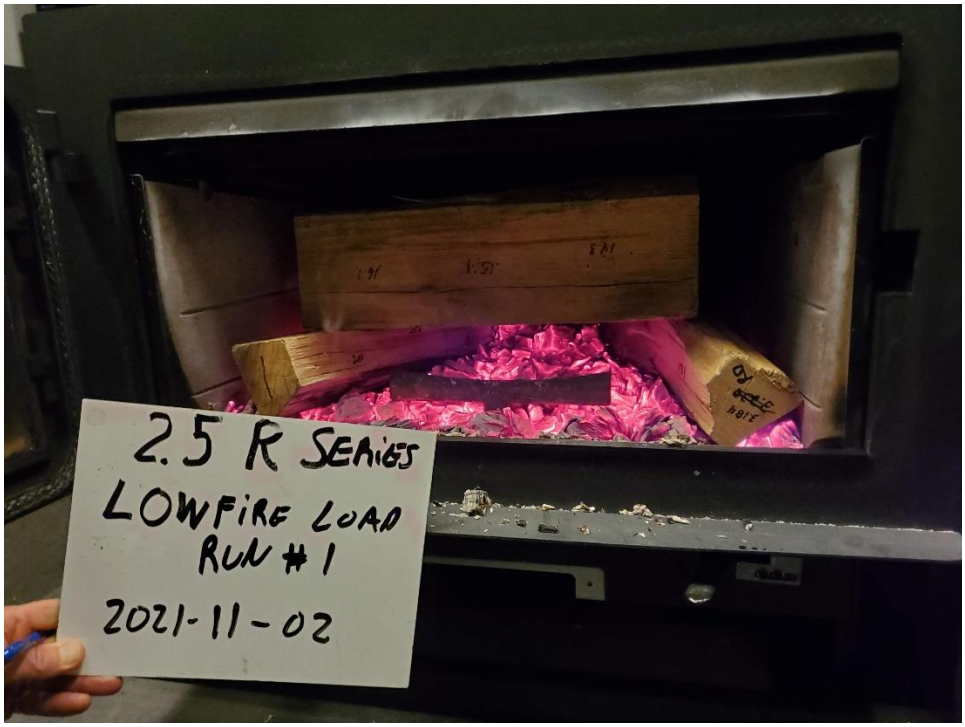

iv. Picture of the coal bed before fuel adjustment at 8:08:21 PM



v. Picture of the coal bed after fuel adjustment at 8:08:34 PM



c. Run #2 High

i. Picture of the kindling and Start-Up fuel



ii. Picture of the load inside of the combustion chamber



iii. Picture of the coal bed before loading the high fire load



iv. High fire load



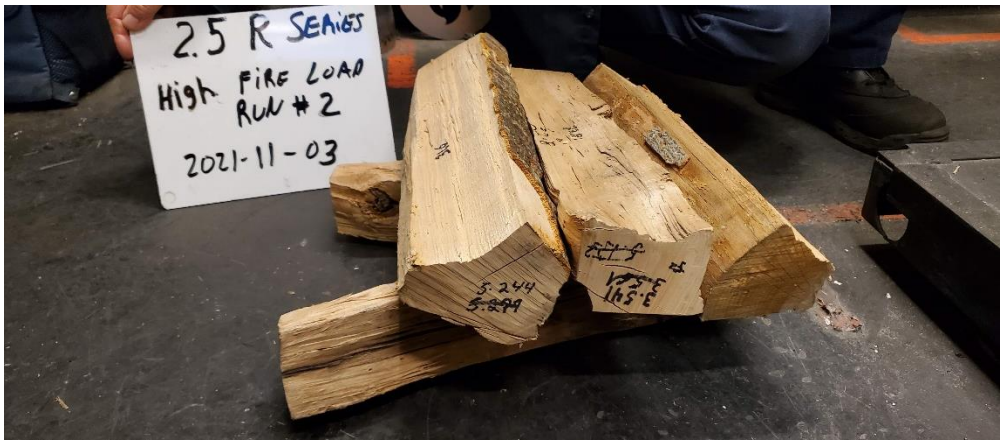

v. High fire load inside the combustion chamber



d. Run #2 - Low

i. Picture of the load

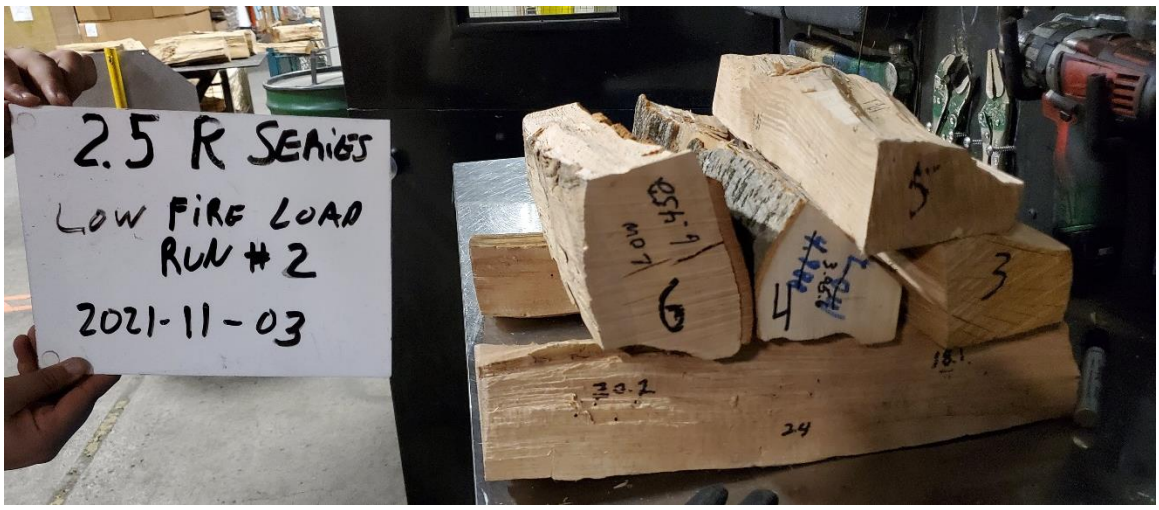



ii. Picture of the coal bed before loading

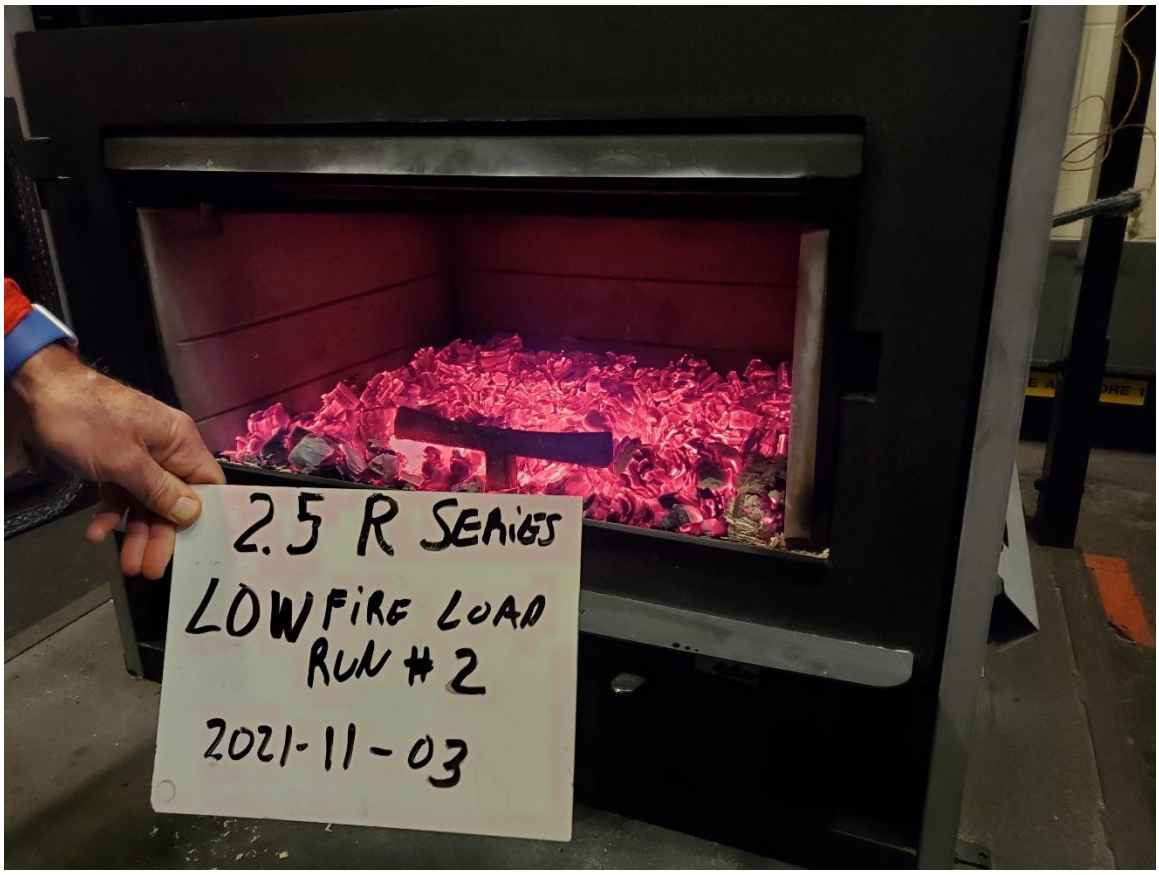

iii. Picture of the load inside the combustion chamber

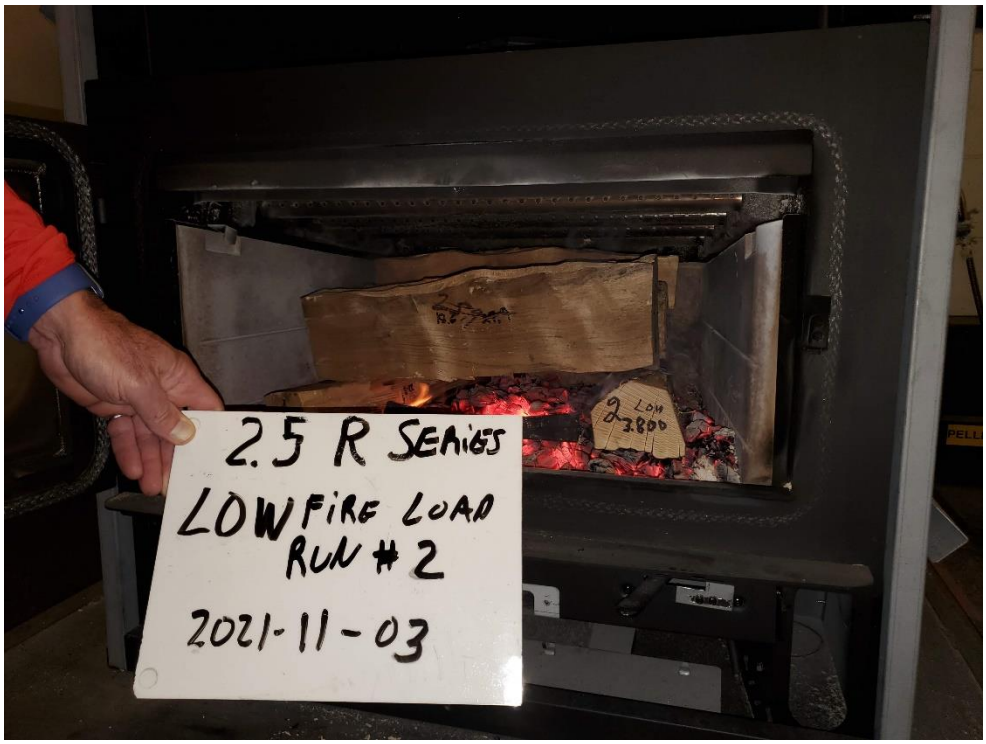

iv. Picture of the coal bed before fuel adjustment at 8:17:42 PM



v. Picture of the coal bed after fuel adjustment at 8:17:59 PM.



e. Run #3 High

i. Picture of the kindling and Start-Up fuel



ii. Picture of the load inside of the combustion chamber

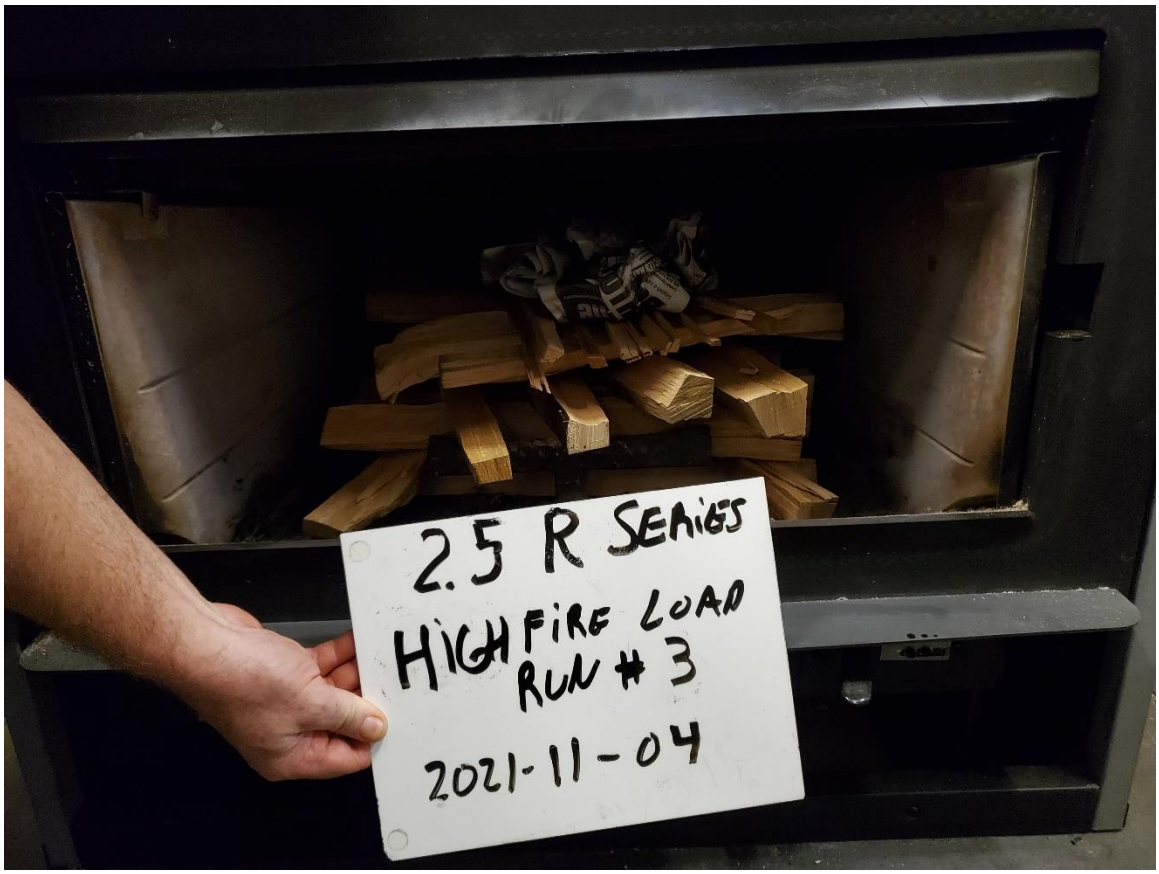

iii. Picture of the coal bed before loading the high fire load



iv. High fire load



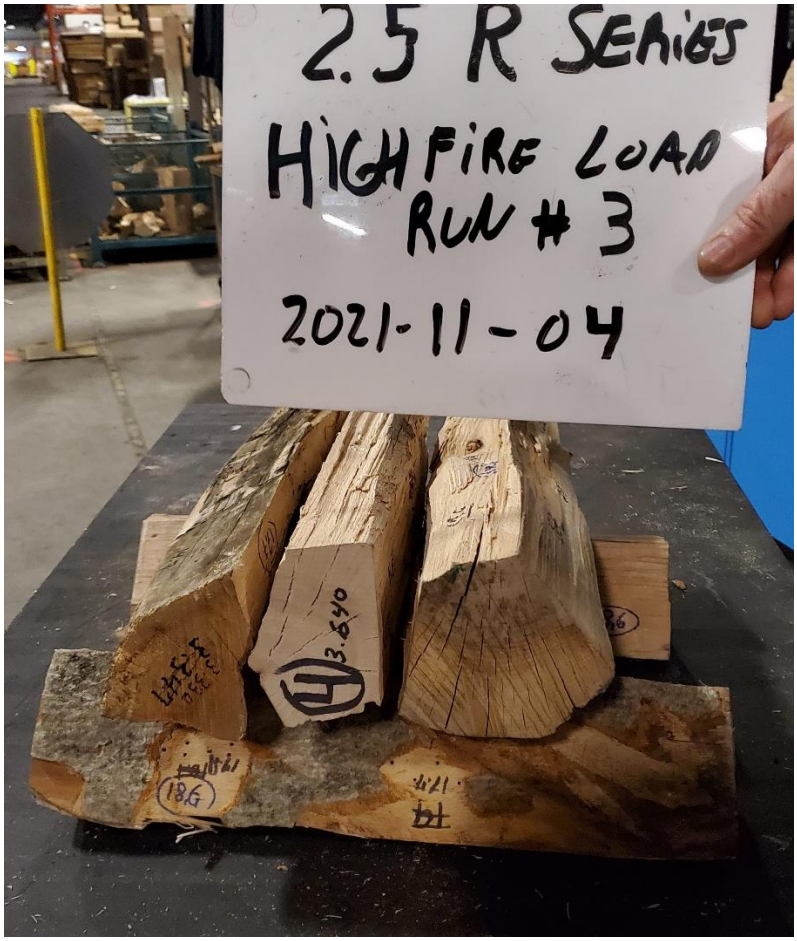

v. High fire load inside the combustion chamber

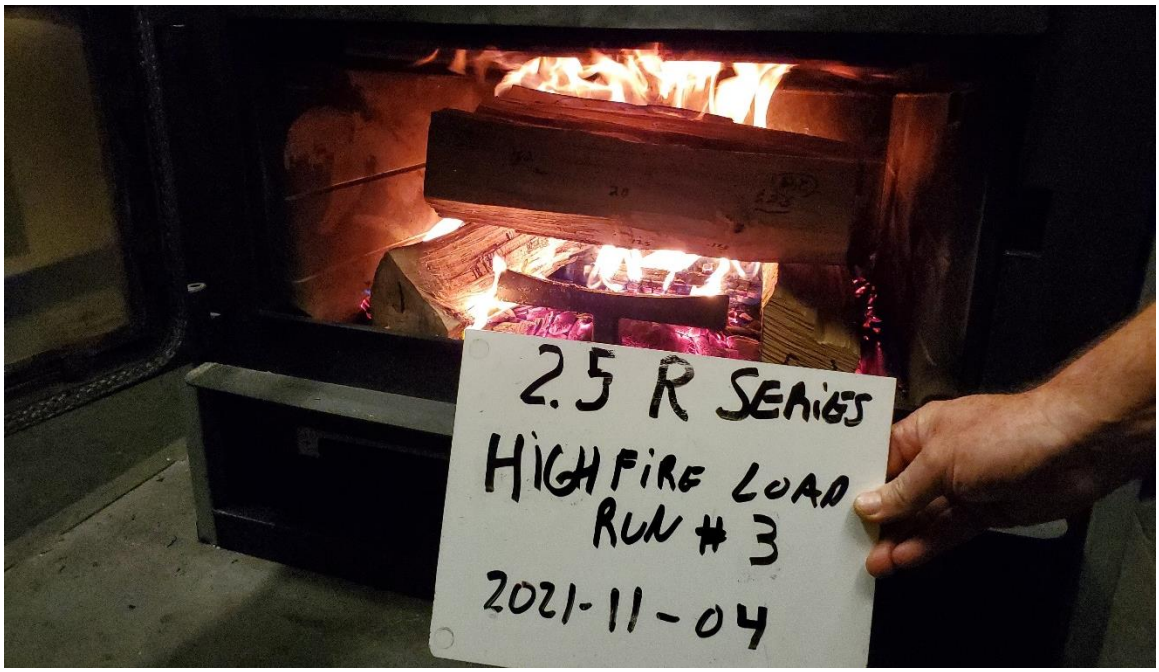

f. Run #3 – Medium (please note that white board says “Low” but the purpose of this test was to perform a “medium” fire)

i. Picture of the load

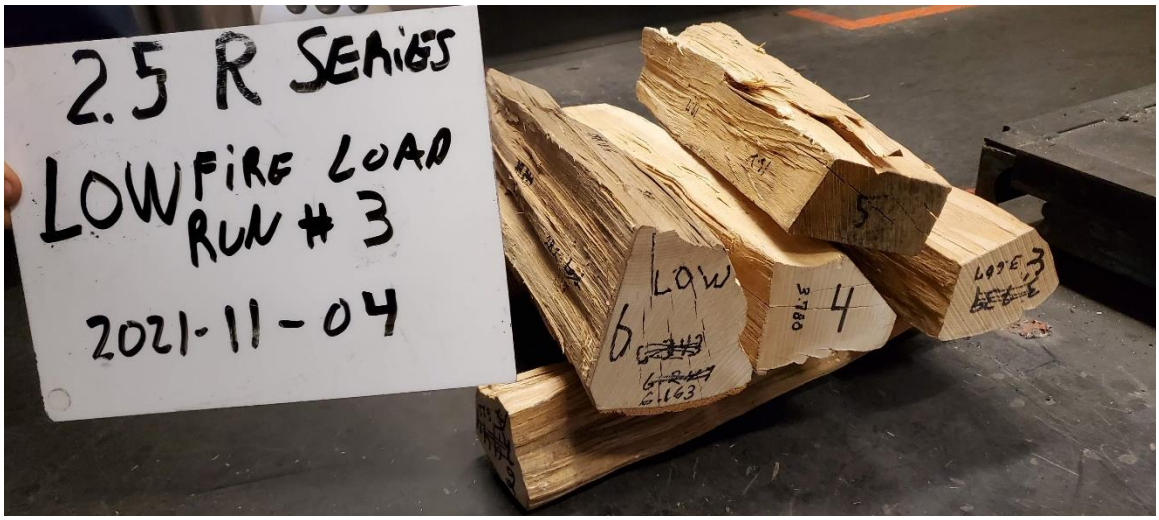



ii. Picture of the coal bed before loading

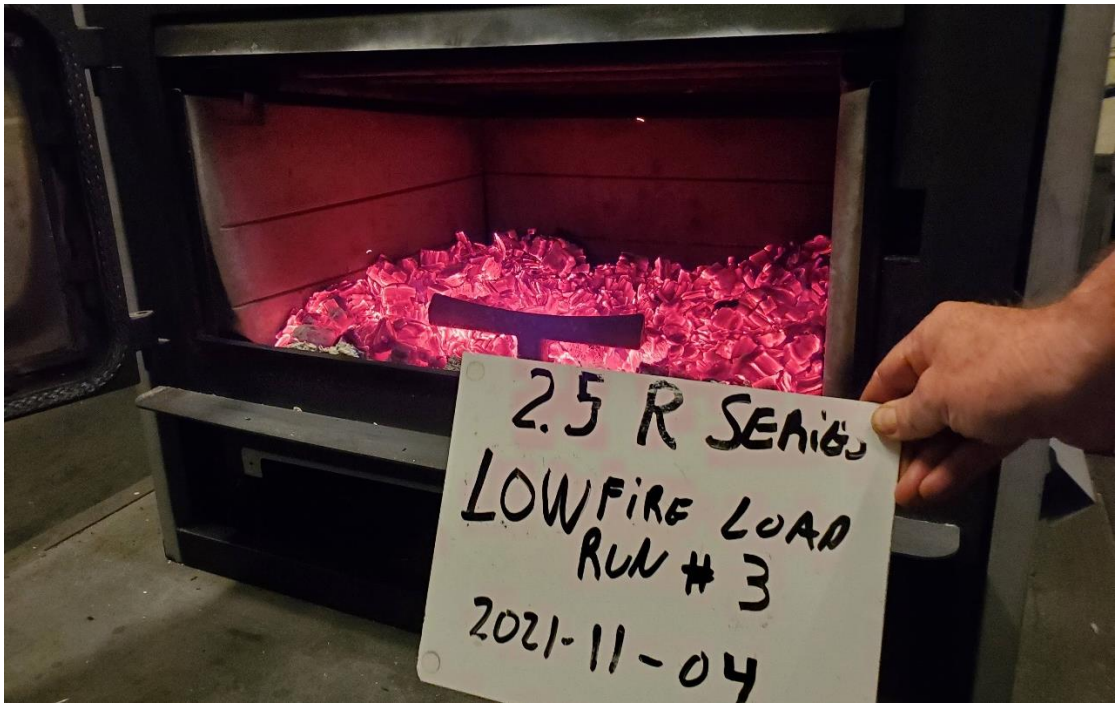

iii. Picture of the load inside the combustion chamber

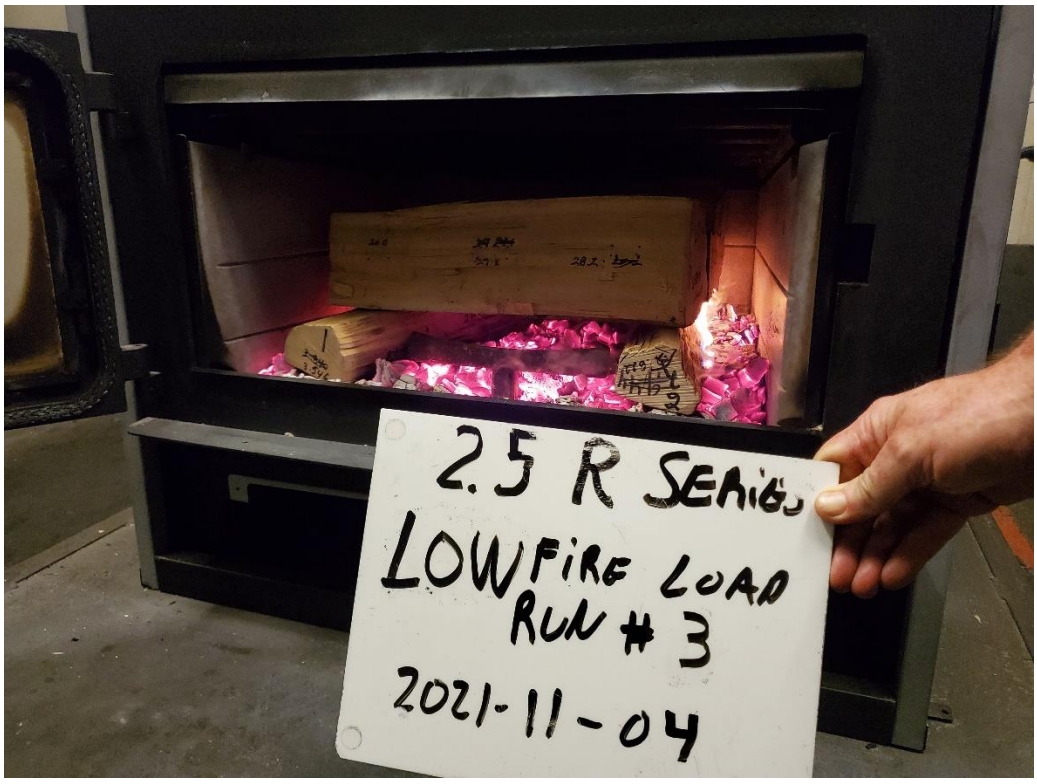

iv. Picture of the coal bed before fuel adjustment at 6:23:48 PM



v. Picture of the coal bed after fuel adjustment at 6:24:12 PM.



4. Picture of the sealed unit

a. Front view



b. Rear View



c. Iso view



United States Environmental Protection Agency

OMB Control No. 2060-0161
Approval expires 03/31/2019

OMB Control No. 2060-0693
Approval expires 03/31/2019

EPA Form 6400-05

Office of Enforcement and Compliance Assurance

30-DAY NOTIFICATION

2015 CLEAN AIR ACT (CAA) STANDARDS OF PERFORMANCE FOR NEW RESIDENTIAL WOOD HEATERS, NEW RESIDENTIAL HYDRONIC HEATERS AND FORCED-AIR FURNACES 40 CFR PART 60 SUBPARTS AAA AND QQQQ

The public reporting and recordkeeping burden for this collection of information is estimated to average 2 hours per response. Send comments on the Agency's need for this information, the accuracy of the provided burden estimates, and any suggested methods for minimizing respondent burden, including through the use of automated collection techniques to the Director, Regulatory Support Division, U.S. Environmental Protection Agency (2822T), 1200 Pennsylvania Ave., NW, Washington, D.C. 20460. Include the OMB control number in any correspondence. Do not send the completed form to this address.

Disclaimer: The statutory provisions and the EPA regulations described in this document contain legally binding requirements. This document is not a substitute for those provisions or regulations, nor is it a regulation itself. In the event of a discrepancy, please refer to 40 CFR PART 60 Subparts AAA AND QQQQ, sections 60.537 and 60.5479. If you have additional questions, please contact Rafael Sanchez at 202-564-7028 or via email at sanchez.rafael@epa.gov.

Instructions: The manufacturer of an affected wood/pellet heater/central heater model line must notify the Administrator of the date that certification testing is scheduled to begin by email to WoodHeaterReports@epa.gov. This notice must be received by the EPA at least 30 days before the start of testing.

GENERAL INFORMATION						
Manufacturer's Name: Stove Builder International						
Heater Type Check one):	☒Adjustable Burn Rate Wood Heater	☐Pellet Stove	☐Single Burn Rate Heater	☐Hydronic Heater	☐Forced Air Furnace	☐Other:
Hydronic Heater Type (Check one):	☐Full Storage	☐Partial Storage	☐Indoor	☐Outdoor	☐Other:	
Forced-Air Furnace Type (Check one):	☐Small (less than 65,000 BTU/hr heat output)		☐Large (greater than 65,000 BTU/hr heat output)			
Fuel Tested (Check one):	☐Crib	☐Pellet	☒Cordwood	☐Wood Chips	☐Other:	
Model Name(s) (as will appear on test report): 2.5R Series						
Model Number(s) (as will appear on test report): To be determined						
Equipped with a catalytic combustor? ☐Yes ☒No						
Mailing Address: Same as street address						

United States Environmental Protection Agency

OMB Control No. 2060-0161
Approval expires 03/31/2019

OMB Control No. 2060-0693
Approval expires 03/31/2019

EPA Form 6400-05

Office of Enforcement and Compliance Assurance

30-DAY NOTIFICATION

2015 CLEAN AIR ACT (CAA) STANDARDS OF PERFORMANCE FOR NEW RESIDENTIAL WOOD HEATERS, NEW RESIDENTIAL HYDRONIC HEATERS AND FORCED-AIR FURNACES 40 CFR PART 60 SUBPARTS AAA AND QQQQ

The public reporting and recordkeeping burden for this collection of information is estimated to average 2 hours per response. Send comments on the Agency's need for this information, the accuracy of the provided burden estimates, and any suggested methods for minimizing respondent burden, including through the use of automated collection techniques to the Director, Regulatory Support Division, U.S. Environmental Protection Agency (2822T), 1200 Pennsylvania Ave., NW, Washington, D.C. 20460. Include the OMB control number in any correspondence. Do not send the completed form to this address.

Disclaimer: The statutory provisions and the EPA regulations described in this document contain legally binding requirements. This document is not a substitute for those provisions or regulations, nor is it a regulation itself. In the event of a discrepancy, please refer to 40 CFR PART 60 Subparts AAA AND QQQQ, sections 60.537 and 60.5479. If you have additional questions, please contact Rafael Sanchez at 202-564-7028 or via email at sanchez.rafael@epa.gov.

Instructions: The manufacturer of an affected wood/pellet heater/central heater model line must notify the Administrator of the date that certification testing is scheduled to begin by email to WoodHeaterReports@epa.gov. This notice must be received by the EPA at least 30 days before the start of testing.

Street Address: 250 rue de Copenhague		
City: Saint-Augustin-de-Desmaures	**State: Québec**	**ZIP Code: G3A 2H3**
Phone:1-418-878-3040 x5224	**Fax: 1-418-878-3001**	**Web Site:** www.sbi-international.com
Address of Manufacturer: **Same as above.**		
City:	**State**	**ZIP Code:**
EPA APPROVED TEST LABORATORY		
Name and Title of Authorized Representative: Claude Pelland, Project Engineer		
Company: Intertek		
Phone: 1-514-631-3100 x277	**E-mail:** **claude.pelland@intertek.com**	**Fax: 1-514-631-1133**
City: Lachine	**State: Québec**	**ZIP Code: H8T 3J1**

United States Environmental Protection Agency

OMB Control No. 2060-0161
Approval expires 03/31/2019

OMB Control No. 2060-0693
Approval expires 03/31/2019

EPA Form 6400-05

Office of Enforcement and Compliance Assurance

30-DAY NOTIFICATION

2015 CLEAN AIR ACT (CAA) STANDARDS OF PERFORMANCE FOR NEW RESIDENTIAL WOOD HEATERS, NEW RESIDENTIAL HYDRONIC HEATERS AND FORCED-AIR FURNACES 40 CFR PART 60 SUBPARTS AAA AND QQQQ

The public reporting and recordkeeping burden for this collection of information is estimated to average 2 hours per response. Send comments on the Agency's need for this information, the accuracy of the provided burden estimates, and any suggested methods for minimizing respondent burden, including through the use of automated collection techniques to the Director, Regulatory Support Division, U.S. Environmental Protection Agency (2822T), 1200 Pennsylvania Ave., NW, Washington, D.C. 20460. Include the OMB control number in any correspondence. Do not send the completed form to this address.

Disclaimer: The statutory provisions and the EPA regulations described in this document contain legally binding requirements. This document is not a substitute for those provisions or regulations, nor is it a regulation itself. In the event of a discrepancy, please refer to 40 CFR PART 60 Subparts AAA AND QQQQ, sections 60.537 and 60.5479. If you have additional questions, please contact Rafael Sanchez at 202-564-7028 or via email at sanchez.rafael@epa.gov.

Instructions: The manufacturer of an affected wood/pellet heater/central heater model line must notify the Administrator of the date that certification testing is scheduled to begin by email to WoodHeaterReports@epa.gov. This notice must be received by the EPA at least 30 days before the start of testing.

EPA APPROVED THIRD-PARTY CERTIFIER		
Name and Title of Authorized Representative: Charles Meyers, Director, Product Certification		
Company: Intertek Testing Services NA, Inc.		
Phone: 312-906-7783	**E-mail: charles.meyers@intertek.com**	**Fax:**
City: Arlington Heights	**State: IL**	**ZIP Code: 60005**
COMPLIANCE TEST INFORMATION		
Test Method(s): ASTM E3053-18 as per SBI request for new ATM dated September 30, 2021		
Date(s) of Proposed Test: November 2, 2021		
Testing Location (Name and Address): Stove Builder International Laboratory 250 rue de Copenhague, Saint-Augustin-de-Desmaures, Québec, Canada, G3A 2H3		
Contact Name: Guillaume Thibodeau-Fortin	**Title: Engineer**	
Phone Number: 1-418-878-3040 x5224	**Email Address:** gthibodeaufortin@sbi-international.com	

United States Environmental Protection Agency

OMB Control No. 2060-0161
Approval expires 03/31/2019

OMB Control No. 2060-0693
Approval expires 03/31/2019

EPA Form 6400-05

Office of Enforcement and Compliance Assurance

30-DAY NOTIFICATION

2015 CLEAN AIR ACT (CAA) STANDARDS OF PERFORMANCE FOR NEW RESIDENTIAL WOOD HEATERS, NEW RESIDENTIAL HYDRONIC HEATERS AND FORCED-AIR FURNACES 40 CFR PART 60 SUBPARTS AAA AND QQQQ

The public reporting and recordkeeping burden for this collection of information is estimated to average 2 hours per response. Send comments on the Agency's need for this information, the accuracy of the provided burden estimates, and any suggested methods for minimizing respondent burden, including through the use of automated collection techniques to the Director, Regulatory Support Division, U.S. Environmental Protection Agency (2822T), 1200 Pennsylvania Ave., NW, Washington, D.C. 20460. Include the OMB control number in any correspondence. Do not send the completed form to this address.

Disclaimer: The statutory provisions and the EPA regulations described in this document contain legally binding requirements. This document is not a substitute for those provisions or regulations, nor is it a regulation itself. In the event of a discrepancy, please refer to 40 CFR PART 60 Subparts AAA AND QQQQ, sections 60.537 and 60.5479. If you have additional questions, please contact Rafael Sanchez at 202-564-7028 or via email at sanchez.rafael@epa.gov.

Instructions: The manufacturer of an affected wood/pellet heater/central heater model line must notify the Administrator of the date that certification testing is scheduled to begin by email to WoodHeaterReports@epa.gov. This notice must be received by the EPA at least 30 days before the start of testing.

Guillaume Thibodeau-Fortin
_____
Print Name and Title of Authorized Official



_____
Signature

09-30-2021
_____
Date

Telephone Number: 1-418-878-3040 x 5224

Email Address: gthibodeaufortin@sbi-international.com

Remarks:

v1

Guillaume Thibodeau-Fortin

De: Guillaume Thibodeau-Fortin
Envoyé: 30 septembre 2021 21:15
À: Sanchez, Rafael; Johnson, Steffan
Cc: WoodHeaterReports; Louis-Pierre Côté; Marc-Antoine Cantin; 'Claude Pelland Intertek'; Hussein Mortada Intertek; Brian Ziegler Intertek
Objet: 30-days notification and ATM request
Pièces jointes: 2.5R_series_30-days-2021-09-30.pdf; 2.5R_series_ATM-Request-2021-09-30.pdf

Dear Mr. Sanchez and Mr. Johnson,
Please accept this following request for a new alternative test method (ATM) along with a 30-days notification for the certification of a new model line name 2.5R Series.

We think that adding this new ATM request to our 30-days notification is feasible and fair due to the consensual discussion HPBA members had with Mr. Johnson on September 29, 2021.

The testing is planned to start on November 2nd, 2021. In order to respect the agreements we have with the testing laboratory, we kindly ask you to confirm the acceptance of this new ATM, with or without additional caveats, before October 18, 2021.

Should you need additional documents or clarification, please let us know.

Guillaume Thibodeau-Fortin, Ing./Eng.

Ingénieur mécanique
Mechanical Engineer

| T : 418-878-3040 ext.5224 |

Guillaume Thibodeau-Fortin

De: Johnson, Steffan <johnson.steffan@epa.gov>
Envoyé: 7 octobre 2021 16:50
À: Guillaume Thibodeau-Fortin
Cc: Sanchez, Rafael
Objet: [EXT] - RE: [EXT] - RE: [EXT] - RE: 30-days notification and ATM request

ATTENTION/CAUTION: Ce message vient de l'extérieur de l'organisation. Ne pas cliquer sur les liens ou ouvrir les attachements sans être certain que le contenu est sécuritaire./ This email originated from outside of the organization. Do not click links or open attachments unless you know the content is safe.

Dear Guillaume,

I can tell you that our work load at the moment is overwhelming, and that I will have to (as I said) brief any request up through my management chain which takes some time to complete.

Given your statement below, I suggest you plan on using Alt-125 for your testing. I simply do not believe we can have this done within the 30 day window.

My best regards,

Stef

Steffan M Johnson | Leader – Measurement Technology Group | US EPA Office of Air Quality Planning and Standards | Air Quality Assessment Division | 109 T.W. Alexander Drive, RTP, NC 27710 | Mail Drop: E-143-02 | Phone: (919) 541-4790 | Cell: (919) 698-5096

(he /him)

From: Guillaume Thibodeau-Fortin <gthibodeaufortin@sbi-international.com>
Sent: Tuesday, October 5, 2021 1:32 PM
To: Sanchez, Rafael <Sanchez.Rafael@epa.gov>
Cc: Johnson, Steffan <johnson.steffan@epa.gov>
Subject: TR: [EXT] - RE: [EXT] - RE: 30-days notification and ATM request

Good afternoon Rafael,
Knowing that it may take more than 30 days for Stef's team to accept this new ATM request, please consider that if we don't receive this letter on time, we will test according to ALT-125.

Thank you very much,

Fabricant de poêles international inc.
Stove Builder International Inc.

Notre passion devient source d'énergie
We Turn passion Into Energy

November 25, 2021

Air Branch/Wood Heater Program Lead
Monitoring, Assistance, and Media Programs Division
Office of Compliance
U.S. EPA
1200 Pennsylvania Ave., NW
MS:2227A
Washington, DC 20004
Attn: EPA Administrator

Subject: Compliance Statements and Acknowledgements for 2.5R Series

Dear Administrator,
As stated in the application for certificate of compliance, Stove Builder International Inc (SBI) states and acknowledges the 13 items below.

1. SBI provided all engineering drawing (including specifications for each component listed in paragraphs (k)(2), (3) and (4) of 60.533(b) and 60.5475(b) available in Intertek Test Report 104845527MTL-001 at Appendix D. Tolerances are identified on all part draft and cannot reasonably be anticipated to cause wood heater in the model line to exceed the applicable emission limits. The user's manual shows how to replace and inspect emission-critical part such as the secondary tubes.
2. SBI confirm that the firebox or any firebox component (including the materials listed in paragraph (k)(3) of 60.533(b) and 60.5475(b) will be composed of material similar from the material used for the firebox or firebox component in the wood heater on which certification testing was performed. Individual brick size and color may vary but the specification of the material remains the same. The inner firebox brick coverage remains also always the same. If other differences occur over time, a description of any such differences and demonstration that any such differences may not reasonably be anticipated to adversely affect emissions or efficiency will be communicate with Residential Wood Heater Compliance Program Lead.
3. SBI will provide to Residential Wood Heater Compliance Program Lead the Confidential Business Information (CBI) report including all test data and drawings by e-mail to Sanchez.Rafael@epa.gov.
4. SBI provided all documentation that proves that the certification tests were valid. Raw data sheets, laboratory technician notes, calculations and test results were provided to Residential Wood Heater Compliance Program Lead in the appendix of Intertek Test Report 104845527MTL-001. SBI confirms that the burn rate for the low burn rate category is no greater than the rate that an operator can achieve in home use and no greater than is advertised by the manufacturer or retailer.
5. SBI provided in Appendix D of Intertek Test Report 104845527MTL-001 a copy of the warranty that stated: "This warranty is void if the unit is used to burn materials other than cordwood (for which the unit is not certified by the EPA) and void if not operated according to the owner's manual. This warranty applies to normal residential use only. Damages caused by misuse, abuse, improper installation, lack of maintenance, over firing, negligence or accident during transportation, power failures, downdrafts, venting problems or under-estimated heating area are not covered by this warranty. The recommended heated area for a given appliance is defined by the manufacturer as its capacity to maintain a minimum

acceptable temperature in the designated area in case of a power failure."

6. SBI, with the help of the certification laboratory, Intertek, built a Quality Assurance Program. A quality control is performed for each unit produced and 4 times a year, Intertek audits our production line to make sure that the models in production comply with the certification unit.
7. SBI confirms that the certification model was sealed by Intertek as per picture of Appendix H. Permanent straps holds the unit on a wooden palette and prevent the door from opening. Intertek logo is painted over the unit and the strap as a protection. The sealed unit will be store at SBI laboratory as long as the unit is in production, but a least for 5 years after certification test.
8. SBI states that the units produce under this certificate will be:
    a. Similar in all material respects that would affect emissions as defined in § 60.531 to the wood heater submitted for certification testing, and labeled as prescribed in § 60.536 and 60.5478.
    b. Accompanied by an owner's manual that meets the requirements in § 60.536 and 60.5478. A copy of the owner's manual was submitted to the Administrator and will be available to the public on the manufacturer's web site at production launch.
9. SBI has entered into contracts with an approved laboratory and third-party certifier which is Intertek. Intertek Montreal is the approved laboratory and the third-party certifier is the Arlington Heights chapter of Intertek.
10. SBI allows the approved laboratory and approved third-party certifier to submit information to Residential Wood Heater Compliance Program Lead on behalf of SBI, including any claimed to be CBI.
11. SBI will place a copy of the certification test report, summary and all non-CBI on the manufacturer's web site available to the public within 30 days after the Administrator issues a certificate of compliance.
12. SBI acknowledges that the certificate of compliance cannot be transferred to another manufacturer or model line without written approval by the Administrator.
13. SBI acknowledges that it is unlawful to sell, distribute or offer to sell or distribute an affected wood heater without a valid certificate of compliance.

Print name and title : Guillaume Thibodeau-Fortin, P.Eng. Laboratory Engineer Date : 2021-11-25

Signature of responsible representative of the manufacturer certifying the accuracy of the above statements:



The authorized or responsible party whose signature is above is certifying that the manufacturer has complied with and will continue to comply with all requirements of the 2015 CAA Standards for compliance certification and that the manufacturer remains responsible for compliance regardless of any error by the test laboratory or third-party certifier.

United States
Environmental Protection
Agency

OMB Control No. 2060-0161
Approval expires 3/31/2019

OMB Control No. 2060-0693
Approval expires 3/31/2019

EPA Form 6400-03

RESIDENTIAL WOOD HEATER CERTIFICATE OF COMPLIANCE APPLICATION

INSTRUCTIONS

Pursuant to the 2015 Clean Air Act Standards of Performance for New Residential Wood Heaters, New Residential Hydronic Heaters and Forced-Air Furnaces, 40 CFR Part 60 Subparts AAA and QQQQ (2015 Wood Heater Rule), any manufacturer of an affected residential wood heater must apply to the EPA for a certificate of compliance for each model line. Without applying for and obtaining a certificate of compliance, a manufacturer may not manufacture, advertise for sale, offer for sale, or sell affected residential wood heaters in the United States.

Under Subpart AAA, affected residential wood-burning room heaters currently include, but are not limited to, adjustable burn rate stoves, catalytic adjustable burn rate stoves; hybrid adjustable burn rate stoves; single burn rate stoves; and pellet stoves.

Under Subpart QQQQ, affected residential wood-burning central heaters currently include, but are not limited to, indoor hydronic heaters ("wood boilers"); outdoor hydronic heaters ("outdoor wood boilers"); and forced-air furnaces ("warm air furnaces").

By completing and submitting this application to EPA, you will satisfy the requirement to apply for a certificate of compliance. To submit a complete application, this application must include the following:

(1) Certification test report prepared by an EPA-approved test laboratory
(2) Certification of conformity by an EPA-approved third party certifier
(3) Quality assurance plan
(4) All required supporting documentation and manufacturer statements pursuant to the 2015 Wood Heater Rule (Sections 60.533 or 60.5475)

This application must be signed by a responsible representative of the manufacturer or an authorized representative. Once completed with all required information/documentation included, this application must be submitted to WoodHeaterReports@epa.gov.

The public reporting and recordkeeping burden for this collection of information is estimated to average 8 hours per response. Send comments on the Agency's need for this information, the accuracy of the provided burden estimates, and any suggested methods for minimizing respondent burden, including through the use of automated collection techniques to the Director, Regulatory Support Division, U.S. Environmental Protection Agency (EPA) (2822T), 1200 Pennsylvania Ave., NW, Washington, D.C. 20460. Include the OMB control number in any correspondence. Do not send the completed application to this address.

Disclaimer: The statutory provisions and the EPA regulations described in this document contain legally binding requirements. This document is not a substitute for those provisions or regulations, nor is it a regulation itself. In the event of a discrepancy, please refer to Part 60 Subparts AAA AND QQQQ, Sections 60.537 and 60.5479. If you have additional questions, please contact Rafael Sanchez at 202-

564-7028, Residential Wood Heater Compliance Program Lead, or via email at sanchez.rafael@epa.gov.

MANUFACTURER INFORMATION

Manufacturer's Name: Stove Builder International

Manufacturer's Physical Address:
250 rue de Copenhague
Saint-Augustin-de-Desmaures,
Canada, G3A 2H3

Manufacturer's Mailing Address (if different from physical address):

Name and Title of Manufacturer's Responsible/Authorized Representative Submitting this Application:
Guillaume Thibodeau-Fortin

Manufacturer's Contact E-mail: gthibodeaufortin@sbi-international.com

Manufacturer's Phone Number: 1-418-878-3040 x5224

Manufacturer's Website Address:
www.sbi-international.com

Manufacturer's Website Address where the test report and owner's manual will be posted, if known:
www.enerzone-intl.com www.osburn-mfg.com
www.valcourtinc.com www.occanada.com
www.empirestove.com
https://www.hearthstonestoves.com/

AFFECTED WOOD HEATER MODEL INFORMATION

Model Name(s) (as appearing on the certification test report). Please note: the model name and design number must clearly distinguish one model from another. The name and design number cannot include the EPA symbol or logo or name or derivatives such as "EPA": 2.5R Series

Model Number(s) (as appearing on the certification test report): Solution 2.5 ZC II, Stratford II, FP10 Lafayette II, FP10 Lafayette IIS, FP12 Mundo II, HE250R, Destination 2.7, Matrix 2700, WFP-75 8411, HE275CF, HE275, Green Mountain Insert 90 8460 and St. Clair 2500

Heater Type Check one):	☒Adjustable Burn Rate Wood Stover	☐Pellet Stove	☐Single Burn Rate Wood Stove	☐Hydronic Heater	☐Forced-Air Furnace (FAF)
Hydronic Heater Type (Check one):	☐Full Storage	☐Partial Storage	☐Indoor	☐Outdoor	
Forced-Air Furnace Type (Check one):	☐Small (less than 65,000 BTU/hr heat output)		☐Large (greater than 65,000 BTU/hr heat output)		
Fuel Tested (Check one):	☐Crib	☐Pellet	☒Cordwood	☐Wood Chips	☐Other:
Certification Step:	☐2015 / ☐2016 (FAFs only)	☐2017 (FAFs only)	☒2020 (ALL HEATERS)		

Was this heater tested using an EPA-approved Alternative Test Method (ATM)? ☒Yes ☐No

If yes, provide date of EPA approval and attach copy of EPA approved ATM letter):
2/28/2018

If not, what Test Method(s) did the test laboratory use for the certification test? (List all applicable test methods):

Heater equipped with a catalytic combustor? ☐Yes ☒No

Date of submission of 30-Day Notice to the EPA:9/30/2021

What was the proposed date(s) of testing? 11/02/2021

What was the actual date(s) of testing? 11/02/2021

Was the compliance test postponed or suspended? ☐Y ☒N If yes, date of EPA notification of postponement or suspension:

Explain reason for postponing or suspending the certification test:

EPA-APPROVED TEST LABORATORY

Name of EPA-Approved Test Laboratory: Intertek

Name(s) of Person(s) Authorized and/or Responsible for Conducting Certification Test: Claude Pelland, P. Eng.

Position/Title: Project Engineer

Address: 1829, 32nd avenue

City: Lachine	**State: Québec**	**ZIP Code: H8T 3J1**
Phone: 1-514-631-3100 x277	**Email: claude.pellant@intertek.com**	

EPA-APPROVED THIRD PARTY CERTIFIER

Name of EPA-Approved Third-Party Certifier: Intertek

Name(s) of Person(s) Authorized and/or Responsible for Reviewing Test Report and/or Issuing Certification of Conformity: Charles Meyers

Position/Title: Director, Product Certification

Address: 545 E Algonquin Rd

City: Arlington Heights	**State: IL**	**ZIP Code: 60005**
Phone: 312-906-7783	**Email: charles.meyers@intertek.com**	

REQUIRED SUPPORTING DOCUMENTATION/MANUFACTURER STATEMENTS

NOTE: TO COMPLETE THIS APPLICATION, ALL REQUIRED DOCUMENTATION AND MANUFACTURER STATEMENTS MUST ACCOMPANY THIS APPLICATION.

1. Engineering Drawings

Engineering drawings and specifications of components that may affect emissions (including specifications for each component listed in paragraphs (k)(2), (3) and (4) of 60.533(b) and 60.5475(b). Manufacturers may use assembly or design drawings that have been prepared for other purposes, but must designate on the drawings the dimensions of each component listed in paragraph (k) of this section. Manufacturers must identify tolerances of components listed in paragraph (k)(2) of 60.533(b) and 60.5475(b) that are different from those specified in that paragraph, and show that such tolerances cannot reasonably be anticipated to cause wood heaters in the model line to exceed the applicable emission limits. The drawings must identify how the emission-critical parts, such as air tubes and catalyst, can be readily inspected and replaced.

2. Firebox Statement Requirement

A statement whether the firebox or any firebox component (including the materials listed in paragraph (k)(3) of 60.533(b) and 60.5475(b) will be composed of material different from the material used for the firebox or firebox component in the wood heater on which certification testing was performed, a description of any such differences and demonstration that any such differences may not reasonably be anticipated to adversely affect emissions or efficiency.

3. Confidential Business Information

Clear identification of any claimed confidential business information (CBI). Submit such information under separate cover to the EPA CBI Office; Attn: Residential Wood Heater Compliance Program Lead, 1200 Pennsylvania Ave., NW, Room 7149-D, MS:2227A, Washington, DC 20460. **Note that all emissions data, including all information necessary to determine emission rates in the format of the standard, cannot be claimed as CBI.**

4. All Documentation Pertaining to a Valid Certification Test

All documentation pertaining to a valid certification test **i**ncluding the complete test report and, for all test runs: Raw data sheets, laboratory technician notes, calculations and test results. Documentation must include the items specified in the applicable test methods. Documentation must include discussion of each test run and its appropriateness and validity, and must include detailed discussion of all anomalies, whether all burn rate categories were achieved, any data not used in the calculations and, for any test runs not completed, the data collected during the test run and the reason(s) that the test run was not completed and why. The burn rate for the low burn rate category must be no greater than the rate that an operator can achieve in home use and no greater than is advertised by the manufacturer or retailer. The test report must include a summary table that clearly presents the individual and overall emission rates, efficiencies and heat outputs. Submit the test report and all associated required information, according to the procedures for electronic reporting specified in § 60.537(f) and 60.5475(f).

5. Warranties

A copy of the warranties for the model line, which must include a statement that the warranties are void if the unit is used to burn materials for which the unit is not certified by the EPA and void if not operated according to the owner's manual.

6. Quality Assurance Program Statement

A statement that the manufacturer will conduct a quality assurance program for the model line that satisfies the requirements of § 60.533(m).

7. Laboratory Sealing of Unit

A statement describing how the tested unit was sealed by the laboratory after the completion of certification testing and asserting that such unit will be stored by the manufacturer in the sealed state until 5 years after the certification test.

8. Statements that the Wood Heaters Manufactured under this Certificate will be:

(i) Similar in all material respects that would affect emissions as defined in § 60.531 to the wood heater submitted for certification testing, and

(ii) Labeled as prescribed in § 60.536 and 60.5478, and

(iii) Accompanied by an owner's manual that meets the requirements in § 60.536 and 60.5478. In addition, a copy of the owner's manual must be submitted to the EPA and be available to the public on the manufacturer's web site.

9. Third Party Certification Statement

A statement that the manufacturer has entered into contracts with an approved laboratory and an approved third-party certifier that satisfy the requirements of § 60.533(f).

10. Approved Laboratory/Third Party Statement

A statement that the approved laboratory and approved third-party certifier are allowed to submit information on behalf of the manufacturer, including any claimed to be CBI.

11. Manufacturer's Website Certification Test Reports Availability Statement

A statement that the manufacturer will place a copy of the certification test report and summary on the manufacturer's web site available to the public within 30 days after the EPA issues a certificate of compliance.

12. Transferability Acknowledgement Statement

A statement of acknowledgment that the certificate of compliance cannot be transferred to another manufacturer or model line without written approval by the EPA.

13. Statement about Selling Wood Heaters without an EPA Certificate

A statement acknowledging that it is unlawful to sell, distribute or offer to sell or distribute an affected wood heater without a valid certificate of compliance.

PLEASE ACKNOWLEDGE THAT ALL REQUIRED SUPPORTING DOCUMENTATION AND MANUFACTURER STATEMENTS ACCOMPANY THIS APPLICATION.

Initials GTF

SIGNATURE OF RESPONSIBLE OFFICER OR AUTHORIZED REPRESENTATIVE OF THE MANUFACTURER CERTIFYING THE ACCURACY AND COMPLETENESS OF THIS APPLICATION:

Signature:



Print Name: Guillaume Thibodeau-Fortin, P. Eng.

Title: Laboratory Engineer

Date: 2021-11-25

The responsible officer or authorized representative of the manufacturer whose signature is above is certifying that the manufacturer has complied with all requirements of the 2015 Wood Heater Rule for compliance certification and will continue to do so. The manufacturer remains responsible for compliance regardless of any error by the EPA-approved test laboratory or third-party certifier.