Wood Insert Owner's Manual

Part 2 of 2

INSTALLATION AND OPERATION REQUIREMENTS

HEI90

(VB00024 model)

ENGLISH

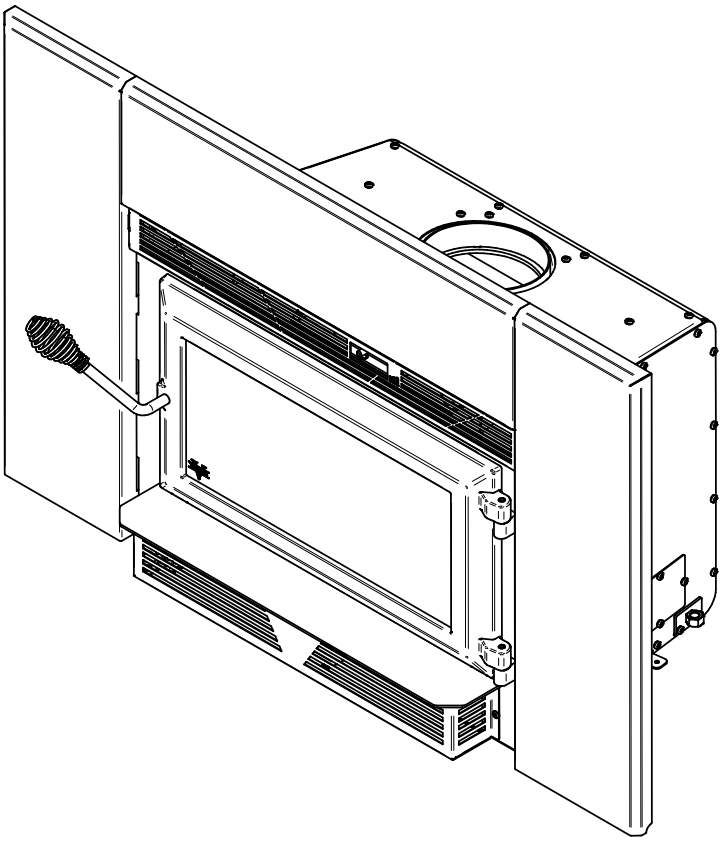

Safety tested according to CAN/ULC 628, UL 1482 and UL 737 by an accredited laboratory.

US Environmental Protection Agency phase II certified wood insert compliant with 2020 cord wood standard.

EPA ≤2.5 g/h

CONTACT LOCAL BUILDING OR FIRE OFFICIALS ABOUT RESTRICTIONS AND INSTALLATION INSPECTION REQUIREMENTS IN THE AREA.

READ THIS ENTIRE MANUAL BEFORE INSTALLATION AND USE OF THIS WOOD INSERT. FAILURE TO FOLLOW THESE INSTRUCTIONS COULD RESULT IN PROPERTY DAMAGE, BODILY INJURY OR EVEN DEATH.

READ AND KEEP THIS MANUAL FOR REFERENCE

2026-03-03

Printed in Canada

46342_IA

ONLINE WARRANTY REGISTRATION

If the unit requires repairs during the warranty period, proof of purchase must be provided. The purchase invoice must be kept. The date indicated on it establishes the warranty period. If it can not be provided, the warranty period will be determined by the date of manufacture of the product. It is also highly recommended to register the warranty online at

http://www.occanada.com/en/service-support/warranty/warranty-registration

Registering the warranty will help to quickly find the information needed on the unit.

Dealer: _____

_____

Installer: _____

_____

Phone Number: _____

Serial Number: _____

TABLE OF CONTENTS

1. Certification Plate 4

2. General Information 5

2.1 Performances 5
2.2 Specifications 6
2.3 Dimensions 7
2.4 EPA Loading Procedure 9

3. Clearances to Combustible Material 10

3.1 Minimum Masonry Opening and Clearances to Combustibles 10
3.2 Floor Protection 11
3.3 R Value 11

4. Installing Options on Your Product and Replacing Parts 13

4.1 Replacement and Adjustment 13
4.2 Removal of Refractory Stones 16
4.3 Connecting the Blower With a BX Wire 17
4.4 Changing the Side of the Blower Power Cord 20
4.5 Blower Removal 23
4.6 Removable Air Control Handle 24
4.7 Faceplate Installation 25
4.8 Faceplate Decorative Panel Installation/Removal 26
4.9 Optional Fresh Air Intake Kit Installation 27
4.10 Optional Fire Screen Installation 28
4.11 Air Tubes and Baffle Installation 29
4.12 Removal Instructions 32
4.13 Exploded Diagram and Parts List 33

VENTIS LIMITED LIFETIME WARRANTY 36

ENGLISH

1. Certification Plate

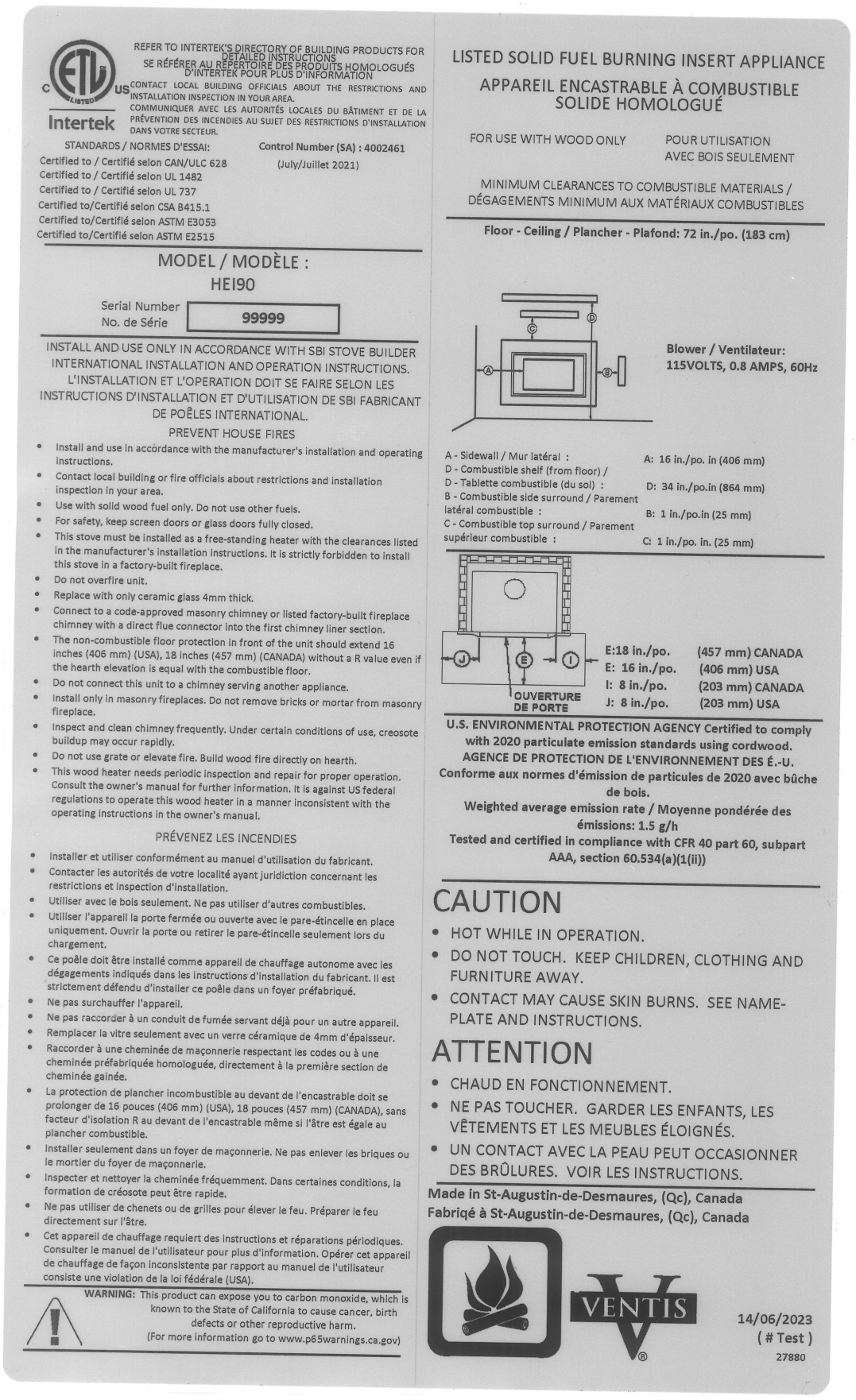

Intertek

REFER TO INTERTEK'S DIRECTORY OF BUILDING PRODUCTS FOR DETAILED INSTRUCTIONS
SE RÉFÉRER AU RÉPERTOIRE DES PRODUITS HOMOLOGUÉS D'INTERTEK POUR PLUS D'INFORMATION

CONTACT LOCAL BUILDING OFFICIALS ABOUT THE RESTRICTIONS AND INSTALLATION INSPECTION IN YOUR AREA.
COMMUNIQUER AVEC LES AUTORITÉS LOCALES DU BÂTIMENT ET DE LA PRÉVENTION DES INCENDIES AU SUJET DES RESTRICTIONS D'INSTALLATION DANS VOTRE SECTEUR.

STANDARDS / NORMES D'ESSAI:
Certified to / Certifié selon CAN/ULC 628
Certified to / Certifié selon UL 1482
Certified to / Certifié selon UL 737
Certified to/Certifié selon CSA B415.1
Certified to/Certifié selon ASTM E3053
Certified to/Certifié selon ASTM E2515

Control Number (SA) : 4002461
(July/Juillet 2021)

MODEL / MODÈLE :
HEI90

Serial Number
No. de Série
99999

INSTALL AND USE ONLY IN ACCORDANCE WITH SBI STOVE BUILDER INTERNATIONAL INSTALLATION AND OPERATION INSTRUCTIONS.
L'INSTALLATION ET L'OPERATION DOIT SE FAIRE SELON LES INSTRUCTIONS D'INSTALLATION ET D'UTILISATION DE SBI FABRICANT DE POÊLES INTERNATIONAL.

PREVENT HOUSE FIRES

- Install and use in accordance with the manufacturer's installation and operating instructions.
- Contact local building or fire officials about restrictions and installation inspection in your area.
- Use with solid wood fuel only. Do not use other fuels.
- For safety, keep screen doors or glass doors fully closed.
- This stove must be installed as a free-standing heater with the clearances listed in the manufacturer's installation instructions. It is strictly forbidden to install this stove in a factory-built fireplace.
- Do not overfire unit.
- Replace with only ceramic glass 4mm thick.
- Connect to a code-approved masonry chimney or listed factory-built fireplace chimney with a direct flue connector into the first chimney liner section.
- The non-combustible floor protection in front of the unit should extend 16 inches (406 mm) (USA), 18 inches (457 mm) (CANADA) without a R value even if the hearth elevation is equal with the combustible floor.
- Do not connect this unit to a chimney serving another appliance.
- Install only in masonry fireplaces. Do not remove bricks or mortar from masonry fireplace.
- Inspect and clean chimney frequently. Under certain conditions of use, creosote buildup may occur rapidly.
- Do not use grate or elevate fire. Build wood fire directly on hearth.
- This wood heater needs periodic inspection and repair for proper operation. Consult the owner's manual for further information. It is against US federal regulations to operate this wood heater in a manner inconsistent with the operating instructions in the owner's manual.

PRÉVENEZ LES INCENDIES

- Installer et utiliser conformément au manuel d'utilisation du fabricant.
- Contacter les autorités de votre localité ayant juridiction concernant les restrictions et inspection d'installation.
- Utiliser avec le bois seulement. Ne pas utiliser d'autres combustibles.
- Utiliser l'appareil la porte fermée ou ouverte avec le pare-étincelle en place uniquement. Ouvrir la porte ou retirer le pare-étincelle seulement lors du chargement.
- Ce poêle doit être installé comme appareil de chauffage autonome avec les dégagements indiqués dans les instructions d'installation du fabricant. Il est strictement défendu d'installer ce poêle dans un foyer préfabriqué.
- Ne pas surchauffer l'appareil.
- Ne pas raccorder à un conduit de fumée servant déjà pour un autre appareil.
- Remplacer la vitre seulement avec un verre céramique de 4mm d'épaisseur.
- Raccorder à une cheminée de maçonnerie respectant les codes ou à une cheminée préfabriquée homologuée, directement à la première section de cheminée gainée.
- La protection de plancher incombustible au devant de l'encastrable doit se prolonger de 16 pouces (406 mm) (USA), 18 pouces (457 mm) (CANADA), sans facteur d'isolation R au devant de l'encastrable même si l'âtre est égale au plancher combustible.
- Installer seulement dans un foyer de maçonnerie. Ne pas enlever les briques ou le mortier du foyer de maçonnerie.
- Inspecter et nettoyer la cheminée fréquemment. Dans certaines conditions, la formation de créosote peut être rapide.
- Ne pas utiliser de chenets ou de grilles pour élever le feu. Préparer le feu directement sur l'âtre.
- Cet appareil de chauffage requiert des instructions et réparations périodiques. Consulter le manuel de l'utilisateur pour plus d'information. Opérer cet appareil de chauffage de façon inconsistente par rapport au manuel de l'utilisateur consiste une violation de la loi fédérale (USA).

WARNING: This product can expose you to carbon monoxide, which is known to the State of California to cause cancer, birth defects or other reproductive harm.
(For more information go to www.p65warnings.ca.gov)

LISTED SOLID FUEL BURNING INSERT APPLIANCE

APPAREIL ENCASTRABLE À COMBUSTIBLE SOLIDE HOMOLOGUÉ

FOR USE WITH WOOD ONLY

POUR UTILISATION AVEC BOIS SEULEMENT

MINIMUM CLEARANCES TO COMBUSTIBLE MATERIALS / DÉGAGEMENTS MINIMUM AUX MATÉRIAUX COMBUSTIBLES

Floor - Ceiling / Plancher - Plafond: 72 in./po. (183 cm)

Blower / Ventilateur: 115VOLTS, 0.8 AMPS, 60Hz

A - Sidewall / Mur latéral : A: 16 in./po. in (406 mm)
D - Combustible shelf (from floor) / D - Tablette combustible (du sol) : D: 34 in./po.in (864 mm)
B - Combustible side surround / Parement latéral combustible : B: 1 in./po.in (25 mm)
C - Combustible top surround / Parement supérieur combustible : C: 1 in./po. in. (25 mm)

OUVERTURE DE PORTE

E:18 in./po. (457 mm) CANADA
E: 16 in./po. (406 mm) USA
I: 8 in./po. (203 mm) CANADA
J: 8 in./po. (203 mm) USA

U.S. ENVIRONMENTAL PROTECTION AGENCY Certified to comply with 2020 particulate emission standards using cordwood.
AGENCE DE PROTECTION DE L'ENVIRONNEMENT DES É.-U. Conforme aux normes d'émission de particules de 2020 avec bûche de bois.
Weighted average emission rate / Moyenne pondérée des émissions: 1.5 g/h
Tested and certified in compliance with CFR 40 part 60, subpart AAA, section 60.534(a)(1(ii))

CAUTION

- HOT WHILE IN OPERATION.
- DO NOT TOUCH. KEEP CHILDREN, CLOTHING AND FURNITURE AWAY.
- CONTACT MAY CAUSE SKIN BURNS. SEE NAME-PLATE AND INSTRUCTIONS.

ATTENTION

- CHAUD EN FONCTIONNEMENT.
- NE PAS TOUCHER. GARDER LES ENFANTS, LES VÊTEMENTS ET LES MEUBLES ÉLOIGNÉS.
- UN CONTACT AVEC LA PEAU PEUT OCCASIONNER DES BRÛLURES. VOIR LES INSTRUCTIONS.

Made in St-Augustin-de-Desmaures, (Qc), Canada
Fabriqé à St-Augustin-de-Desmaures, (Qc), Canada

VENTIS

14/06/2023
(# Test)
27880

ENGLISH

2. General Information

2.1 Performances

Values are as measured per test method, except for the recommended heating area, firebox volume, maximum burn time and maximum heat output.

Model	HEI90 (VB00024)	
Type of combustion	Non-catalytic	
Fuel Type	Dry Cordwood	
Recommended heating area (sq. ft.)[1]	250 to 1,500 ft^2 (23 to 139 m^2)	
Overall firebox volume[2]	1.1 ft^3 (0.031 m^3)	
EPA loading volume	1.03 ft^3 (0.0292 m^3)	
Maximum burn time[1]	7 hours	
Maximum heat output (dry cordwood)[3]	45,000 BTU/h (13.2 kW)	
Overall heat output rate (min. to max.)[2 4]	8,471 BTU/h to 31,700 BTU/h (2.48 kW to 9.29 kW)	
Average overall efficiency[3] (Dry cordwood)	75 % (HHV)[5]	80 % (LHV)[6]
Optimum overall efficiency[7]	82 %	
Optimum heat transfer efficiency[8]	78 %	
Average particulate emissions rate[9]	1.5 g/h (EPA / CSA B415.1-10)[10]	
Average CO[11]	34 g/h	

ENGLISH

[1] Recommended heating area and maximum burn time may vary subject to location in home, chimney draft,heat loss factors, climate, fuel type and other variables. The recommended heated area for a given appliance is defined by the manufacturer as its capacity to maintain a minimum acceptable temperature in the designated area in case of a power failure.
[2] The overall firebox calculation is an approximation and is not intended to be used for loading. This volume includes a buffer zone to allow an easier fuel insertion, prevent ash spillage and allow the air wash to work properly.
[3] The maximum heat output (dry cordwood) is based on a loading density varying between 15 lb/ft^3 and 20 lb/ft^3. Other performances are based on a fuel load prescribed by the standard. The specified loading density varies between 7 lb/ft^3 and 12 lb/ft^3. The moisture content is between 19% and 25%.
[4] As measured per CSA B415.1-10 stack loss method.
[5] Higher Heating Value of the fuel.
[6] Lower Heating Value of the fuel.
[7] Optimum overall efficiency at a specific burn rate (LHV).
[8] The optimum heat transfer efficiency is for the low burn rate and represents the appliance's ability to convert the energy contained in the wood logs into energy transferred to the room in the form of heat and does not take into account the chemical losses during combustion.
[9] This appliance is officially tested and certified by an independent agency.
[10] Tested and certified in compliance with CFR 40 part 60, subpart AAA, section 60.534(a)(1(ii) and ASTM E3053-17 based on the ALT-125 send by EPA on February 28th, 2018.
[11] Carbon monoxide.

2.2 Specifications

Recommended log length	16 in (406 mm) east-west
Maximum log length[1]	17 in (432 mm) east-west
Flue outlet diameter	6 in (150 mm)
Recommended connector pipe diameter	6 in (150 mm)
Type of chimney	ULC S635, CAN/ULC-S640, UL 1777
Minimum liner height	12 feet
Baffle material	Vermiculite
Approved for alcove installation	No
Approved for mobile home installation[2]	No
Type of door	Simple, glazed, with cast iron frame
Type of glass	Ceramic glass
Blower	Included (up to 90 CFM)
Particulate emission standard[3]	EPA / CSA B415.1-10
USA Standard (Safety)	UL 1482, UL 737
Canada Standard (Safety)	CAN/ULC 628

ENGLISH

[1] North-south: ends of the logs visible, East-west: sides of the logs visible.

[2] Mobile homes (Canada) or manufactured homes (USA): The US Department of Housing and Urban Development describes “manufactured homes” better known as “mobile homes” as follows; buildings built on fixed wheels and those transported on temporary wheels/axles and set on a permanent foundation. In Canada, a mobile home is a dwelling for which the manufacture and assembly of each component is completed or substantially completed prior to being moved to a site for installation on a foundation and connection to service facilities and which conforms to the CAN/CSAZ240 MH standard.

[3] Tested and certified in compliance with CFR 40 part 60, subpart AAA, section 60.534(a)(1(ii) and ASTM E3053-17 based on the ALT-125 send by EPA on February 28th, 2018.

2.3 Dimensions

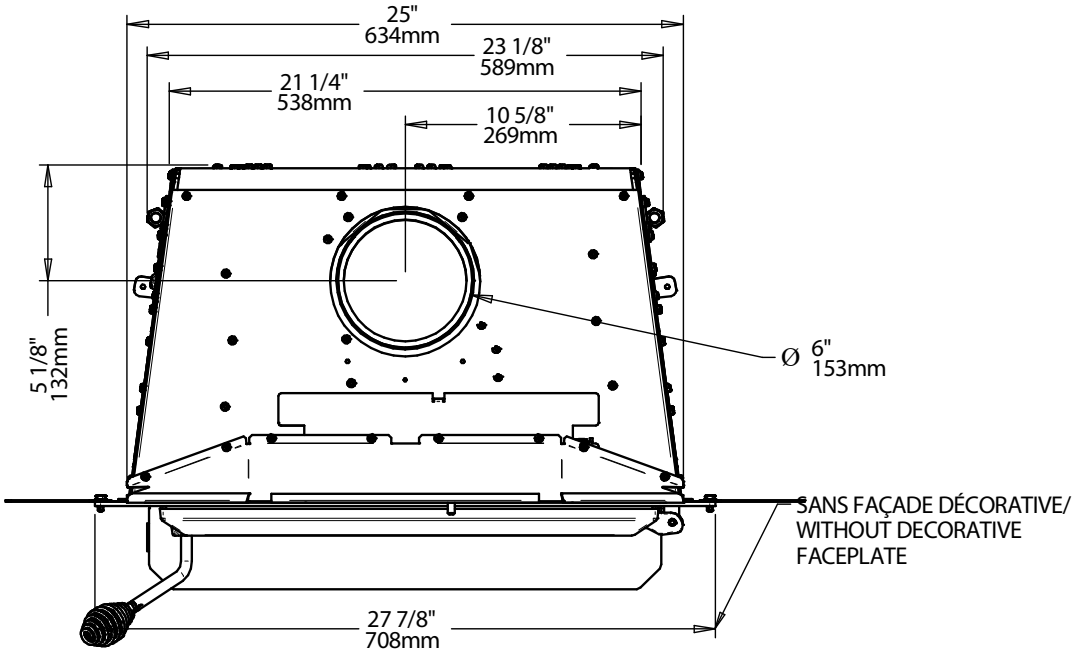

Figure 1 : Top View

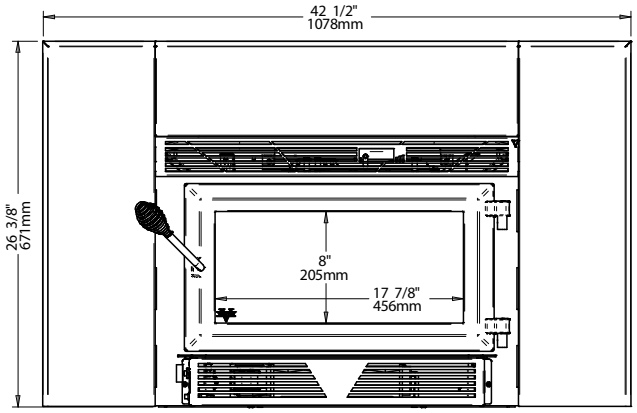

Figure 2 : Front View

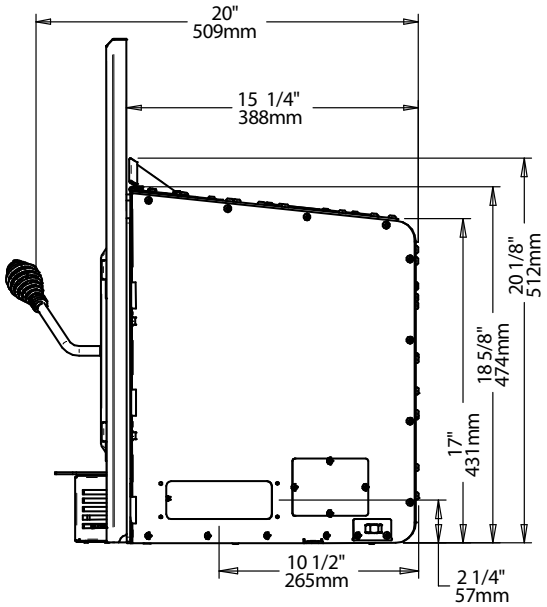

Figure 3 : Side View - Maximum Insert Projection

ENGLISH

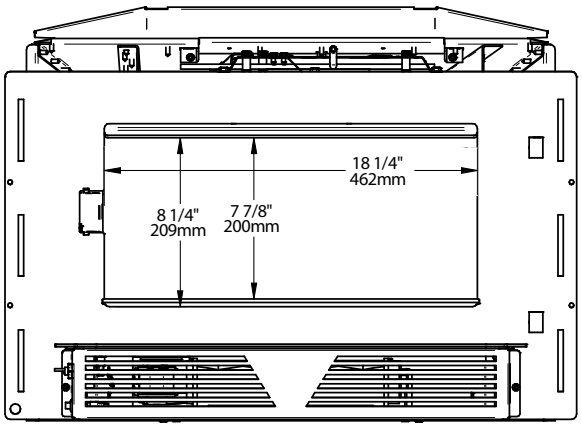

Figure 4 : Door Opening

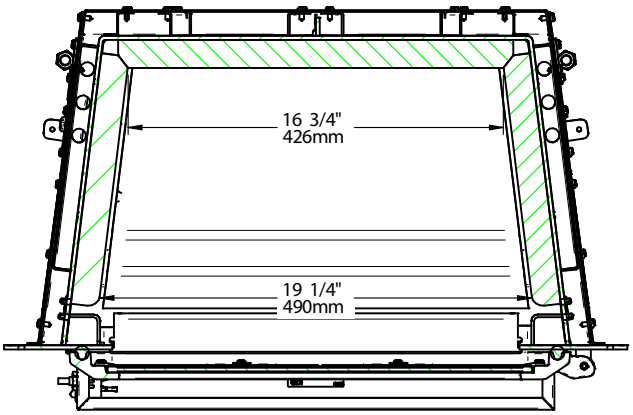

Figure 5 : Top View - Combustion Chamber

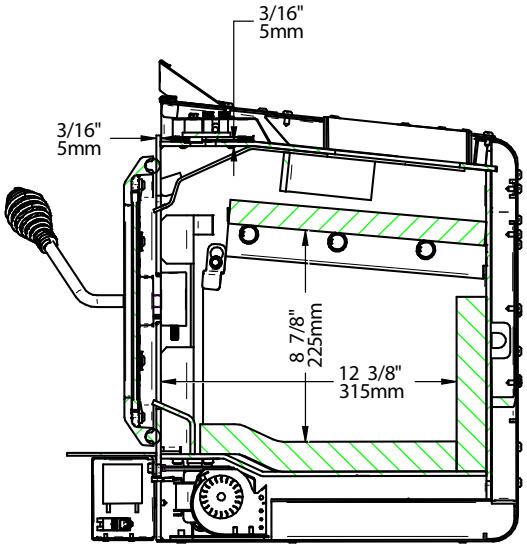

Figure 6 : Side View - Combustion Chamber

2.4 EPA Loading Procedure

The loading methods shown below are those that were used during emissions certification.

2.4.1 Air control

The air control is located above the door. To open the air control, insert the removable handle onto the air control and push the air control handle completely to the right (High). This will increase the burn rate. To close the air control, push the air control handle completely to the left (Low). This will decrease the burn rate. **Do not leave the handle on the air control after use, as it will get very hot.**

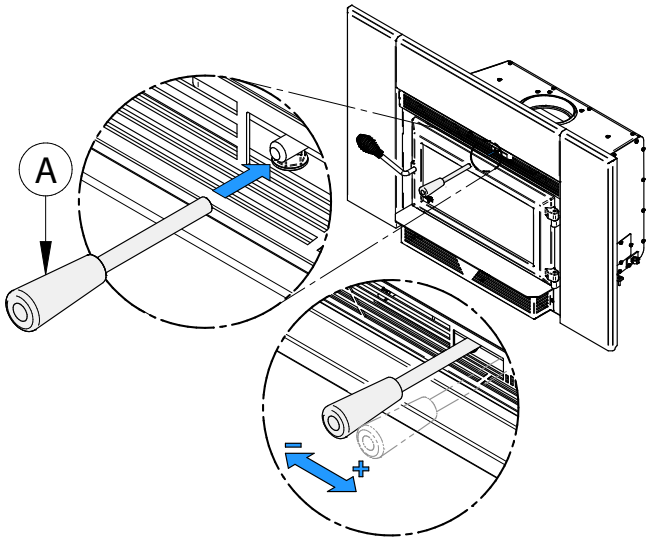

2.4.2 High burn rate (primary air control open)

Open the air control completely. Criss cross 6 kindling wood pieces in the back of the firebox. Then, place six small pieces (2”x2”) of wood on the kindling crossing them at the greatest possible angle. Criss cross ten others kindling wood pieces on the small pieces of wood. Tie knot with five sheets of paper and place them on top of the kindling wood. Light up the paper and let the door completely open for two minutes. Close the door.

When the kindling and the small pieces of wood are almost completely burnt out and it is possible to break them into pieces, level the coal bed and put four logs in the firebox in an east-west orientation. Place a medium log (about 4”x4”) in front of the combustion chamber and the biggest log (about 5”x5”) in the back of the combustion chamber. Place the last two medium pieces on top of the two others in an orientation that points to the right. Do not leave space between the pieces. Let the door open ajar at 90° for 5 minutes and close the door.

2.4.3 Medium and low burn rate

On a 2” coal bed that is still red, place five logs of approximatively 4”x4” or 3”x3” with an east-west orientation. Place two logs on the coal bed with approximatively 4” between them and the other three on top. There should be air space between each logs and between the logs and the bricks. Let the door ajar at 90° for 5 minutes and then close the door with the primary air control fully open. Leave to burn with the primary air control open for approximately 10 minutes and then close the primary air control completely for the low burn rate and halfway for the medium burn rate.

WARNING

Before opening the door completely to add wood to the insert, <u>the fan must be turned OFF</u> to avoid blowing ash outside the combustion chamber. Refer to section "5.1 Blower" of the owner's manual for how to turn OFF the fan.

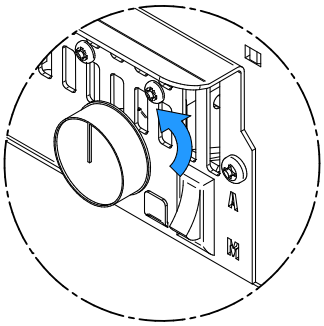

ENGLISH

3. Clearances to Combustible Material

When the insert is installed so that its surfaces are at or beyond the minimum clearances specified, combustible surfaces will not overheat under normal and even abnormal operating conditions.

NO PART OF THE INSERT MAY BE LOCATED CLOSER TO THE COMBUSTIBLE THAN THE MINIMUM CLEARANCE FIGURES GIVEN.

CLEARANCES MAY ONLY BE REDUCED BY MEANS APPROVED BY THE REGULATORY AUTHORITY.

3.1 Minimum Masonry Opening and Clearances to Combustibles

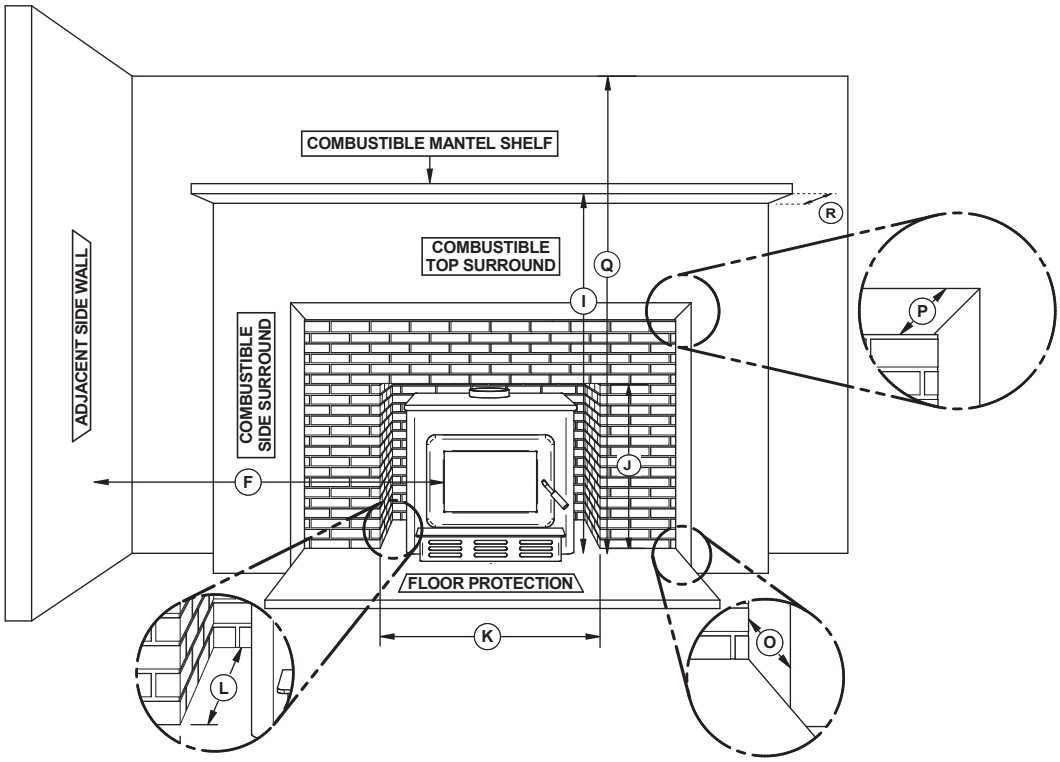

Masonry Opening and Clearances

	MINIMUM CLEARANCES
F	16" (406 mm)
I	34" (864 mm)
Q	72" (183 cm)

	MAXIMUM THICKNESS
O	3" (76 mm)
P	1.5" (38 mm)
R	12" (305 mm)

	MINIMUM MASONRY OPENING
J	19" (483 mm)
K[1]	25" (635 mm)
L	15 ½" (394 mm)

	FACADE CLEARANCES
From combustible side surround (**G**)	1" (25 mm)
From combustible top surround (**H**)	1" (25 mm)

[1] If a fresh air intake is required, it is recommended to add at least 4" to the width of the minimum opening of the hearth.

ENGLISH

3.2 Floor Protection

It is necessary to have a floor protection made of non-combustible materials that meets the measurements specified in the "Table 1 : Floor Protection" below.

Table 1 : Floor Protection

	FLOOR PROTECTION	
	Canada	**USA**
B[1]	18" (457 mm)	16" (406 mm)
M	8" (203 mm)	N/A
N	N/A	8" (203 mm)

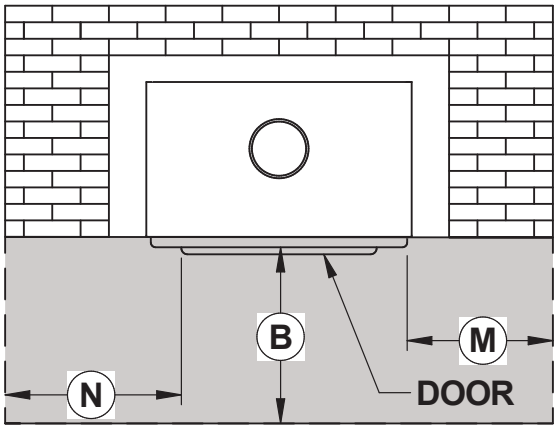

Floor Protection

3.3 R Value

There are two ways to calculate the R-value of the floor protection. First, by adding the R-values of materials used, or by the conversion if the K factor and thickness of the floor protection are given.

To calculate the total R value from R values of the materials used, simply add the R-values of materials. If the result is equal to or greater than the R-value requirements, the combination is acceptable. R-values of some selected materials are shown below.

Table 2 : Thermal Characteristics of Common Floor Protection Materials[2]

MATERIAL	CONDUCTIVITY (K) PER INCH	RESISTANCE (R) PER INCH THICKNESS
Micore® 160	0.39	2.54
Micore® 300	0.49	2.06
Durock®	1.92	0.52
Hardibacker®	1.95	0.51
Hardibacker® 500	2.3	0.44
Wonderboard®	3.23	0.31
Cement mortar	5.00	0.2
Common brick	5.00	0.2
Face brick	9.00	0.11

[1]From door opening. The depth of the hearth extension in front of the insert is included in the calculation of the floor protector's dimensions. The masonry hearth should be at least 5" (127 mm) higher than the combustible floor in front of it and a floor protection must extend at least 16" (406 mm USA) and at least 18" (457 mm Canada) without an R value. If the hearth elevation is lower than 5" (127 mm), the non-combustible (B) floor protection in front of the insert should have an R value equal or greater than 1.00 and shall extend 23" (584 mm) in front of the unit.

[2] Information as reported by manufacturers and other resources.

MATERIAL	CONDUCTIVITY (K) PER INCH	RESISTANCE (R) PER INCH THICKNESS
Marble	14.3 – 20.00	0.07 – 0.05
Ceramic tile	12.5	0.008
Concrete	1.050	0.950
Mineral wool insulation	0.320	3.120
Limestone	6.5	0.153
Ceramic board (Fibremax)	0.450	2.2
Horizontal still air (1/8" thick)[1]	0.135	0,920**

Exemple:

Required floor protection R of 1.00. Proposed materials: four inches of brick and one inch of Durock® board:

Four inches of brick (R = 4 x 0,2 = 0,8) plus 1 inch of Durock® (R = 1 x 0.52 = 0.52).

0.8 + 0.52 = 1.32.

This R value is larger than the required 1.00 and is therefore acceptable.

In the case of a known K and thickness of alternative materials to be used in combination, convert all K values to R by dividing the thickness of each material by its K value. Add R values of the proposed materials as shown in the previous example.

Exemple:

K value = 0.75
Thickness = 1
R value = Thickness/K = 1/0.75 = 1.33

ENGLISH

[1] Horizontal still air can't be «stack» to accumulate R-values; each layer must be separated with another non-combustible material.

4. Installing Options on Your Product and Replacing Parts

4.1 Replacement and Adjustment

4.1.1 Door

Note: The images shown are for guidance only and may be different from your product, but the assembly remains the same.

In order for the insert to burn at its best efficiency, the door must provide a perfect seal with the firebox. Therefore, the gasket should be inspected periodically to check for a good seal. The tightness of the door seal can be verified by closing and latching the door on a strip of paper. The test must be performed all around the door. If the paper slips out easily anywhere, either adjust the door or replace the gasket.

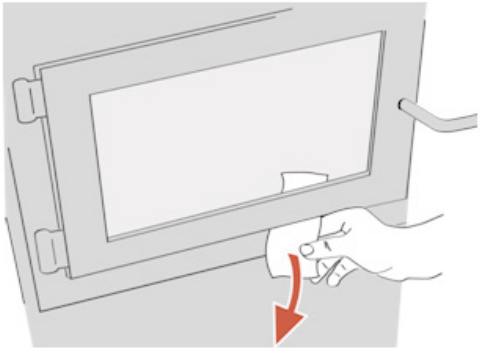

ENGLISH

4.1.2 Adjustment

The gasket seal may be improved with a simple latch mechanism adjustment:

1. Remove the split pin by pulling and turning it using pliers.
2. Turn the handle one counterclockwise turn to increase pressure.
3. Reinstall the split pin with a small hammer.

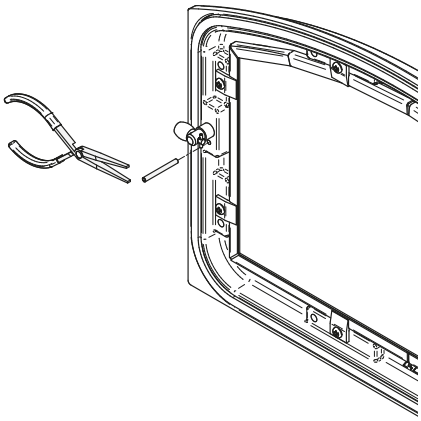

Figure 7 : Removing the split pin

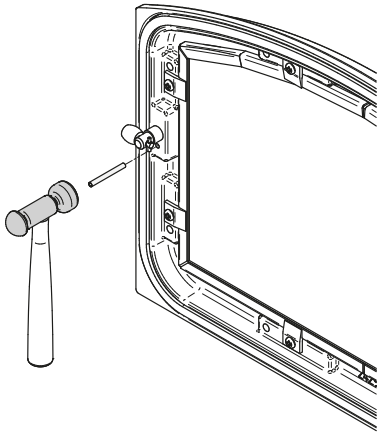

Figure 8 : Installing the split pin

4.1.3 Door Alignment

To align, open the door and loosen the pressures screws located on the lower and upper hinges of the door using a 3/32” Allen key to free the adjustable hinge rods.

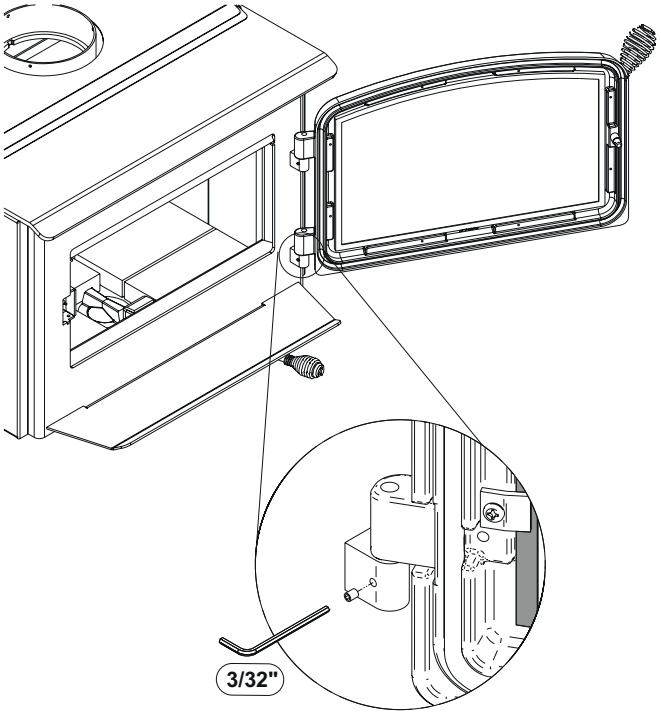

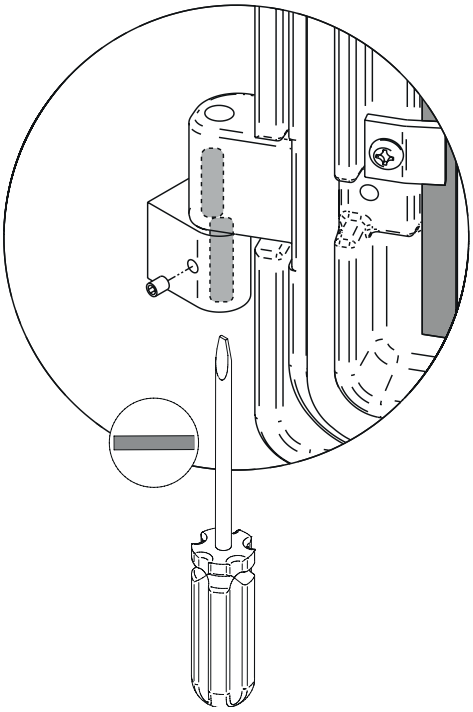

Using a flat screwdriver, turn the adjustable hinge rods in the direction shown to adjust the doors. Tighten all door hinge pressure screws when they are at the desired positions. Configurations 1-2-3-4-5-6, show in which direction these act on the adjustment of the door.

①		②		③		④	
	A		A		A		A
	B		B		B		B

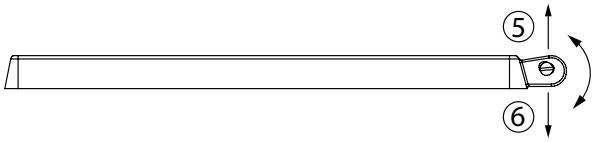

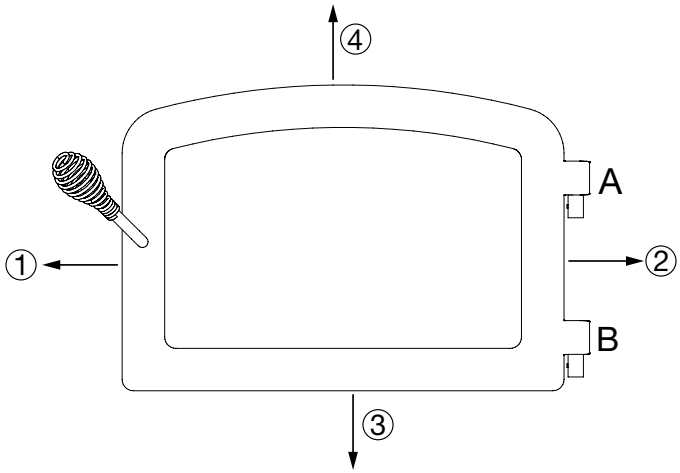

ENGLISH

4.1.4 Glass Replacement

The glass used is a ceramic glass, 5/32" (4 mm) thick, 18-31/32" X 9-1/8" (482 mm x 232 mm) tested to reach temperatures up to 1400° F. If the glass breaks, it must be replaced by a ceramic glass from SCHOTT with the same specification. Contact your dealer to obtain a genuine replacement part. **Tempered glass or ordinary glass will not withstand the high temperatures of this unit.**

WARNING : DO NOT USE SUBSTITUTE MATERIALS WHEN REPLACING THE GLASS.

To remove or replace the glass **(D)**:

1. Remove the door from its hinges and lay it on a soft, flat surface.
2. Remove the screws **(A)**, the glass retainers **(B)**, and the metal frames **(C)**.
3. Remove the glass **(D)**. If it is damaged install a new one in place. The replacement glass must have a gasket all around (see procedure below).
4. Reinstall the glass, being careful to centre the glass in the door and not to over-tightening the retaining screw.

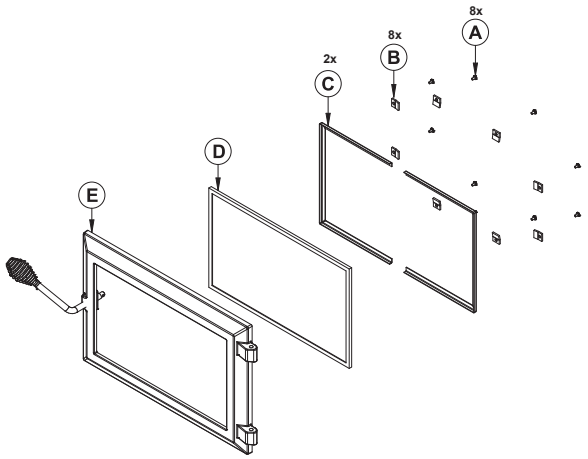

Figure 9 : Replacing the glass

The two main causes of broken door glass are uneven placement in the door and over-tightening the retaining screws.

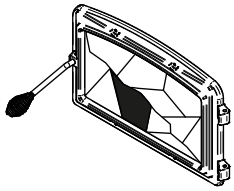

Do not clean the glass when the stove is hot.

Do not abuse the glass door by striking or slamming shut.

Do not use the stove if the glass is broken.

4.1.5 Glass Gasket Replacement

The glass gasket is flat, adhesive-backed, woven fibreglass. The gasket must be centred on the edge of the glass.

1. Follow the steps of the previous section to remove the glass.
2. Remove the old gasket and clean the glass thoroughly.
3. Peel back a section of the paper covering the adhesive and place the gasket on a table with the adhesive side up.
4. Stick the end of the gasket to the middle of one edge, then press the edge of the glass down onto the gasket, taking care that it is perfectly centred on the gasket.
5. Peel off more of the backing and rotate the glass. The gasket must not be stretched during installation.

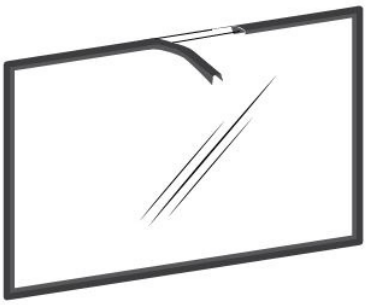

ENGLISH

6. Cut the gasket to the required length.

7. Pinch the gasket onto the glass in a U shape, all around the glass.

By following these instructions, the edge clearances are maintain.

4.1.6 Gasket

It is important to replace the gasket with another having the same diameter and density to maintain a good seal.

1. Remove the door and place it face-down on something soft like a cushion of rags or a piece of carpet.
2. Remove the old gasket from the door. Use a screwdriver to scrape the old gasket adhesive from the door gasket groove.
3. Apply a bead of approximately 3/16" (5 mm) of high temperature silicone in the door gasket groove. Starting from the middle, hinges side, press the gasket into the groove. The gasket must not be stretched during installation.
4. Leave about ½" (10 mm) long of the gasket when cutting and press the end into the groove. Tuck any loose fibers under the gasket and into the silicone.
5. Close the door. Do not use the insert for 24 hours.

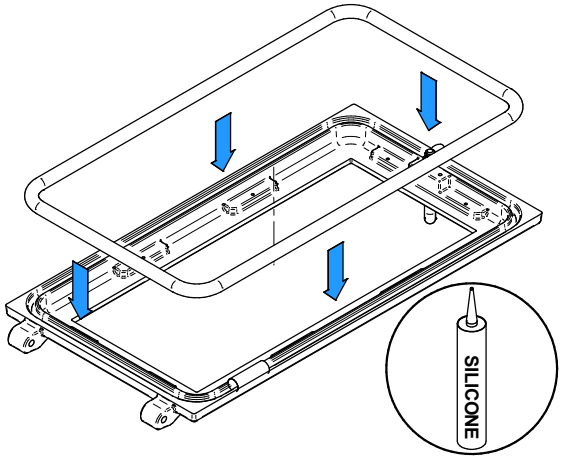

ENGLISH

4.2 Removal of Refractory Stones

1. Empty the combustion chamber.

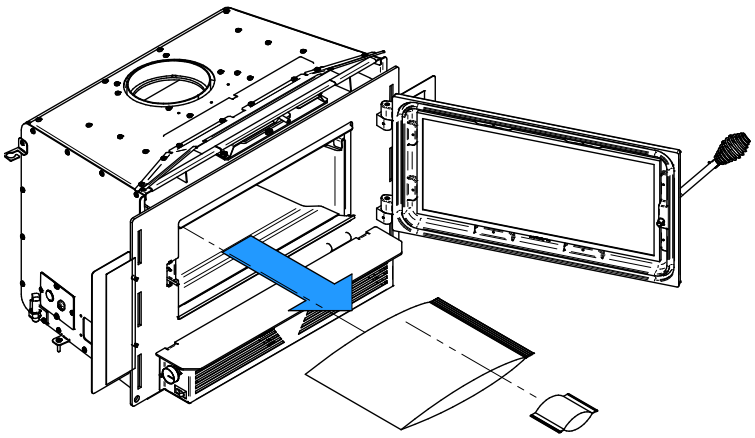

Figure 10 : Empty the combustion chamber

2. Unscrew the two supports **(B)** of the refractory bricks from the sides. The stones can then be removed in the order shown in Figure 12.

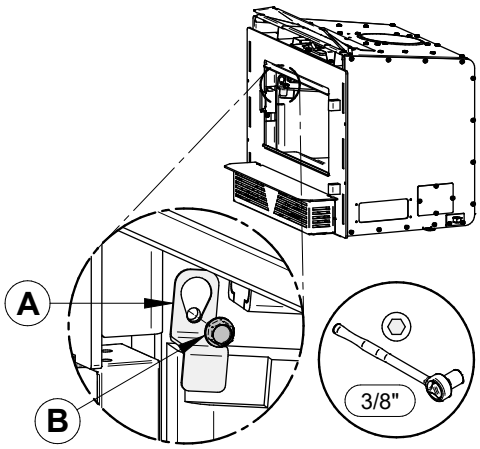

Figure 11 : Install the Combustion Chamber Bricks

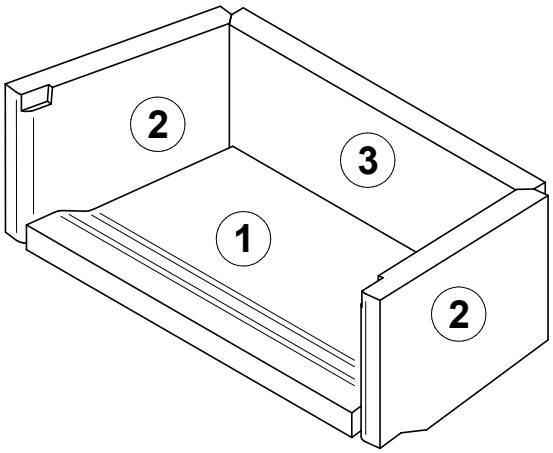

Figure 12 : Stones scheme

4.3 Connecting the Blower With a BX Wire

CAUTION RISK OF ELECTROCUTION.

All electrical connections should be performed by a certified electrician.

1. Remove the screws **(A)** to remove the plate **(B)** and gain access to the wires. Save the screws for later.
2. Disconnect the black **(C)** and white **(D)** wires.
3. Remove the ground screw **(E)** to remove the green wire. Save the screw for later.

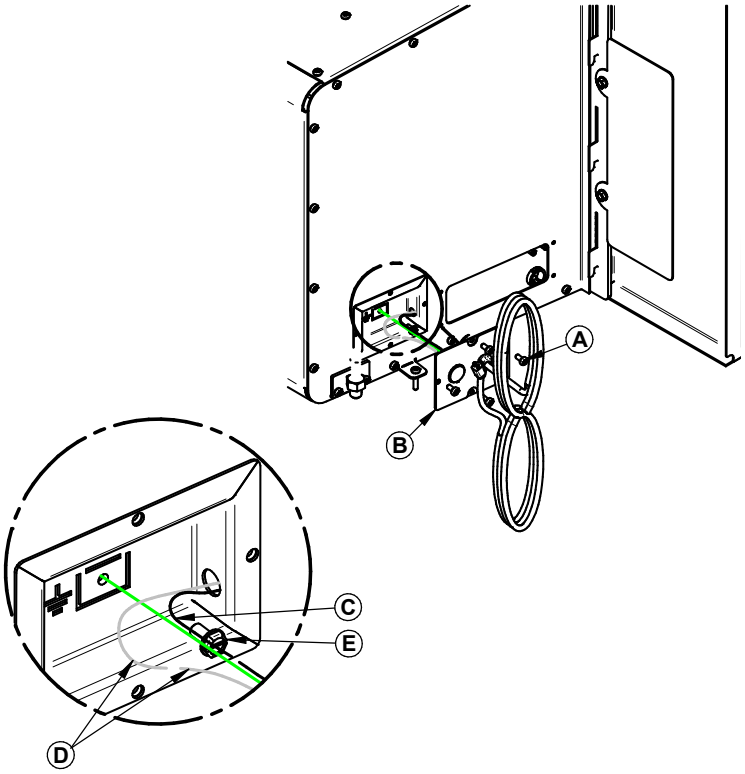

ENGLISH

4. Strip a section of ½" of the black and white wires **(F)** that are in the box attached to the insert.

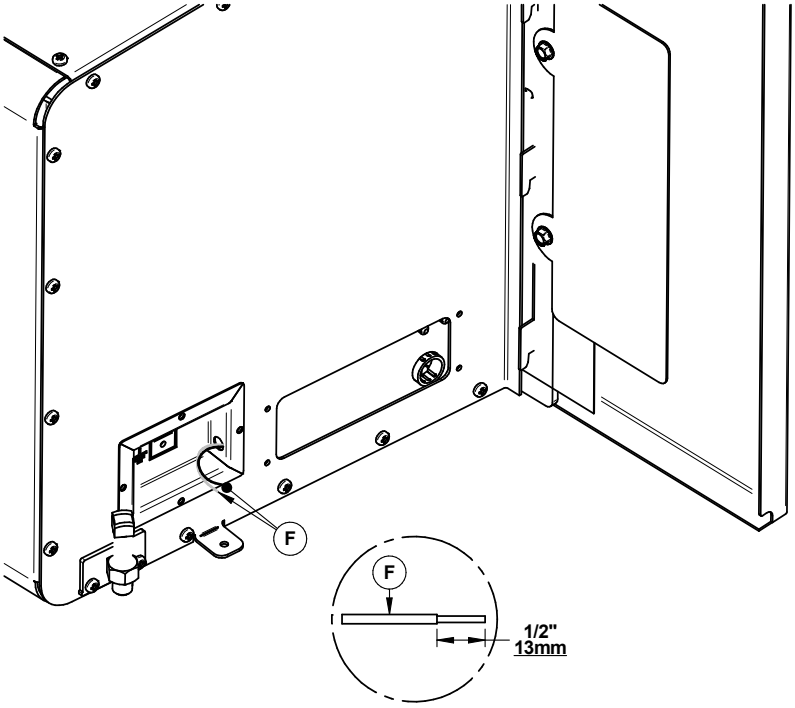

ENGLISH

5. Remove the piece of metal **(G)** from the plate **(B)** obstructing the hole to the left of the power cord **(H)** using pliers or a screwdriver. Cut the power cord **(H)** on each side of the black clamp.

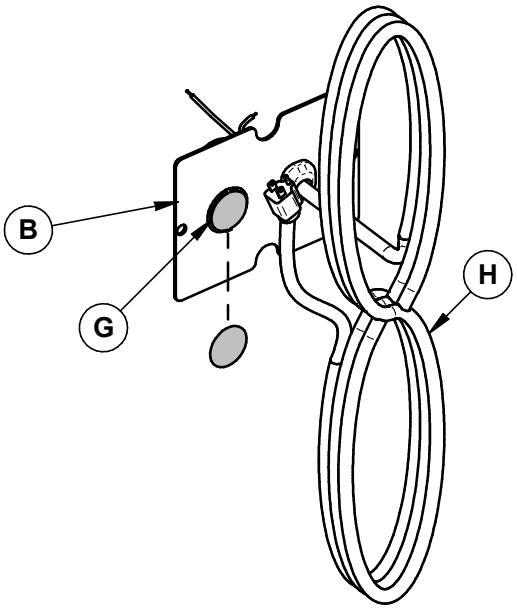

6. Install the connector **(I)** supplied with the manual kit in the hole formed in the plate **(B)** in step 5.

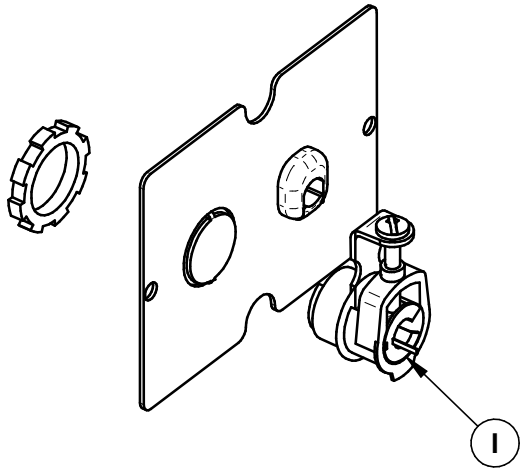

7. Pass the new wires through the connector **(I)** and install the sleeve **(J)** supplied with the manual kit on the BX wire.
8. Join the black and white wires using marettes **(K)** (not supplied) and secure the ground wire with the screw **(E)** kept in step 3.
9. Close the connection box by screwing in the plate **(B)** with the two screws **(A)** kept in step 1 and secure the BX wire by tightening the screw **(L)** of the connector **(I)**.

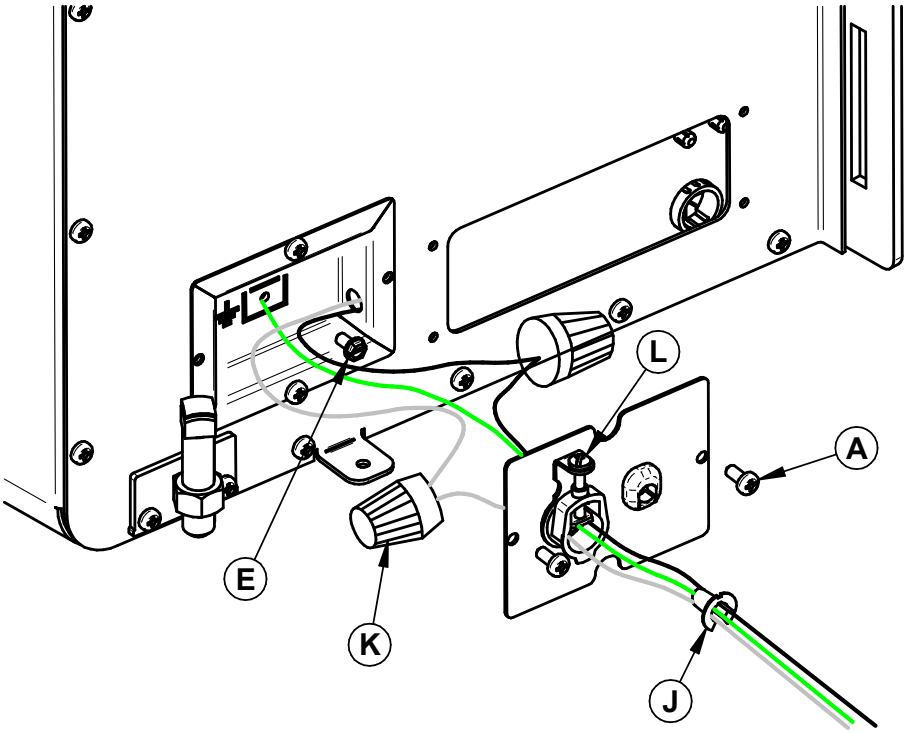

ENGLISH

4.4 Changing the Side of the Blower Power Cord

1. Open the door and unscrew the screws **(A)** to remove the grille **(B)** in front of the fan. Then unscrew the three plastic grommets **(C)** located on the base of the fan. Remove the wires from the grommets. Keep the screws.

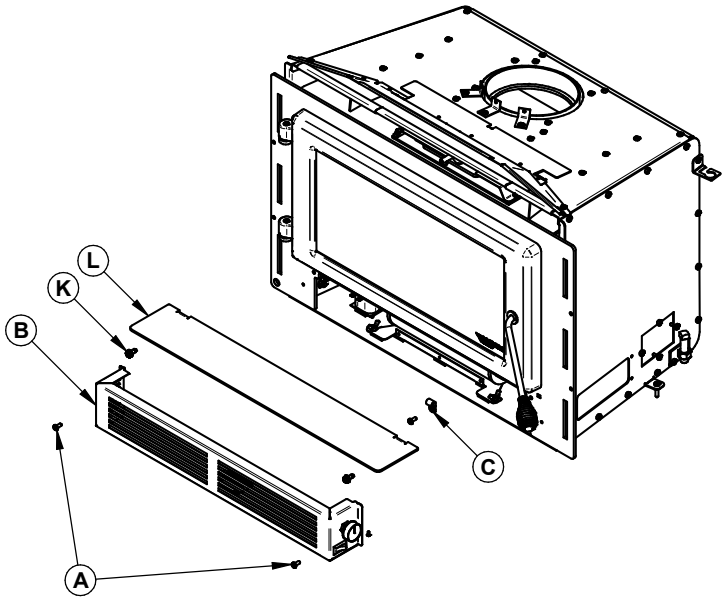

2. Disconnect the white wire **(D)** and the black wire **(E)** (follow the wires coming from the inside of the insert). Remove the four screws **(F)** that hold the connection box **(G)** to the insert and gently pull it out until the white and black wires come out of the insert. Keep the screws.

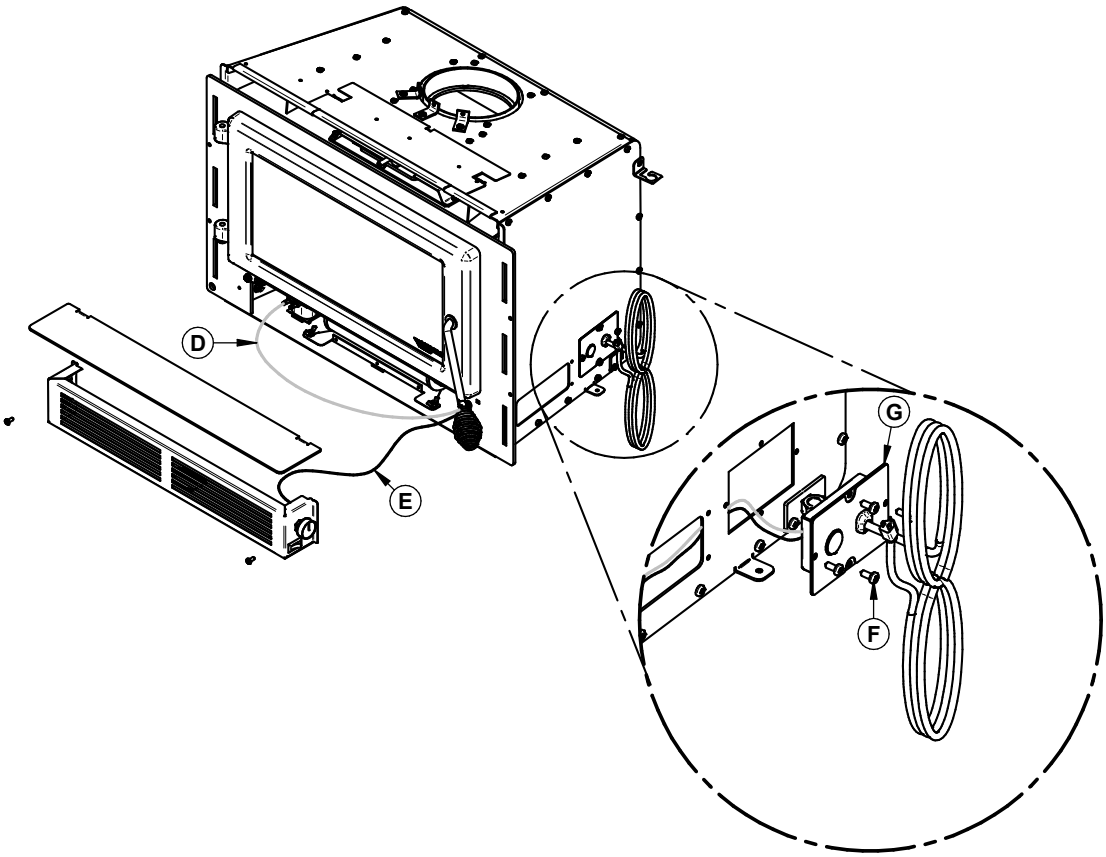

ENGLISH

3. Unscrew the plate **(H)** on the other side of the insert. Keep the plate **(H)** and screws **(I)**.

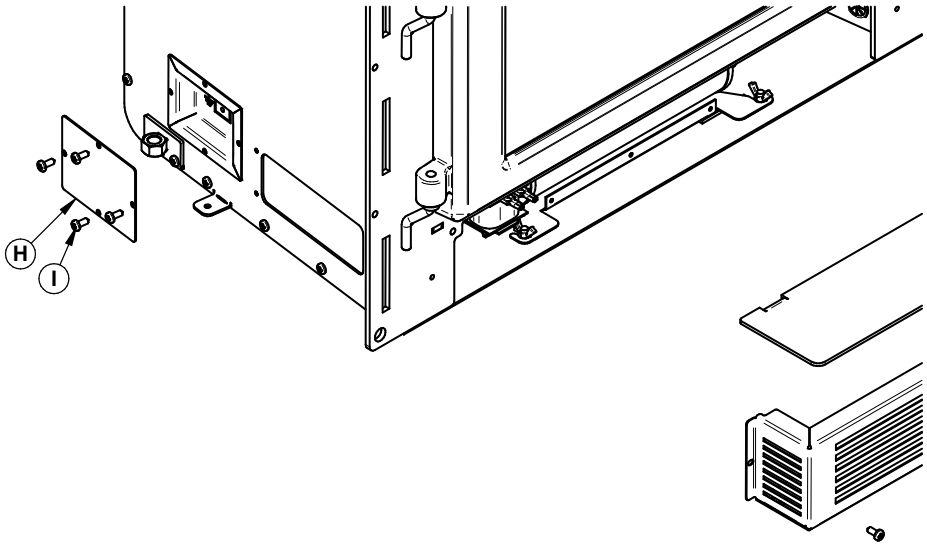

ENGLISH

4. Pass the white **(D)** and black **(E)** wires through the hole formed in the previous step by pulling them towards the front of the insert. Then pass the wires through the grommet **(J)** located on the side at the front of the device.

5. Screw the connection box **(G)** with the four screws **(F)** kept in step 2.

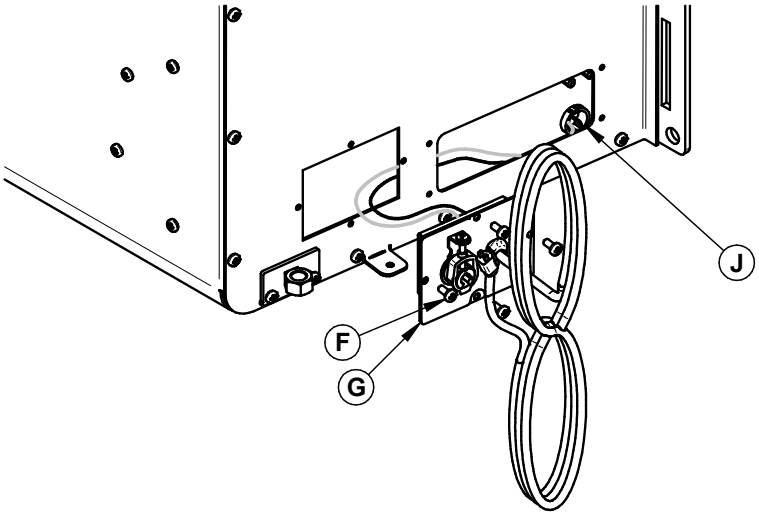

6. Install the plate **(H)** with the screws **(I)** kept in step 3 to the initial location of the connection box **(G)**.

7. Pull the excess black and white wires into the insert to be able to connect them to their respective locations (the black wire is connected to the rheostat and the white wire is connected to the blower). An extension cable must be installed on the black wire to get to the rheostat (extension not supplied).

8. Secure the excess wires using the three plastic grommets **(C)** removed in step 1.

9. Reinstall the grille **(B)** with the screws **(A)** kept in step 1.

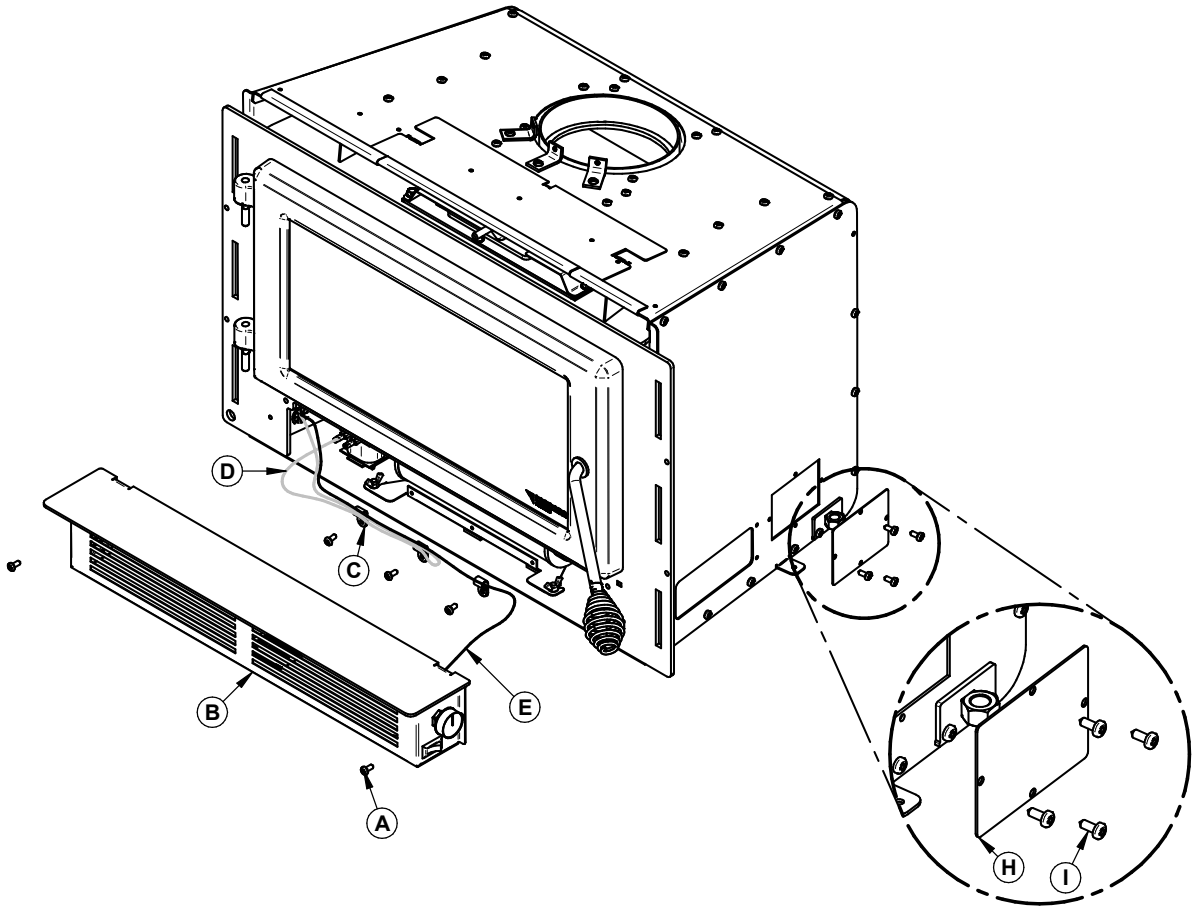

ENGLISH

4.5 Blower Removal

1. Open the insert door to gain access to the fan grille **(B)**.

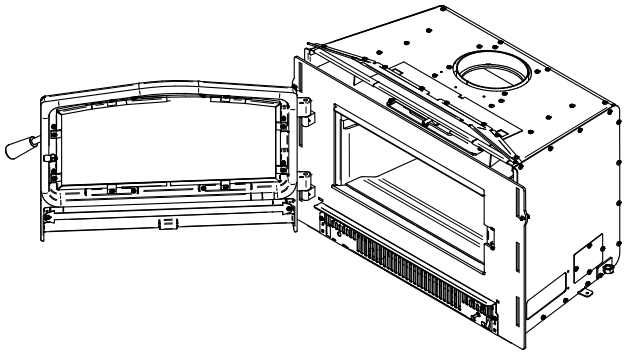

2. Remove the two screws **(A)** on each side of the grille **(B)** to be able to remove it.

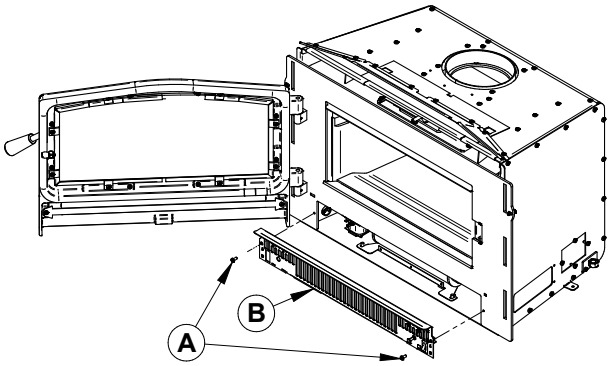

3. Unscrew the two wing nuts **(C)** on each side of the fan.

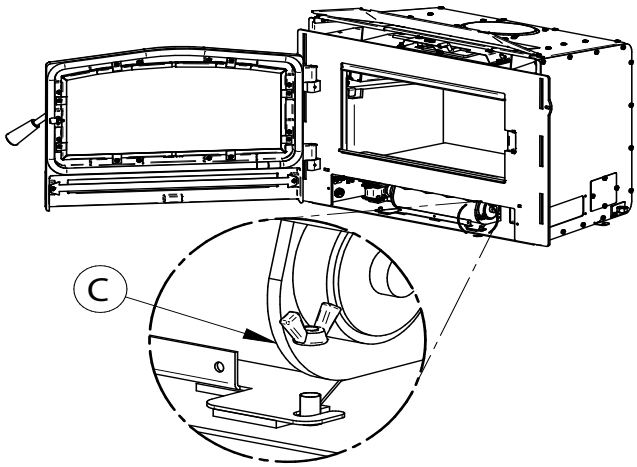

4. Take out the fan **(D)**.

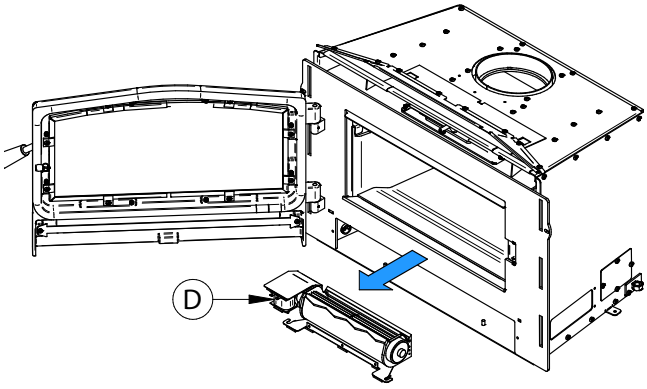

ENGLISH

4.6 Removable Air Control Handle

This insert comes with a removable handle for the primary air control. A holder for the handle is supplied with the manual. Here is an example of the holder installation.

CAUTION: Do not leave the handle on the air control after use, as it will get very hot.

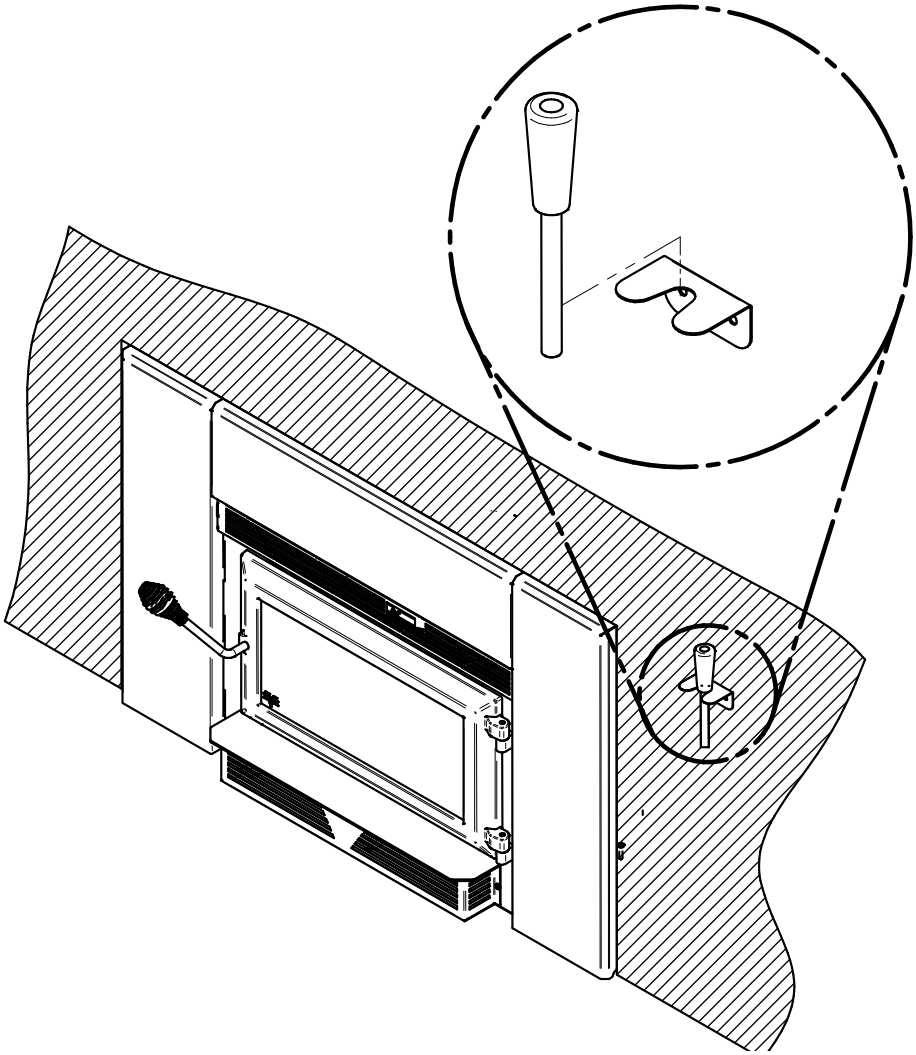

ENGLISH

4.7 Faceplate Installation

1. Lay the panels on a flat and non abrasive surface. Align the top panel holes **(A)** with the left and right panels **(B)** and **(C)**. Secure together using the bolts **(D)** and nuts **(E)** provided.

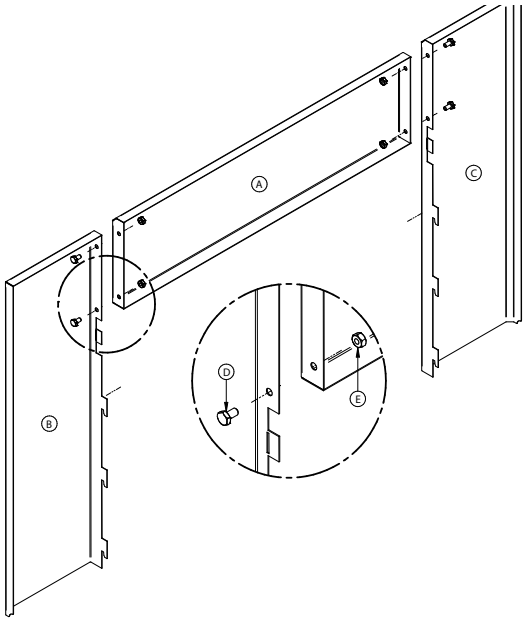

2. Install the grille on the assembled faceplate and bend the tabs using pliers.

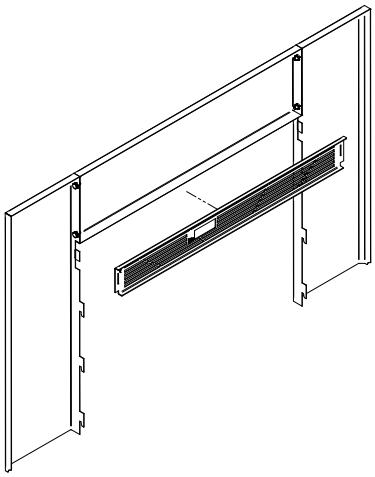

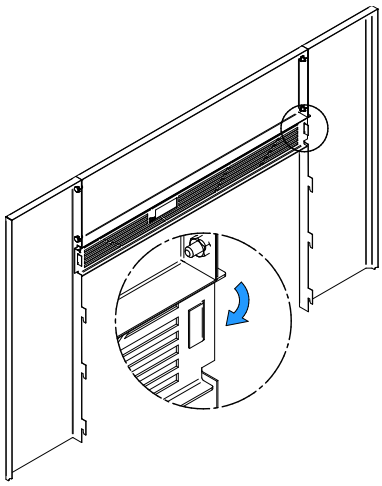

3. Hang the assembled faceplate on the insert.

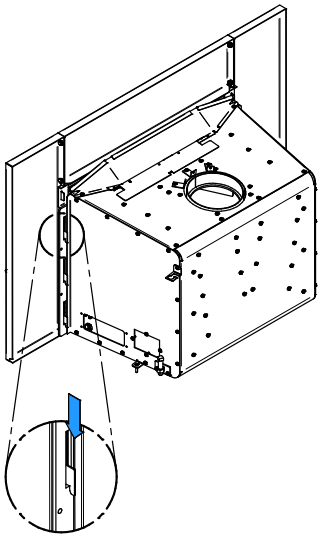

ENGLISH

4.8 Faceplate Decorative Panel Installation/Removal

It is possible to install the insert with or without the faceplate decorative panel. The latter is included with the insert and is already partially installed with two screws at each end. Here are the steps to remove or keep it :

Faceplate decorative panel removal

- Remove the screws **(B)** at each end of the panel **(A)** to be able to remove it afterwards.

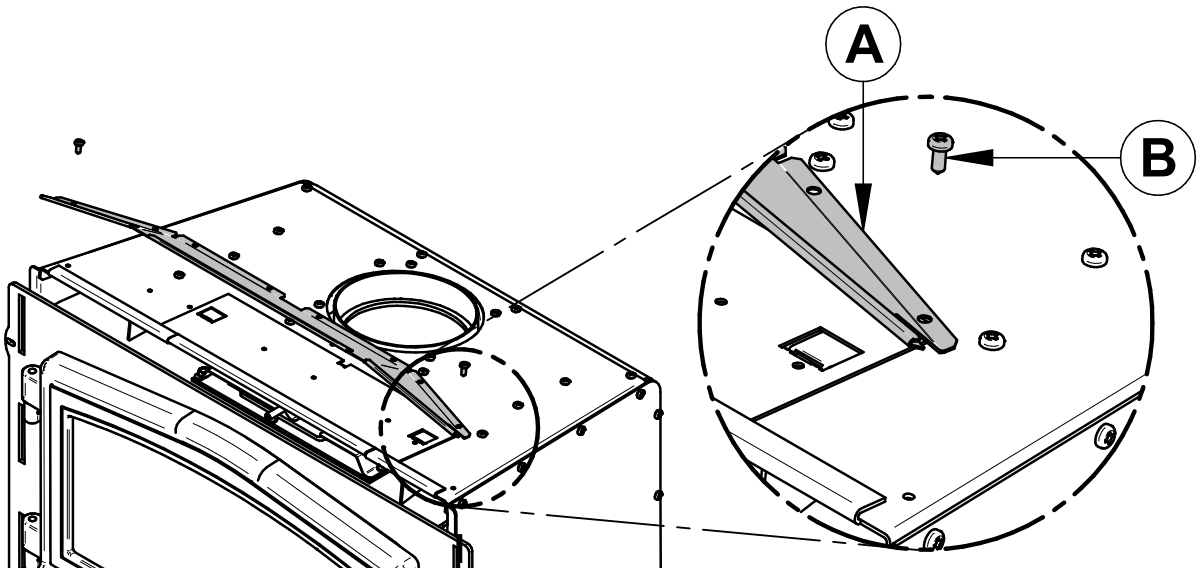

Faceplate decorative panel installation

- Screw the panel with 6 additional screws **(B)**.

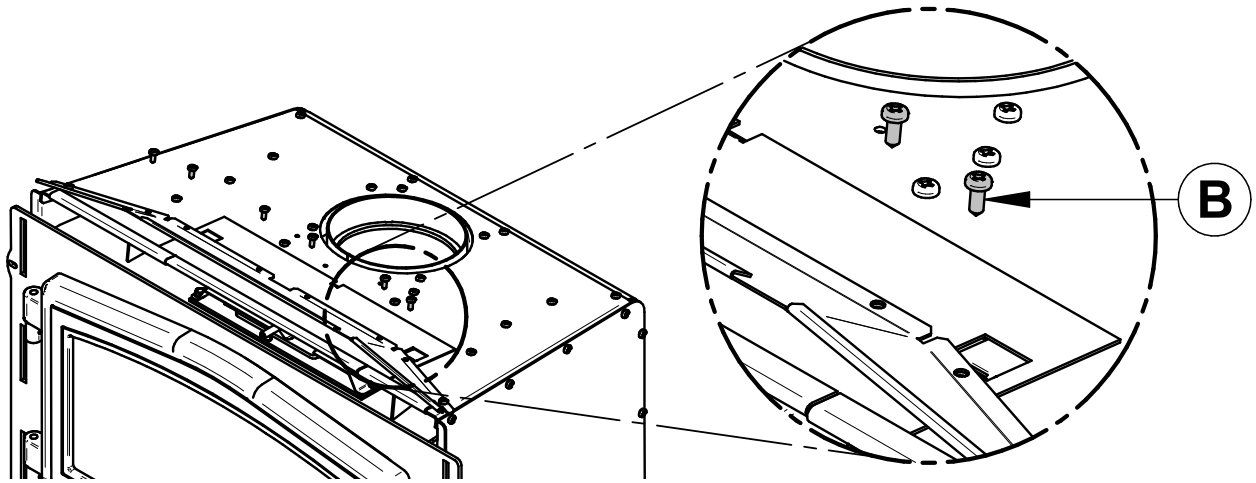

ENGLISH

4.9 Optional Fresh Air Intake Kit Installation

The fresh air intake kit may be installed on the right or left end side of the unit. The unused side must be covered by the plate provided in the user manual kit.

- Install the fresh air intake adapter **(E)** with four screws **(F)** then secure the flexible pipe[1] **(H)** (not included) to the adapter using one of the pipe clamps **(G)**. Secure the other end of the pipe to the outside wall termination **(J)** using the other pipe clamp. The outside wall termination must be installed outside of the home.

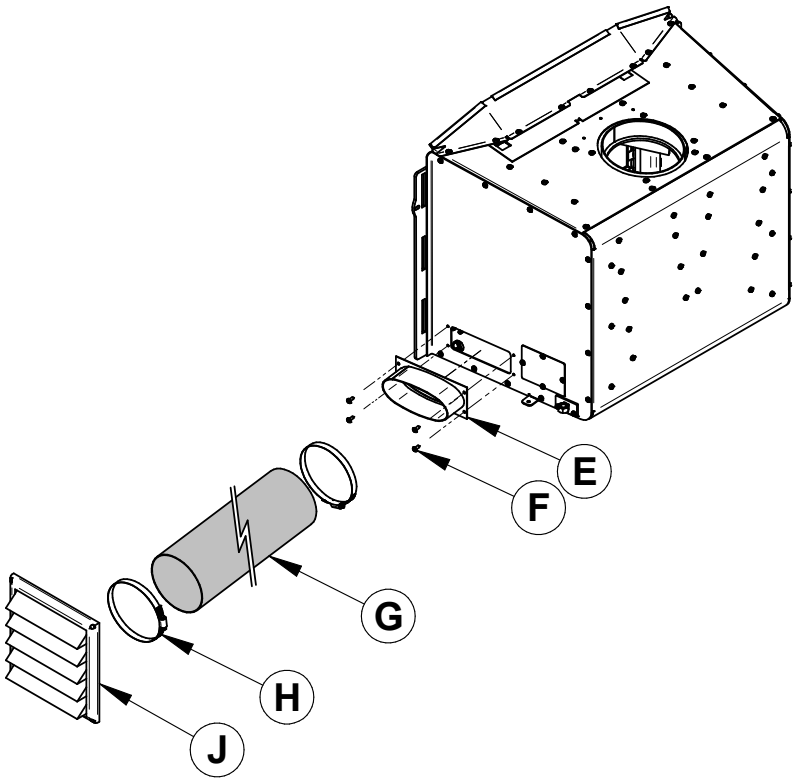

ENGLISH

[15] The pipe must be HVAC type, insulated, and must comply with ULC S110 and/or UL 181, Class 0 or Class 1.

4.10 Optional Fire Screen Installation

In the United States or in provinces with a particulate emissions limit (e.g.: US EPA), the use of open-door wood stoves with a rigid firescreen is prohibited.

1. Open the door.

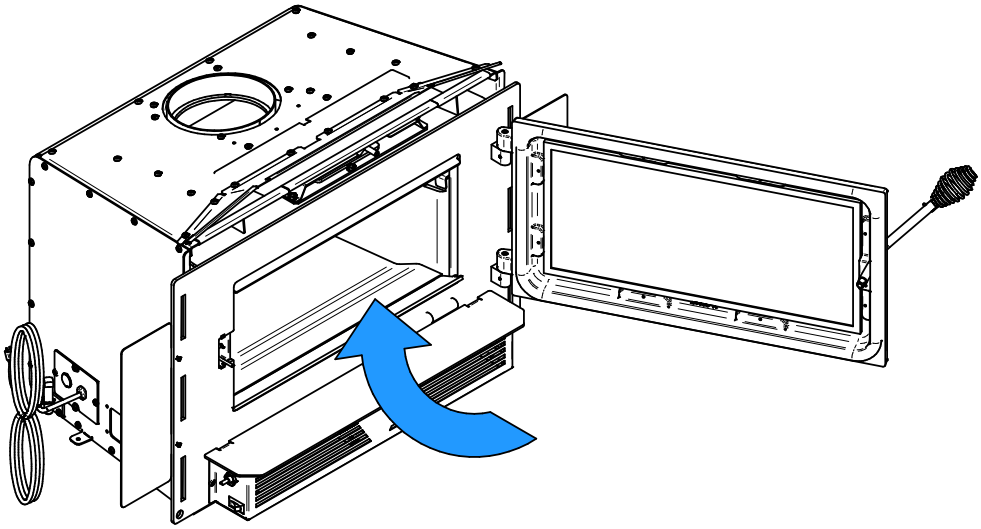

2. Hold the fire screen by the two handles and bring it close to the door opening.

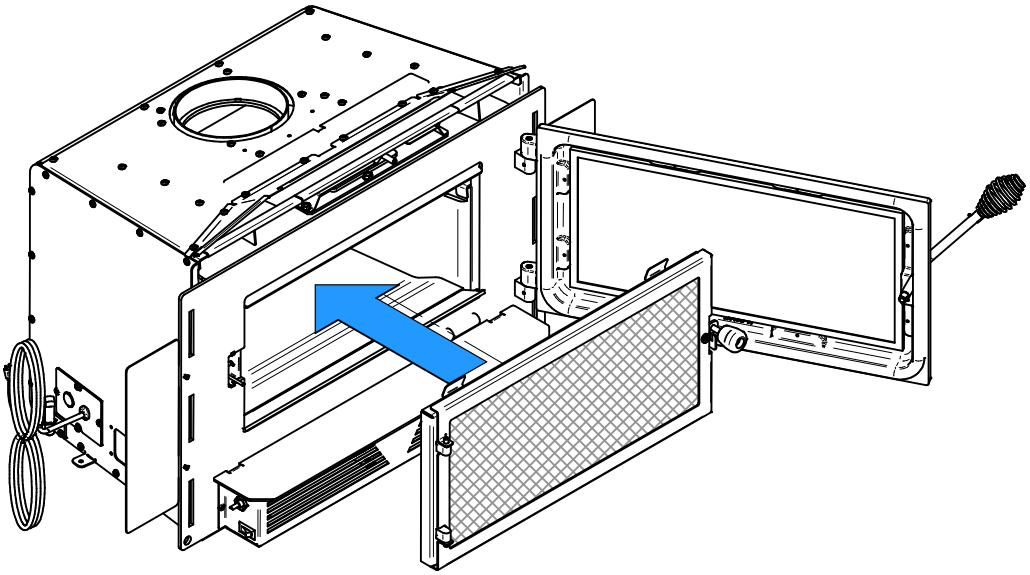

ENGLISH

3. Lean the upper part of the fire screen against the top door opening making sure to insert the top fire screen brackets in front of the primary air deflector.

4. Lift the fire screen upwards and push the bottom part towards the insert then let the fire screen rest on the bottom of the door opening.

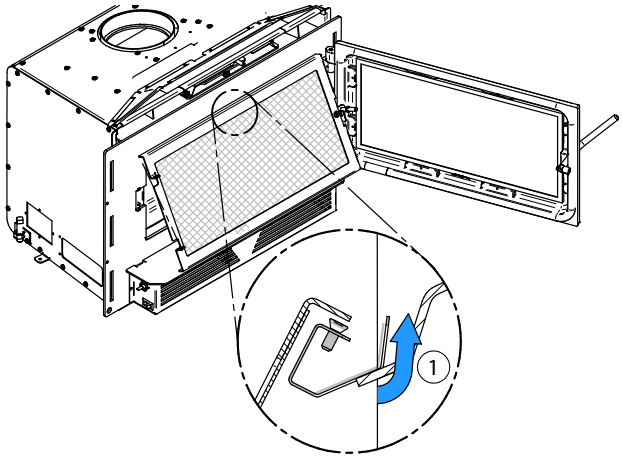

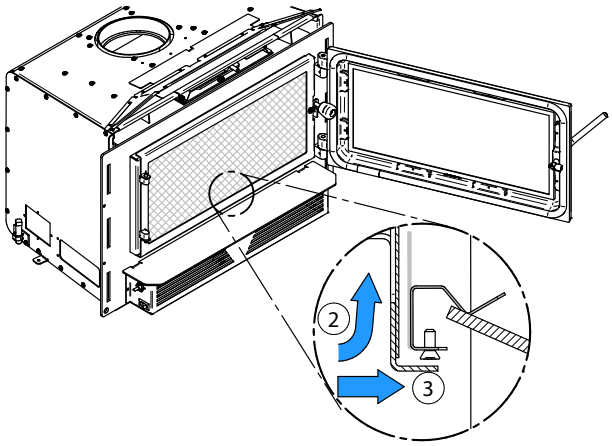

Never leave the insert unattended while in use with the fire screen.

Do not use the blower with the fire screen installed. May cause smoke spillage.

Do not use the fire screen with a offset liner adaptor.

4.11 Air Tubes and Baffle Installation

1. Starting with the rear tube, lean and insert the right end of the secondary air tube into the rear right channel hole. Then lift and insert the left end of the tube into the rear left channel.

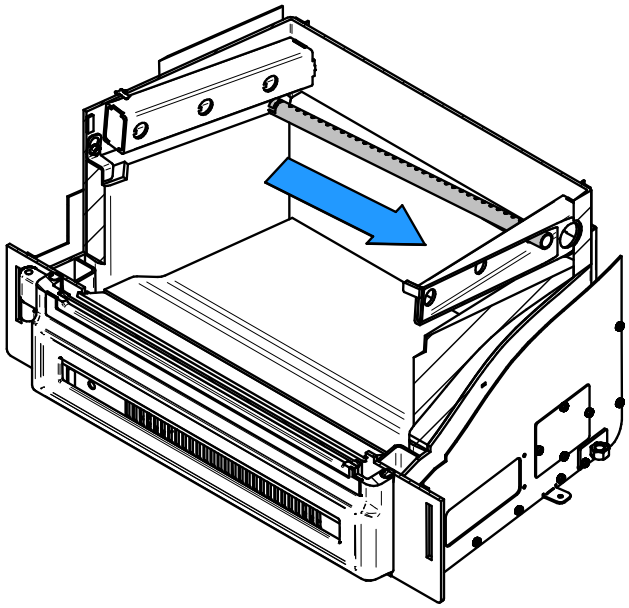

ENGLISH

2. Align the notch in the left end of the tube with the key of the left air channel hole. Using a « Wise grip » hold the tube and lock it in place by turning the tube as shown. Make sure the notch reaches the end of the key way.

3. Install the baffle.

4. Repeat steps 1 and 2 for the two other tubes.

5. To remove the tubes use the above steps in reverse order.

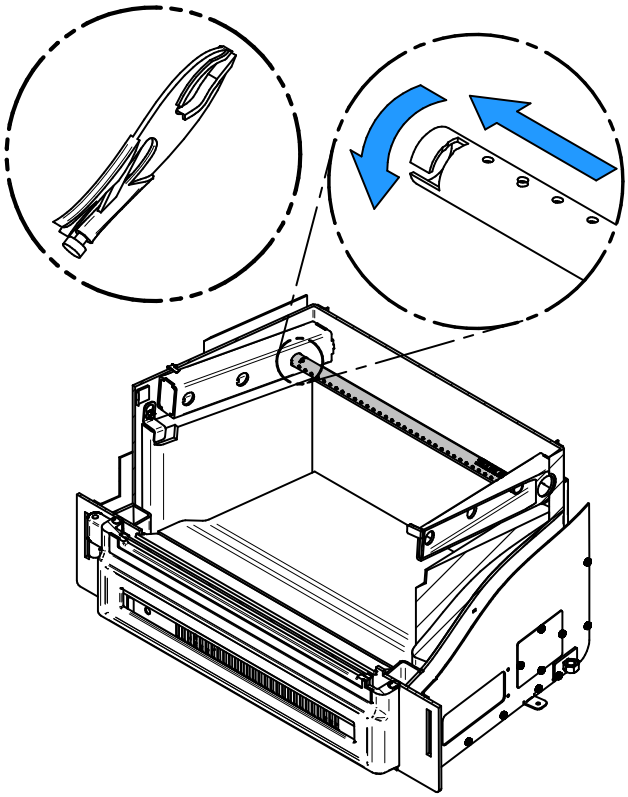

Note that secondary air tubes **(A)** *can be replaced without removing the baffle board* **(B)** *and that all tubes are identical.*

ENGLISH

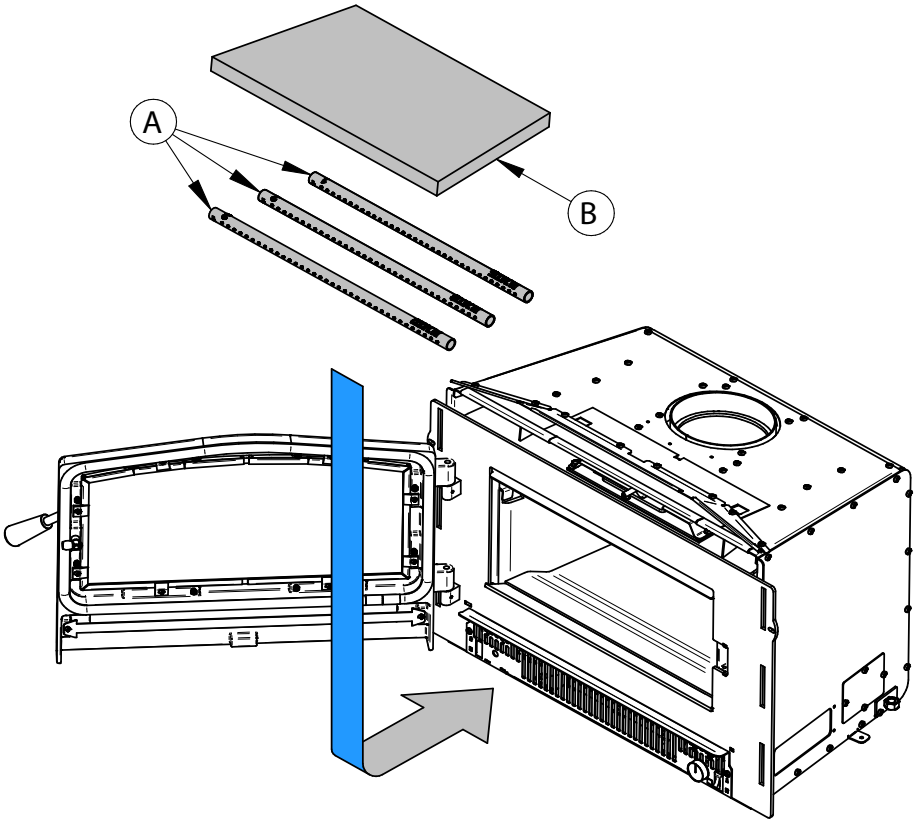

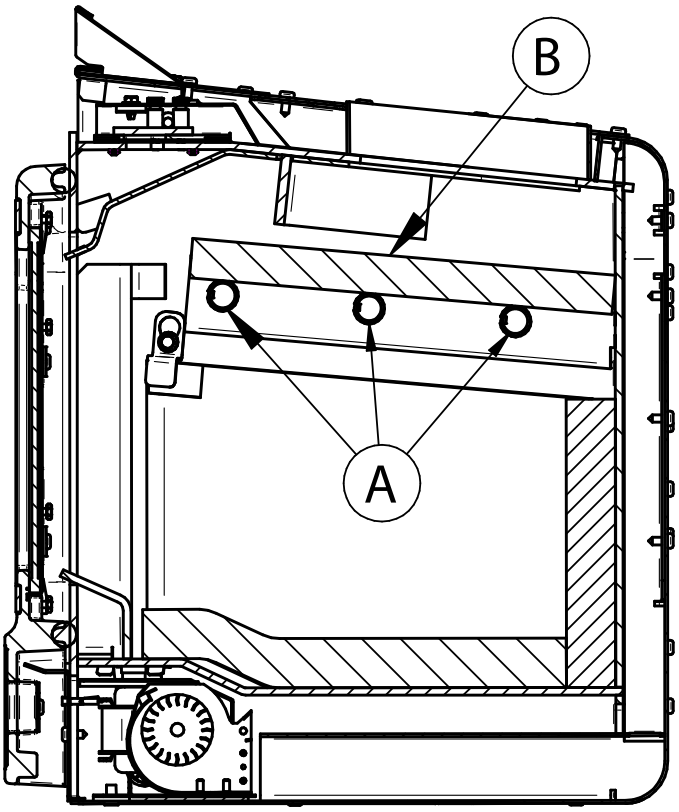

ENGLISH

4.12 Removal Instructions

For inspecting purposes, the insert may need to be removed. To remove the insert, follow these instructions:

- Remove the blower grille **(E)** and faceplate **(D)** by lifting it and then pulling on it.
- Remove the blower **(C)**.
- Remove the three screws securing the pipe connector **(A)**.
- Unscrew the bolts securing the insert to the floor on each side of the unit **(B)**.

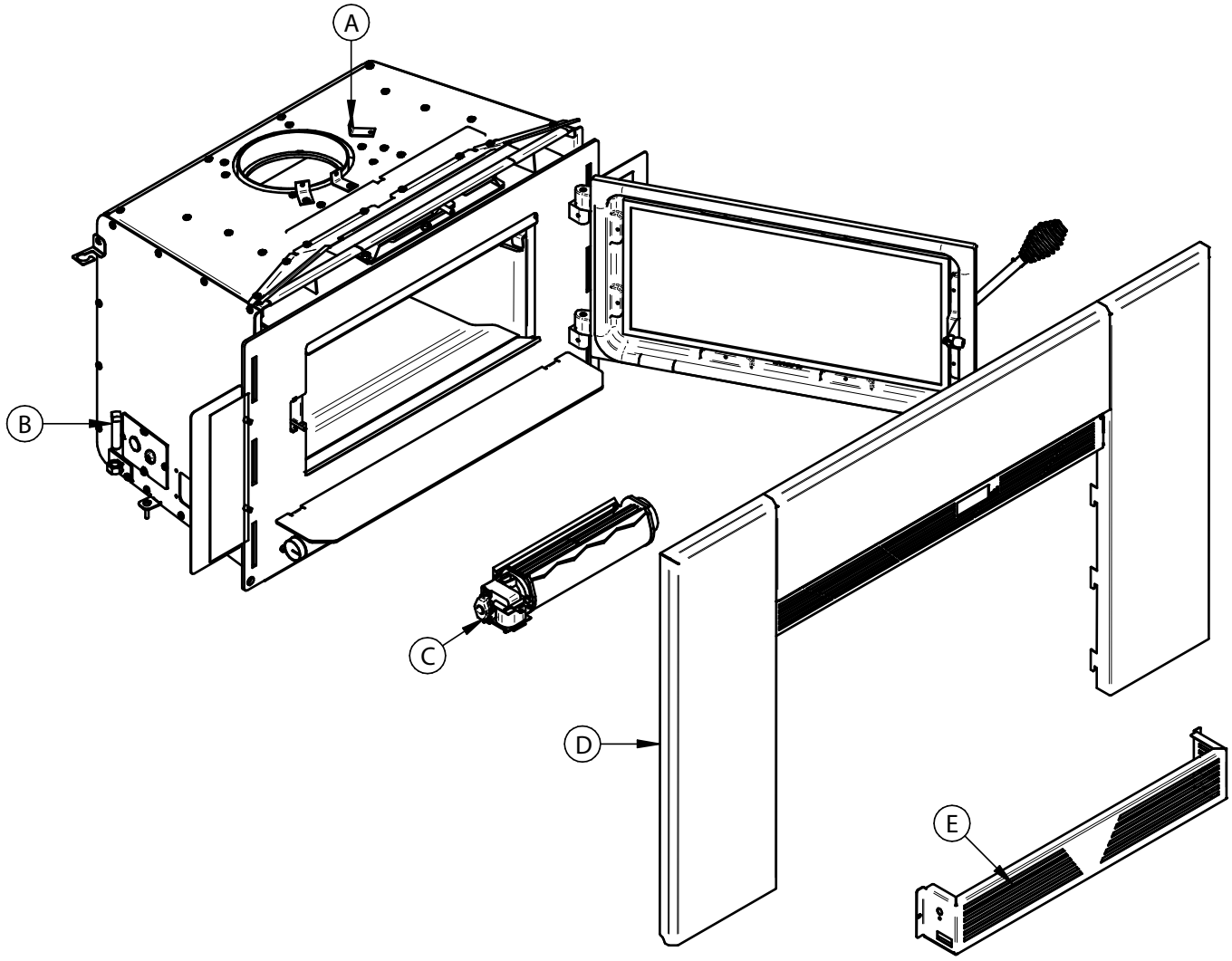

ENGLISH

4.13 Exploded Diagram and Parts List

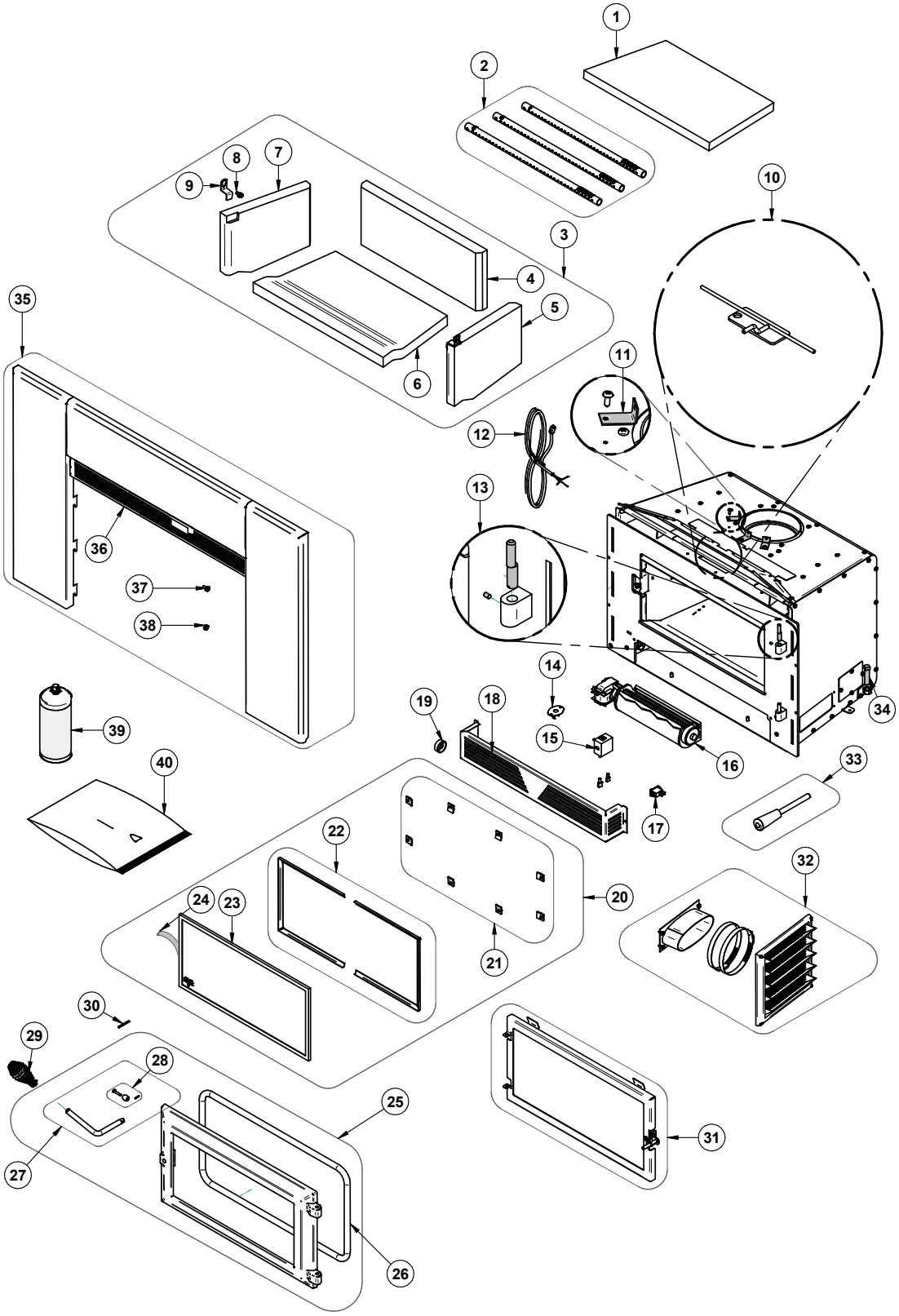

ENGLISH

IMPORTANT: THIS IS DATED INFORMATION. When requesting service or replacement parts for this unit, please provide the model number and the serial number. We reserve the right to change parts due to technology upgrades or availability. Contact an authorized dealer to obtain any of these parts. Never use substitute materials. Use of non-approved parts can result in poor performance and safety hazards.

#	Item	Description	Qty
1	21636	2.1 SERIE C-CAST BAFFLE	1
2	SE74778	SECONDARY AIR TUBE KIT	1
3	SE22420	STONES KIT	1
4	22420	REAR REFRACTORY BRICK	1
5	22421	RIGHT REFRACTORY BRICK	1
6	22419	BOTTOM REFRACTORY STONE	1
7	22422	LEFT REFRACTORY BRICK	1
8	30060	THREAD-CUTTING SCREW 1/4-20 X 1/2" F HEX STEEL SLOT WASHER C102 ZINC	2
9	PL72040	REFRACTORY PANEL BRACKET	2
10	SE74766	DAMPER ASSEMBLY	1
11	PL34052	LINER FIXATION BRACKET	3
12	60013	POWER CORD 96" X 18-3 type SJT (50 pcs per carton)	1
13	SE74167	DOOR HINGE REPLACEMENT KIT	1
14	44028	CERAMIC THERMODISC F110-20F	1
15	44080	RHEOSTAT WITHOUT NUT (MODEL KBMS-13BV)	1
16	44075	TANGENTIAL BLOWER 1800 115V-60hZ-30W (S) 90 CFM	1
17	44091	ROCKER SWITCH 2 POSITION MSR-8	1
18	PL74880	FRONT HOUSING	1
19	44085	RHEOSTAT KNOB	1
20	SE74883	GLASS AND MOULDING KIT	1
21	SE53585	GLASS RETAINER KIT WITH SCREWS (12 PER KIT)	1
22	PL74883	GLASS FRAME	2
23	SE74882	GLASSES 18-31/32'' X 9-1/8''	1
24	AC06400	3/4" X 6' x 1/8" FLAT BLACK SELF-ADHESIVE GLASS GASKET (AC-GGK)	1
25	SE24406	VENTIS 2.1 DOOR ASSEMBLY	1
26	AC06500	SILICONE AND 5/8" X 8' BLACK DOOR GASKET KIT (AC-DGKNC)	1
27	SE70697	REPLACEMENT HANDLE WITH LATCH KIT	1
28	AC09185	DOOR LATCH KIT	1
29	AC07868	1/2" BLACK COIL HANDLE	1
30	30101	SPRING TENSION PIN 5/32"Ø X 1 1/2"L	1
31	AC01216	5"Ø FRESH AIR INTAKE KIT	1
32	AC01298	5"Ø FRESH AIR INTAKE KIT	1
33	SE74853	REMOVABLE AIR CONTROL HANDLE	1

#	Item	Description	Qty
34	30337	SQUARE HEAD SET SCREW 1/2-13 X 1-1/2"	2
35	VBA1545	26" X 42" REGULAR FACEPLATE	1
36	PL74884	VENTIS 2.1 DECORATIVE GRILL	1
37	30084	BOLT 1/4-20 X 1/2" GRADE 5	4
38	30100	BLACK HEX NUT 1/4 - 20 (NON-OILED)	4
39	AC05959	METALLIC BLACK STOVE PAINT - 342 g (12oz) AEROSOL	1
40	SE46342	VENTIS HEI190 INSTRUCTION MANUAL KIT	1

VENTIS LIMITED LIFETIME WARRANTY

The warranty of the manufacturer extends only to the original retail purchaser and is not transferable. This warranty covers brand new products only, which have not been altered, modified nor repaired since shipment from factory. Proof of purchase (dated bill of sale), model name and serial number must be supplied when making any warranty claim to your VENTIS dealer.

This warranty applies to normal residential use only. This warranty applies to normal residential use only. This warranty is void if the unit is used to burn material other than cordwood (for which the unit is not certified by EPA) and void if not operated according to the owner's manual. Damages caused by misuse, abuse, improper installation, lack of maintenance, over firing, negligence or accident during transportation, power failures, downdrafts, venting problems or under-estimated heating area are not covered by this warranty. The recommended heated area for a given appliance is defined by the manufacturer as its capacity to maintain a minimum acceptable temperature in the designated area in case of a power failure.

This warranty does not cover any scratch, corrosion, distortion, or discoloration. Any defect or damage caused by the use of unauthorized or other than original parts voids this warranty. An authorized qualified technician must perform the installation in accordance with the instructions supplied with this product and all local and national building codes. Any service call related to an improper installation is not covered by this warranty.

The manufacturer may require that defective products be returned or that digital pictures be provided to support the claim. Returned products are to be shipped prepaid to the manufacturer for investigation. Transportation fees to ship the product back to the purchaser will be paid by the manufacturer. Repair work covered by the warranty, executed at the purchaser's domicile by an authorized qualified technician requires the prior approval of the manufacturer. All parts and labour costs covered by this warranty are limited according to the table below.

The manufacturer, at its discretion, may decide to repair or replace any part or unit after inspection and investigation of the defect. The manufacturer may, at its discretion, fully discharge all obligations with respect to this warranty by refunding the wholesale price of any warranted but defective parts. The manufacturer shall, in no event, be responsible for any uncommon, indirect, consequential damages of any nature, which are in excess of the original purchase price of the product. **A one-time replacement limit applies to all parts benefiting from lifetime coverage.** This warranty applies to products purchased after March 1st, 2015.

DESCRIPTION	WARRANTY APPLICATION	
	PARTS	LABOUR
Combustion chamber (welds only), castings and convector air-mate	Lifetime**	4 years
Plating* (defective manufacture) - subject to limitations above Ceramic glass (thermal breakage only*)	Lifetime**	N/A
Stainless steel firebox components, vermiculite, C-Cast or equivalent baffle* and secondary air tubes*, glass retainers and handle assembly	5 years**	3 years
Surrounds and heat shields, ash drawer, steel legs, pedestal and trim (aluminum extrusions)	5 years	N/A
Carbon steel firebox components	3 years	2 years
Blowers, heat sensors, switches, rheostat, wiring and electronics	2 years	1 year
Paint (peeling*), gaskets, insulations, refractory bricks (fireplace only**) and ceramic fibre blankets	1 year	N/A
All parts replaced under the warranty	90 days	N/A

Pictures required** ***Limited to one replacement

Labour cost and repair work to the account of the manufacturer are based on a predetermined rate schedule and must not exceed the wholesale price of the replacement part.

Shall your unit or a components be defective, contact immediately your **VENTIS** dealer. To accelerate processing of your warranty claim, make sure to have on hand the following information when calling:

- Your name, address and telephone number
- Bill of sale and dealer's name
- Installation configuration
- Serial number and model name as indicated on the nameplate fixed to the back of your unit
- Nature of the defect and any relevant information

Before shipping your unit or defective component to our plant, you must obtain an Authorization Number from your VENTIS dealer. Any merchandise shipped to our plant without authorization will be refused automatically and returned to sender.

Wood_Revision : May 2021

This document is available for free download on the manufacturer's website. It is a copyrighted document. Resale is strictly prohibited. The manufacturer may update this document from time to time and cannot be responsible for problems, injuries, or damages arising out of the use of information contained in any document obtained from unauthorized sources.

Stove Builder International inc.
250, rue de Copenhague,
St-Augustin-de-Desmaures (Québec) Canada
G3A 2H3
1-877-356-6663
https://www.occanada.com/ca/en/
tech@sbi-international.com