Wood Stove Owner's Manual

Part 2 of 2

INSTALLATION AND OPERATION REQUIREMENTS

HES140 N

(VB00027 model)

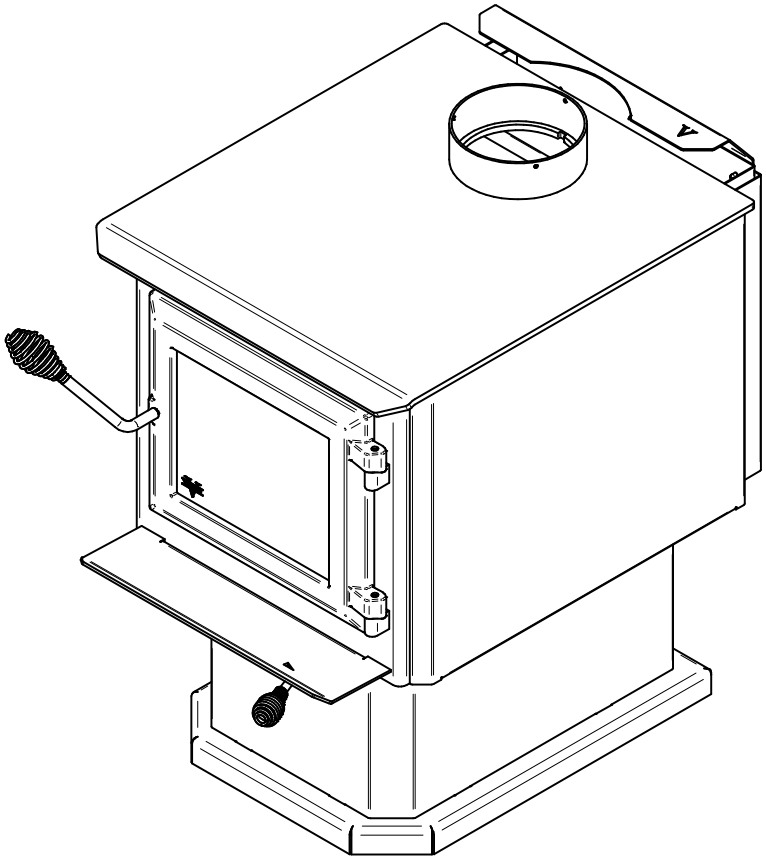

US Environmental Protection Agency phase II certified wood stove compliant with 2020 cord wood standard

EPA ≤2.5 g/h

Safety tested according to ULC S627, UL 1482 and UL 737 standards by an accredited laboratory.

ALCOVE

MOBILE HOME

ENGLISH

CONTACT LOCAL BUILDING OR FIRE OFFICIALS ABOUT RESTRICTIONS AND INSTALLATION INSPECTION REQUIREMENTS IN LOCAL AREA.

READ THIS ENTIRE MANUAL BEFORE INSTALLATION AND USE OF THIS WOOD STOVE. FAILURE TO FOLLOW THESE INSTRUCTIONS COULD RESULT IN PROPERTY DAMAGE, BODILY INJURY OR EVEN DEATH.

READ AND KEEP THIS MANUAL FOR REFERENCE

Printed in Canada

46437_IA
2026-09-23

Dealer: _____

_____

Installer: _____

_____

Phone Number: _____

Serial Number: _____

ONLINE WARRANTY REGISTRATION

If the unit requires repairs during the warranty period, proof of purchase must be provided. The purchase invoice must be kept. The date indicated on it establishes the warranty period. If it can not be provided, the warranty period will be determined by the date of manufacture of the product. It is also highly recommended to register the warranty online at

https://www.occanada.com/ca/en/warranty-registration/

Registering the warranty will help to quickly find the information needed on the unit.

TABLE OF CONTENTS

1. CERTIFICATION PLATE 4

2. General Information 6

2.1 Performances 6

2.2 Specifications 7

2.3 Dimensions 8

2.3.1 Stove Dimensions 8

2.3.2 Firebox Dimensions 9

2.4 EPA loading 10

2.4.1 Air control 10

2.4.2 Start-up phase 10

2.4.3 High Fire phase 12

2.4.4 Maintenance Fire phase 13

2.4.5 Low burn rate phase 13

3. Clearances to Combustible Material 15

3.1 Clearances 15

3.1.1 Parallel and Corner Installation 15

3.1.2 With Heat Shield AC02762 17

3.1.3 With Lowered Ceiling 18

3.1.4 Inside a Combustible Alcove 19

3.1.5 Mobile Home 19

3.1.6 Mobile Home With Heat Shield AC02762 20

4. Floor Protection 21

5. Reducing Wall and Ceiling Clearances Safely 22

5.1 Shield Construction Rules 22

6. Options Installation On Your Product 25

6.1 Optional Fresh Air Intake Kit Installation 25

6.2 Decorative Panels 26

6.3 Optional Fire Screen Installation 27

6.4 Optional Blower Thermodisc Installation (AC02023) 28

6.5 Air Tubes And Baffles Installation 29

6.6 Mobile Home Installation 31

7. Maintenance/Parts Replacement 32

7.1 Replacement 32

7.2 Gasket 33

7.3 Door 33

7.3.1 Door Alignment 34

7.3.2 Gasket 35

7.4 Replacing the log retainers 36

7.5 Combustion grate maintenance 37

8. Exploded Diagram and Parts List 38

VENTIS Limited Lifetime Warranty 41

ENGLISH

1. CERTIFICATION PLATE

REFER TO INTERTEK'S DIRECTORY OF BUILDING PRODUCTS (https://bpdirectory.intertek.com) FOR DETAILED INFORMATION
SE RÉFÉRER AU RÉPERTOIRE DES PRODUITS HOMOLOGUÉS D'INTERTEK (https://bpdirectory.intertek.com) POUR PLUS D'INFORMATION

C US LISTED

Intertek

February/Février 2026

Control Number (SA) : 4002461

STANDARDS / NORMES D'ESSAI:
Certified to/Certifié selon ULC S627
Certified to/Certifié selon UL 1482
Certified to/Certifié selon CSA B415.1
Certified to/Certifié selon ASTM E2515-11 (R2017)

LISTED SOLID FUEL BURNING APPLIANCE

POÊLE À COMBUSTIBLE SOLIDE HOMOLOGUÉ

MODEL / MODÈLE :

HES140 N

Serial Number
No. de Série

Clearances to combustibles / Dégagements aux combustibles

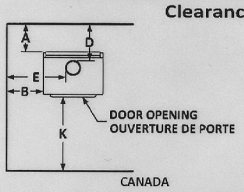

CANADA

Single wall connector Tuyau à paroi simple		Double wall connector Tuyau à paroi double	
A: 14 in./po.	(356 mm)	A: 8 in./po.	(203 mm)
B: 19 in./po.	(483 mm)	B: 15 in./po.	(381 mm)
C: 16 in./po.	(406 mm)	C: 12 in./po.	(305 mm)
D: 18 in./po.	(457 mm)	D: 11.25 in./po.	(286 mm)
E: 25 in./po.	(635 mm)	E: 21 in./po.	(533 mm)
F: 23 in./po.	(584 mm)	F: 18.875 in./po.	(479 mm)

Floor-ceiling/plancher-plafond: 84 in./po. (213cm)

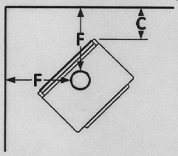

U.S.A.

Single wall connector Tuyau à paroi simple		Double wall connector Tuyau à paroi double	
A: 14 in./po.	(356 mm)	A: 8 in./po.	(203 mm)
B: 19 in./po.	(483 mm)	B: 15 in./po.	(381 mm)
C: 16 in./po.	(406 mm)	C: 12 in./po.	(305 mm)
D: 18 in./po.	(457 mm)	D: 11.25 in./po.	(286 mm)
E: 25 in./po.	(635 mm)	E: 21 in./po.	(533 mm)
F: 23 in./po.	(584 mm)	F: 18.875 in./po.	(479 mm)

MOBILE HOME
MAISONS MOBILES
Double wall connector
Tuyau à paroi double

A: 11 in./po.	(279 mm)	D: 14.25 in./po.	(362 mm)
B: 19 in./po.	(483 mm)	E: 25 in./po.	(635 mm)
C: 14 in./po.	(356 mm)	F: 20.875 in./po.	(530 mm)

* See owner's manual for other clearances with lowered ceiling/
voir manuel d'installation pour autres dégagements avec plafond abaissé

Back / Arrière

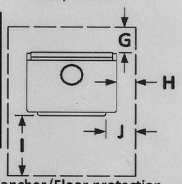

Protection de plancher/Floor protection

CANADA		U.S.A.	
G: 8 in./po.	(203 mm)	I: 16 in./po.	(406 mm)
H: 8 in./po	(203 mm)	J: 8 in./po.	(203 mm)
I: 18 in./po.	(457 mm)	K: 36 in./po.	(914 mm)
K: 48 in./po.	(1219 mm)		

PREVENT HOUSE FIRES

- Install and use only in accordance with the manufacturer's installation and operating instructions.
- Contact local building or fire officials about restrictions and installation inspection in your area.
- Use listed 152 mm /6 in. diameter single or double wall connectors with prefabricated chimneys approved UL 103 HT (US) and ULC S629 (CAN) suitable for solid fuels or lined masonry chimneys.
- See local building code and manufacturer's instructions for precautions required for passing a chimney through a combustible wall or ceiling.
- This stove must be installed as a freestanding heater with the clearances listed in the manufacturer's installation instructions. It is strictly forbidden to install this stove in a factory-built fireplace.
- The space heater must be installed with the pedestal provided.
- Do not pass connector through combustible wall or ceiling.
- Do not connect this unit to a chimney serving another appliance.
- For use with solid fuel only. Do not use other fuels.
- Operate only with door closed or door open with firescreen installed. Open door or remove firescreen to feed the stove only.
- Do not obstruct the space underneath the stove.
- Do not use grate or elevate fire. Build fire directly on hearth.
- Do not overfire. If heater or chimney connector glows, you are overfiring.
- Inspect and clean chimney frequently. Under certain condition of use, creosote buildup may occur rapidly.
- Replace glass with ceramic type only.
- Install unit on a non-combustible material extending as shown above on this label.
- Suitable for mobile-home installation.
- Combustion air openings shall not be obstructed.
- This wood heater needs periodic inspection and repair for proper operation. Consult the owner's manual for further information. It is against US federal regulations to operate this wood heater in a manner inconsistent with the operating instructions in the owner's manual.

PRÉVENEZ LES INCENDIES

- Installer et utiliser conformément au manuel d'utilisation du fabricant.
- Contacter les autorités de votre localité ayant juridiction concernant les restrictions et inspections d'installation.
- Utiliser des tuyaux d'évacuation à parois simple ou double homologués d'un diamètre de 6 po. (152 mm) avec une cheminée préfabriquée approuvée UL 103 HT (US) et ULC S629 (CAN) pour utilisation au bois ou une cheminée de maçonnerie gainée.
- Voir les codes locaux et le manuel d'installation du manufacturier pour le passage de la cheminée à travers un mur ou un plafond combustible.
- Ce poêle doit être installé comme appareil de chauffage autonome avec les dégagements indiqués dans les instructions d'installation du fabricant. Il est strictement défendu d'installer ce poêle dans un foyer préfabriqué.
- Le poêle doit être installé avec le piédestal fournis..
- Ne pas traverser un plafond ou un mur combustible avec un tuyau d'évacuation.
- Ne pas raccorder cet appareil à une cheminée déservant un autre appareil.
- Pour l'usage avec du combustible solide seulement. Ne pas utiliser d'autres combustibles.
- Garder la porte fermée ou le pare-étincelle en place en tout temps. Ouvrir la porte ou retirer le pare-étincelle que lors du chargement.
- Ne rien entreposer sous l'appareil.
- Ne pas utiliser de grilles ou de chenets pour surélever le feu.Préparer le feu directement sur l'âtre.
- Ne pas surchauffer. Si l'appareil ou le tuyau rougit, il y a surchauffe.
- Inspecter et nettoyer la cheminée fréquemment. Sous certaines conditions, l'accumulation de créosote peut être rapide.
- Remplacer la vitre seulement avec un verre de céramique.
- Installer l'appareil sur une plaque non combustible tel qu'indiqué sur l'étiquette.
- Poêle approuvé pour maison mobile.
- Les entrées d'air servant à la combustion ne doivent pas être obstruées.
- Cet appareil de chauffage requiert des inspections et réparations périodiques. Consulter le manuel de l'utilisateur pour plus d'information. Opérer cet appareil de chauffage de façon inconsistente par rapport au manuel de l'utilisateur consiste une violation de la loi fédérale (USA).

Optional blower: AC02050 (115V, 0.8A, 60Hz)
Option ventilateur: AC02050 (115V, 0.8A, 60Hz)

U.S. ENVIRONMENTAL PROTECTION AGENCY Certified to comply with 2020 particulate emission standards using cordwood.
AGENCE DE PROTECTION DE L'ENVIRONNEMENT DES É.-U. Conforme aux normes d'émission de particules de 2020 avec bûche de bois.

Weighted average emission rate / Moyenne pondérée des émissions : 1.7 g/h

Tested and certified in compliance with CFR 40 part 60, subpart AAA, section 60.534(a)(1(ii))

WARNING: This product can expose you to carbon monoxide, which is known to the State of California to cause cancer, birth defects or other reproductive harm. (For more information go to www.p65warnings.ca.gov)

CAUTION

- HOT WHILE IN OPERATION.
- DO NOT TOUCH. KEEP CHILDREN, CLOTHING AND FURNITURE AWAY.
- CONTACT MAY CAUSE SKIN BURNS. SEE NAME-PLATE AND INSTRUCTIONS.

ATTENTION

- CHAUD EN FONCTIONNEMENT.
- NE PAS TOUCHER. GARDER LES ENFANTS, LES VÊTEMENTS ET LES MEUBLES ÉLOIGNÉS.
- UN CONTACT AVEC LA PEAU PEUT OCCASIONNER DES BRÛLURES. VOIR LES INSTRUCTIONS.

37XXX

VENTIS

St-Augustin-de-Desmaures, (Qc), Canada
24/02/2026 (# Test)

St-Augustin-de-Desmaures, (Qc), Canada
24/02/2026 (# Test)

ENGLISH

ENGLISH

2. General Information

2.1 Performances

Values are as measured per test method, except for the recommended heating area, firebox volume, maximum burn time and maximum heat output.

Model	HES140 N (VB00027)
Combustion type	Non-catalytic
Fuel Type	Dry Cordwood
Recommended heating area (sq. ft.)[1]	250 to 1,200 ft^2 (23 to 111 m^2)
Overall firebox volume[2]	1.85 ft^3 (0.0524 m^3)
EPA loading volume	1.67 ft^3 (0.0473 m^3)
Maximum burn time[1]	5 hours
Maximum heat output (dry cordwood)[3]	75,000 BTU/h (21.98 kW)
Overall heat output rate (min. to max.)[4]	18,782 BTU/h to 71,262 BTU/h (5.504 kW to 20.88 kW)
Average overall efficiency[4] (Dry cordwood)	74 % (HHV)[5]
Optimum efficiency[6]	81 % (LHV)
Optimum heat transfer efficiency[7]	78 % (HHV)
Average particulate emissions rate[8]	1.7 g/h (EPA / CSA B415.1-10)[9]
Average CO[10]	1.3 g/min

ENGLISH

[1] Recommended heating area and maximum burn time may vary subject to location in home, chimney draft,heat loss factors, climate, fuel type and other variables. The recommended heated area for a given appliance is defined by the manufacturer as its capacity to maintain a minimum acceptable temperature in the designated area in case of a power failure.
[2] The overall firebox calculation is an approximation and is not intended to be used for loading. This volume includes a buffer zone to allow an easier fuel insertion, prevent ash spillage and allow the air wash to work properly.
[3] The maximum heat output (dry cordwood) is based on a loading density varying between 15 lb/ft^3 and 20 lb/ft^3 and reloading intervals ranging from 60 to 120 minutes. Other performances are based on a fuel load prescribed by the standard without any reloading between start and finish. The specified loading density varies between 7 lb/ft^3 and 12 lb/ft^3. The moisture content is between 19% and 25%.
[4] As measured per CSA B415.1-10 stack loss method.
[5] Higher Heating Value of the fuel.
[6] Optimum overall efficiency at a specific burn rate (LHV).
[7] The optimum heat transfer efficiency is for the low burn rate and represents the appliance's ability to convert the energy contained in the wood logs into energy transferred to the room in the form of heat and does not take into account the chemical losses during combustion.
[8] This appliance is officially tested and certified by an independent agency.
[9] Tested and certified in compliance with CFR 40 part 60, subpart AAA, section 60.534(a)(1(ii).
[10] Carbon monoxide.

2.2 Specifications

Maximum log length[11]	17 in (432 mm) north-south
Flue outlet diameter	6 in (150 mm)
Recommended connector pipe diameter	6 in (150 mm)
Type of chimney	ULC-S629, UL 103 HT (2100 °F)
Minimum chimney height	12 feet
Baffle material	Vermiculite
Approved for alcove installation	Yes
Approved for mobile home installation[12]	Yes
Type of door	Single, glass with cast iron frame
Type of glass	Ceramic glass
Blower	Optional (up to 100 CFM)
Particulate emission standard[13]	EPA / CSA B415.1-10

ENGLISH

[11] North-south: ends of the logs visible, East-west: sides of the logs visible.

[12] Mobile homes (Canada) or manufactured homes (USA): The US Department of Housing and Urban Development describes “manufactured homes” better known as “mobile homes” as follows; buildings built on fixed wheels and those transported on temporary wheels/axles and set on a permanent foundation. In Canada, a mobile home is a dwelling for which the manufacture and assembly of each component is completed or substantially completed prior to being moved to a site for installation on a foundation and connection to service facilities and which conforms to the CAN/CSA-Z240 MH standard.

[13] Tested and certified in compliance with CFR 40 part 60, subpart AAA, section 60.534(a)(1(ii).

2.3 Dimensions

2.3.1 Stove Dimensions

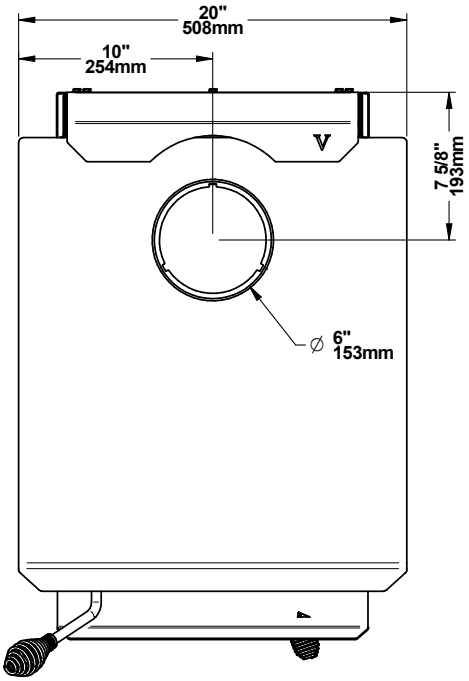

Figure 1: Top View

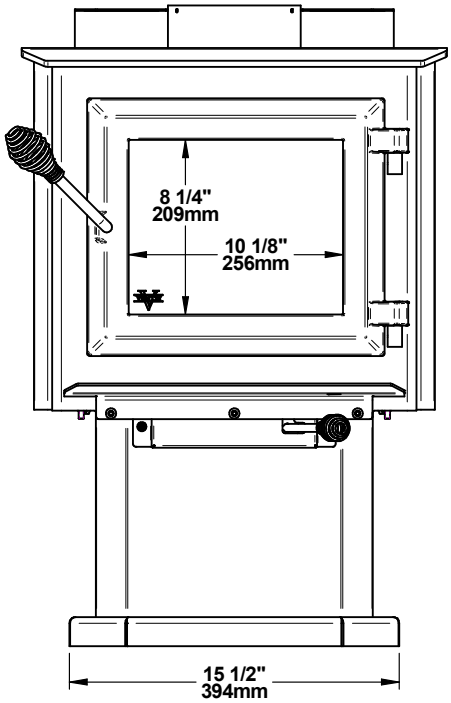

Figure 2: Front View

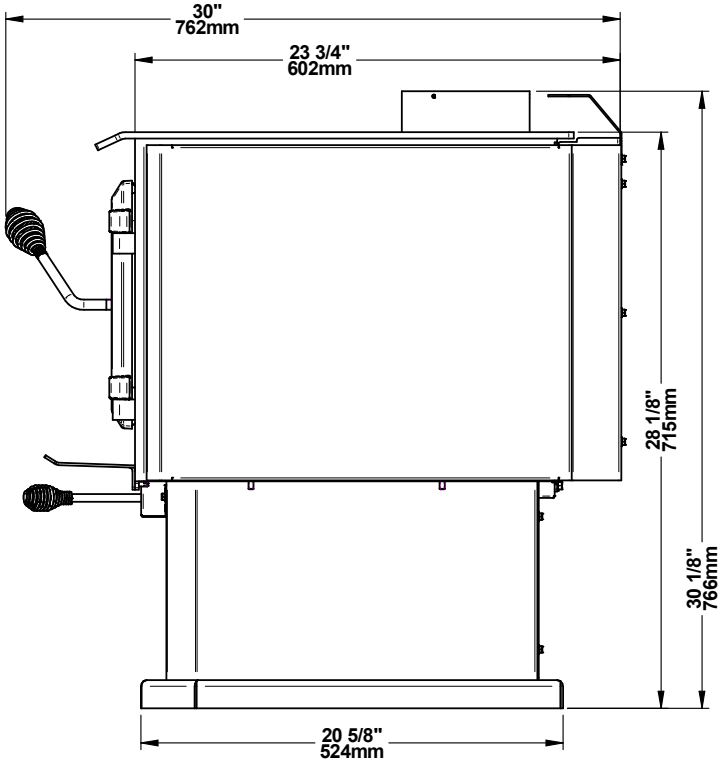

Figure 3: Side View

ENGLISH

2.3.2 Firebox Dimensions

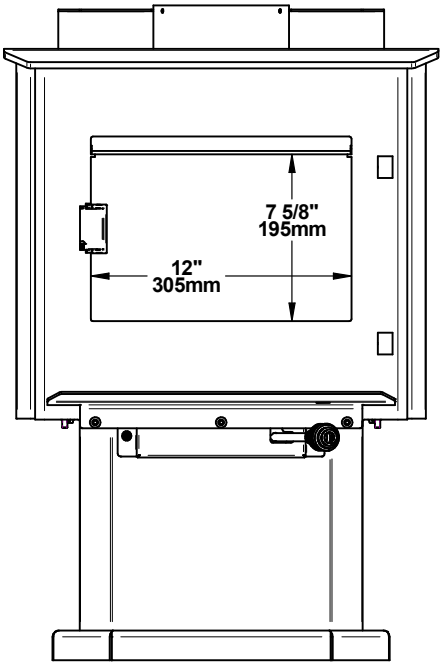

Figure 4: Door Opening

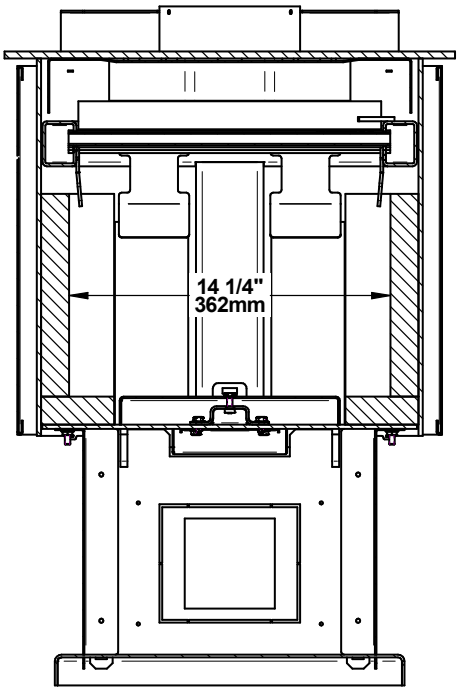

Figure 5: Front View - Firebox

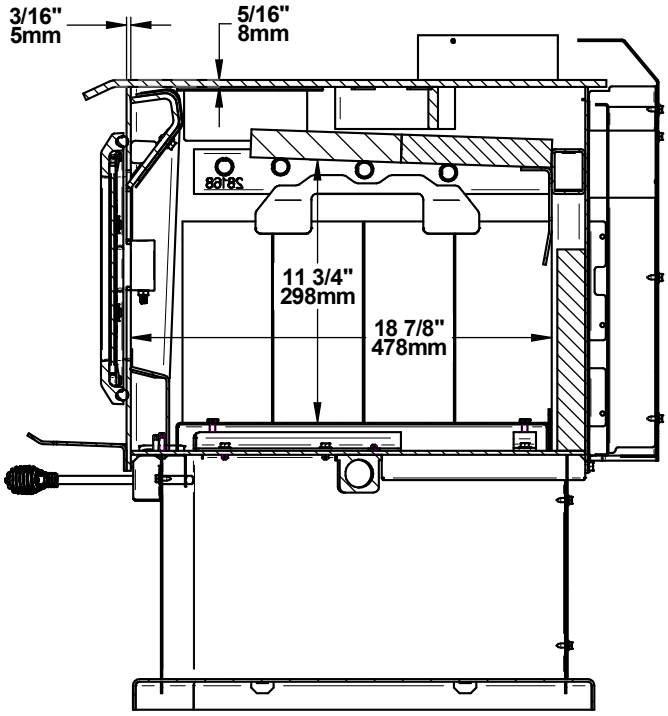

Figure 6: Side View - Firebox

ENGLISH

2.4 EPA loading

The charging methods shown below are those that were used during emissions certification.

2.4.1 Air control

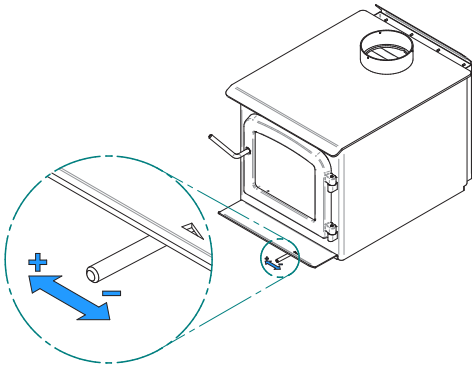

The air control is located underneath the ash shelf. To open the air control, push the air control handle completely to the left (High). This will increase the burn rate. To close the air control, push the air control handle completely to the right (Low). This will decrease the burn rate.

2.4.2 Start-up phase

The air control needs to be fully open. Place two newspaper sheets on the bottom of the firebox and carefully criss-cross 12 kindling pieces of 1" x 1" (2.5 cm x 2.5 cm) approximately over the paper in the middle of the firebox. For the best ignition, use three of the largest kindling pieces to support the rest of the kindling pieces. Put those three kindling pieces in a North-South orientation and set them on the “door step,” as shown in the picture below. This allows enough space for the paper under the kindling pieces for better paper ignition.

The nine smaller kindling pieces must be placed at approximately a 45-degree angle on three layers. The first layer is built with smaller pieces, and the other layers over it are built with larger kindling pieces. In general, leave some air space between each kindling piece and make sure that fuel pieces are not in contact with the firebricks.

ENGLISH

The kindling pieces need to be dry, with a moisture content of about 10%. To achieve such a dry condition, we recommend splitting kindling pieces at least two weeks in advance and letting them dry in a criss-cross stack, then keeping them indoors at ambient temperature and low relative humidity. The best practice is to prepare two stacks first and rotate them so one stack can dry while the other is being used.

The start-up fuel configuration refers to the picture below. Place four start-up pieces over the kindling pieces, in a single layer, in a North-South configuration. Leave air space between each piece. Basically, for a good and fast ignition, you need to allow the flames to pass all around each wood piece. Make sure the four start-up pieces are positioned over the “door step,” like the first three kindling pieces. This practice ensures that primary air will easily flow under the fuel load during the combustion process.

For efficient ignition, using a propane torch is better than a small lighter. **Very important to always use a hose, keeping the propane bottle away from the flame and heat.** Using the torch, ignite the paper slightly and then ignite the middle of the kindling load for about 30 seconds, until intense flames are present all around the start-up fuel pieces. Close the door very slowly until there is approximately one inch between the door and the stove body. Keep the firebox full of flames for two or three minutes, then close the door when the flames are rolling rapidly above the fuel load. A fast and very hot ignition will ensure efficient combustion. Keep the air control fully open.

2.4.3 High Fire phase

The best time to start this phase is when there is has a small coal bed, some fuel pieces are not completely burned, and there are still flames in the firebox. The air control setting should be fully open. This high-fire phase is intended to quickly heat an area shortly after the start-up phase or when restarting the appliance.

The high-fire load configuration can be made with four medium cordwood pieces of approximately 2.5 in. x 4.5 in. (6 cm x 11 cm). Refer to the picture below for a wood load configuration allowing optimized ignition followed by stable and clean combustion. In general, medium wood pieces with a moisture content between 19% and 25% (dry basis) should be configured in a more compact arrangement (limited air space between each piece). However, larger wood pieces with higher moisture content should be configured with more air space between each piece. The blower (if equipped) can be turned ON at the beginning of the high-fire phase.

Following the start-up phase, when the flames start to reduce in intensity, open the door and make sure all fuel pieces are positioned over the combustion grate to maximize wood ignition. Place the first two pieces in a North-South configuration in the middle of the firebox without touching the refractory panels. The two other pieces should be added on top of the first two, stacked in the middle in a North-South orientation (refer to the picture above). Close the door immediately after loading. Keep the air control fully open for about half an hour. This represents approximately the point when 50% of the load has been consumed. At this time, the firebox has reached its maximum temperature, and the flames are just beginning to reduce in intensity. The air control can be fully or partially closed at that point.

ENGLISH

2.4.4 Maintenance Fire phase

This phase is a period during which the fire is maintained with a medium-sized coal bed and a smaller batch of wood, normally made of two or three large cordwood pieces. The goal is to maintain consistent heat output. The maintenance-fire load configuration is made with two large fuel pieces of approximately 4 in. x 6 in. (10 cm x 15 cm).

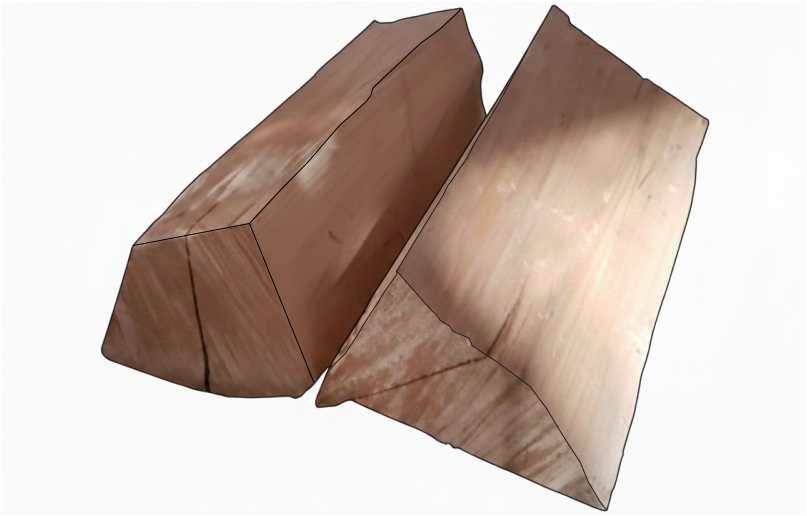

Following the high-fire phase, when only faint flames remain and most of the wood has turned into coal, fully open the air control and open the door. The two wood pieces can be placed directly over the coal bed. It is not required to stir the coal bed unless there is not enough space in the firebox. Place the two pieces in a North-South orientation in the middle of the firebox, without touching the refractory panels (sides and back), and as far as possible from the door glass. Keep approximately one inch between the two pieces. Then close the door and keep the air control fully open until intense flames are present all around the fuel pieces (approximately five minutes). The air control can be fully closed from that point. Make sure the flames do not disappear 10 to 15 minutes after closing the air control. The blower (if equipped) can be turned ON at that point.

2.4.5 Low burn rate phase

This phase is a period when the stove has a large coal bed, the stove is fully loaded, and the adjustable air settings are set to produce the lowest possible burn rate. This phase is intended to maintain heat over a long period of time, such as overnight or while away for extended periods. The low-burn rate load configuration is made with three large cordwood pieces of approximately 4 in. x 6 in. (10 cm x 15 cm) and three small cordwood pieces of approximately 2.5 in. x 4.5 in. (6 cm x 11 cm). The load configuration is North-South. Following the maintenance-fire phase, when only faint flames remain (or no flames at all) and most of the wood has turned into coal, fully open the air control and open the door. Stir the coals to ensure ease of wood loading. For optimal loading, place the large wood pieces on the coal bed (first layer) and the small pieces over the large pieces in the firebox, as shown in the picture below.

In general, for a large wood load operated at a low burn rate, maintain air gaps between each wood piece for faster ignition and efficient combustion. Place the pieces in a North-South orientation in the middle of the firebox, without touching the refractory panels (sides and back), and as far as possible from the door glass. Leave the door cracked open by about one inch for approximately four minutes. Allow the flames to increase in intensity on each side of the wood load and make sure the top of the wood load (near the secondary air tubes) is fully ignited, then close the door. Keep the air control fully open for another six minutes, then close it partially or completely after that period. The blower (if equipped) can be turned ON at that point.

ENGLISH

3. Clearances to Combustible Material

The clearances shown in this section have been determined by tests according to procedures set out in safety standards ULC S627 (Canada), UL 1482 (USA) and UL 737 (USA). When the stove is installed so that its surfaces are at or beyond the minimum clearances specified, combustible surfaces will not overheat under normal and even abnormal operating conditions.

No part of the stove or flue pipe may be located closer to combustibles than the minimum clearance figures given.

Clearances may only be reduced by means approved by the regulatory authority.

The clearances to combustible walls may be slightly different in Canada and the USA and may also differ depending on whether single or double wall flue pipe is used. Make sure to choose the correct clearance for the stove location and type of flue pipe.

The clearances of the appliance and the flue pipes must be met individually, meaning the appliance cannot be installed closer to the combustible materials than the single or double wall pipe allows. For a safe way to reduce clearances refer to section "5. Reducing Wall and Ceiling Clearances Safely", page 22.

3.1 Clearances

3.1.1 Parallel and Corner Installation

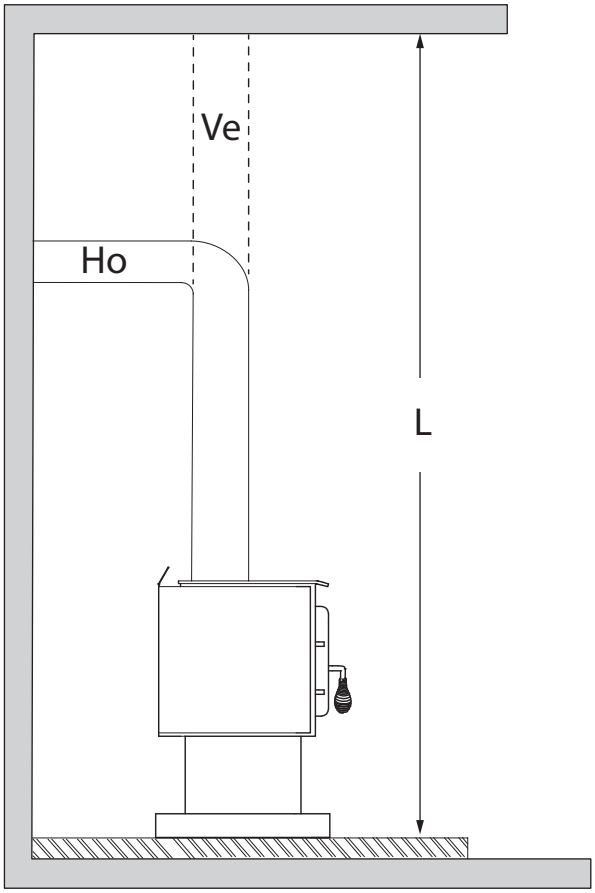

Figure 7: Clearances - Ceiling

ENGLISH

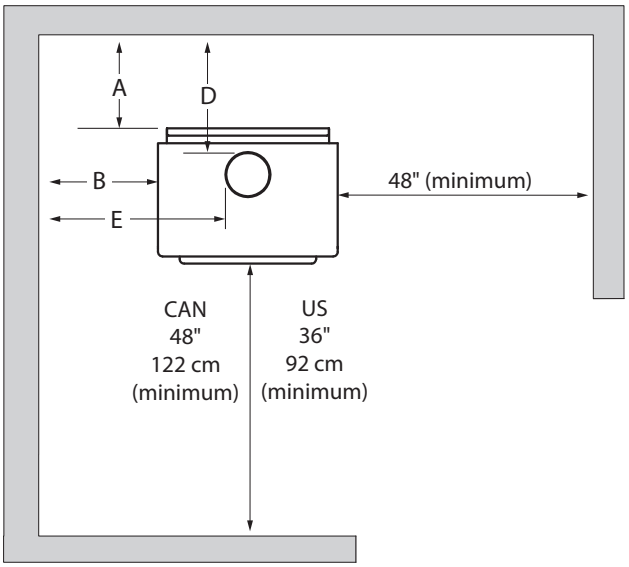

Figure 8: Clearances - Top View

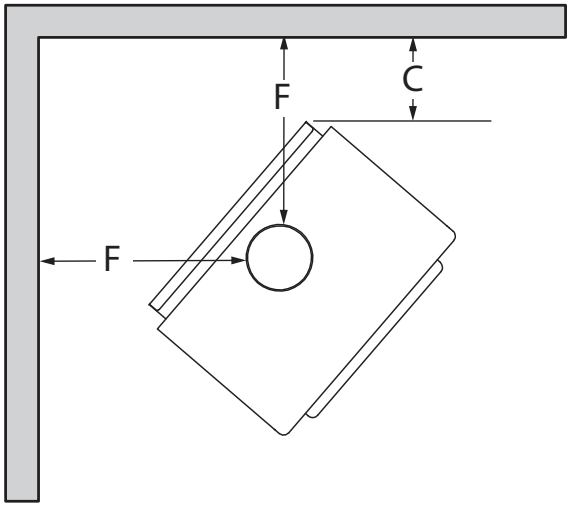

Figure 9: Clearances - Corner

	APPLIANCE CLEARANCES WITH SINGLE WALL PIPE CONNECTOR	
	Canada	**USA**
A	14" (356 mm)	14" (356 mm)
B	19" (483 mm)	19" (483 mm)
C	16" (406 mm)	16" (406 mm)
L	84" (2134 mm)	84" (2134 mm)

	APPLIANCE CLEARANCES WITH DOUBLE WALL PIPE CONNECTOR	
	Canada	**USA**
A	8" (203 mm)	8" (203 mm)
B	15" (381 mm)	15" (381 mm)
C	12" (305 mm)	12" (305 mm)
L	84" (2134 mm)	84" (2134 mm)

If the above clearances are met, then the distances measured from the flue outlet will be:

	DISTANCES[14] FROM PIPE CONNECTOR WITH SINGLE WALL PIPE CONNECTOR	
	Canada	**USA**
D	18" (457 mm)	18" (457 mm)
E	25" (635 mm)	25" (635 mm)
F	23" (584 mm)	23" (584 mm)

	DISTANCES[14] FROM PIPE CONNECTOR WITH DOUBLE WALL PIPE CONNECTORE	
	Canada	**USA**
D	11 ¼" (286 mm)	11 ¼" (286 mm)
E	21" (533 mm)	21" (533 mm)
F	18 7/8" (479 mm)	18 7/8" (479 mm)

ENGLISH

[14] The pipe distances listed in this table refer to the distances obtained when the stove is installed in accordance with the appliance clearances above mentioned.

3.1.2 With Heat Shield AC02762[15]

To reduce the clearances of an appliance using a single wall pipe connector, the use of a heat shield certified with the single wall pipe connector to be used as close as 6" from combustible materials must be used. Only in this case, the same clearances as a certified double wall pipe connector can be used. Refer to the booklet present in the screen options to obtain the dimensions to be respected.

	APPLIANCE CLEARANCES WITH DOUBLE WALL PIPE CONNECTOR	
	Canada	**USA**
A	3" (76 mm)	3" (76 mm)
B	3" (76 mm)	3" (76 mm)
C	3" (76 mm)	3" (76 mm)
L	84" (2134 mm)	84" (2134 mm)

	DISTANCES[16] FROM DOUBLE WALL PIPE CONNECTOR	
	Canada	**USA**
D	6 ¼" (159 mm)	6 ¼" (159 mm)
E	9" (229 mm)	9" (229 mm)
F	9 7/8" (251 mm)	9 7/8" (251 mm)

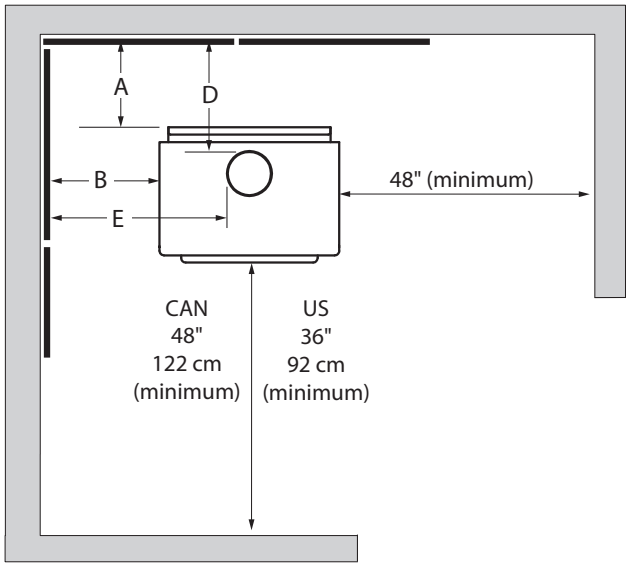

Figure 10: Clearances - Sheilded Top View

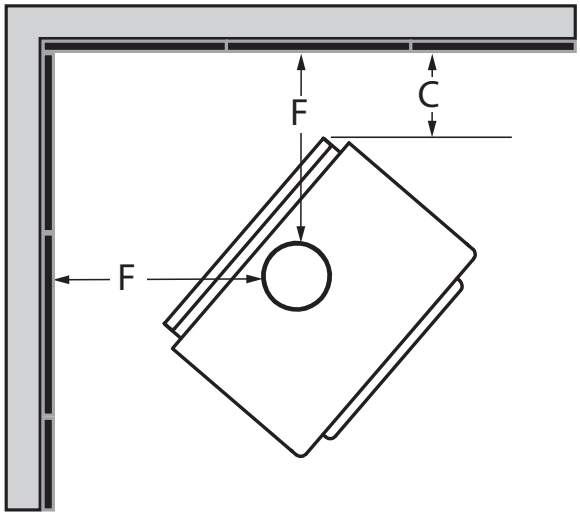

Figure 11: Clearances - Sheilded Corner

If the clearance reduction is on the same side as the door handle, position the stove at a minimum of 6 inches from the side wall (clearance B), otherwise it may be located at the clearance shown in the table above.

ENGLISH

[15] Note that to reduce the clearances of an appliance using a single wall pipe connector, the use of a heat shield certified with the single wall pipe connector to be used as close as 6" from combustible materials must be used. Only in this case, the same clearances as a certified double wall pipe connector can be used.

[16] The pipe distances listed in this table refer to the distances obtained when the stove is installed in accordance with the appliance clearances above mentioned.

3.1.3 With Lowered Ceiling

	APPLIANCE CLEARANCES WITH SINGLE WALL PIPE CONNECTOR	
	Canada	**USA**
A	14" (356 mm)	14" (356 mm)
B	20" (508 mm)	20" (508 mm)
C	16" (406 mm)	16" (406 mm)
L	76" (1930 mm)	76" (1930 mm)

	APPLIANCE CLEARANCES WITH DOUBLE WALL PIPE CONNECTOR	
	Canada	**USA**
A	9" (229 mm)	9" (229 mm)
B	17" (432 mm)	17" (432 mm)
C	14" (356 mm)	14" (356 mm)
L	76" (1930 mm)	76" (1930 mm)

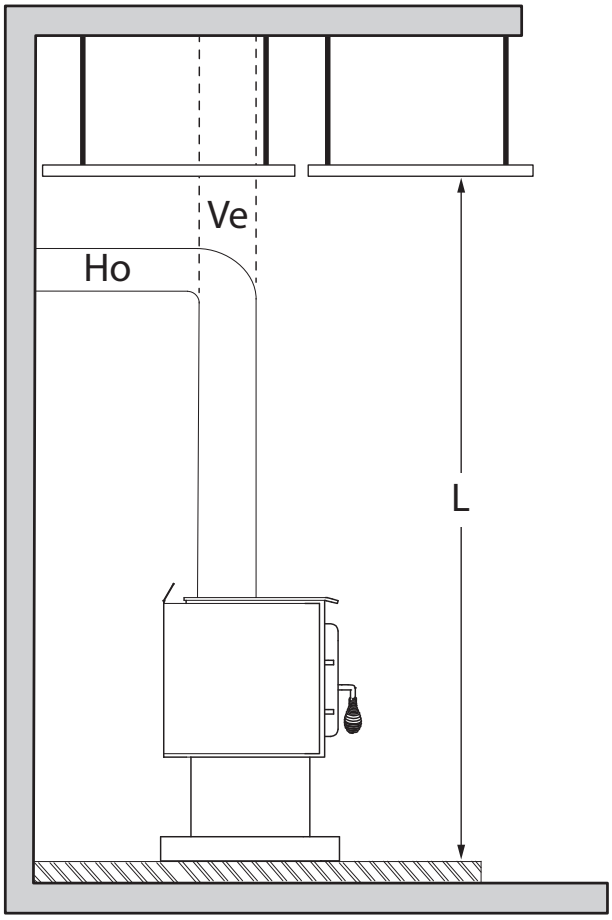

Figure 12: Clearances - Ceiling

If the above clearances are met, then the distances measured from the flue outlet will be:

	DISTANCES[17] FROM PIPE CONNECTOR WITH SINGLE WALL PIPE CONNECTOR	
	Canada	**USA**
D	18" (457 mm)	18" (457 mm)
E	26" (660 mm)	26" (660 mm)
F	23" (584 mm)	23" (584 mm)

	DISTANCES[17] FROM PIPE CONNECTOR WITH DOUBLE WALL PIPE CONNECTOR	
	Canada	**USA**
D	12 ¼" (311 mm)	12 ¼" (311 mm)
E	23" (584 mm)	23" (584 mm)
F	20 7/8" (530 mm)	20 7/8" (530 mm)

ENGLISH

[17] The pipe distances listed in this table refer to the distances obtained when the stove is installed in accordance with the appliance clearances above mentioned.

3.1.4 *Inside a Combustible Alcove*

See section 3.1 for single wall pipe installation.

	APPLIANCE CLEARANCES WITH DOUBLE WALL PIPE CONNECTOR	
	Canada	**USA**
A	9" (229 mm)	9" (229 mm)
B	17" (432 mm)	17" (432 mm)
K	48" (1219 mm)	36" (914 mm)
L	76" (1930 mm)	76" (1930 mm)

	DISTANCES[18] FROM PIPE CONNECTOR WITH DOUBLE WALL PIPE CONNECTOR	
	Canada	**USA**
D	12 ¼" (311 mm)	12 ¼" (311 mm)
E	23" (584 mm)	23" (584 mm)

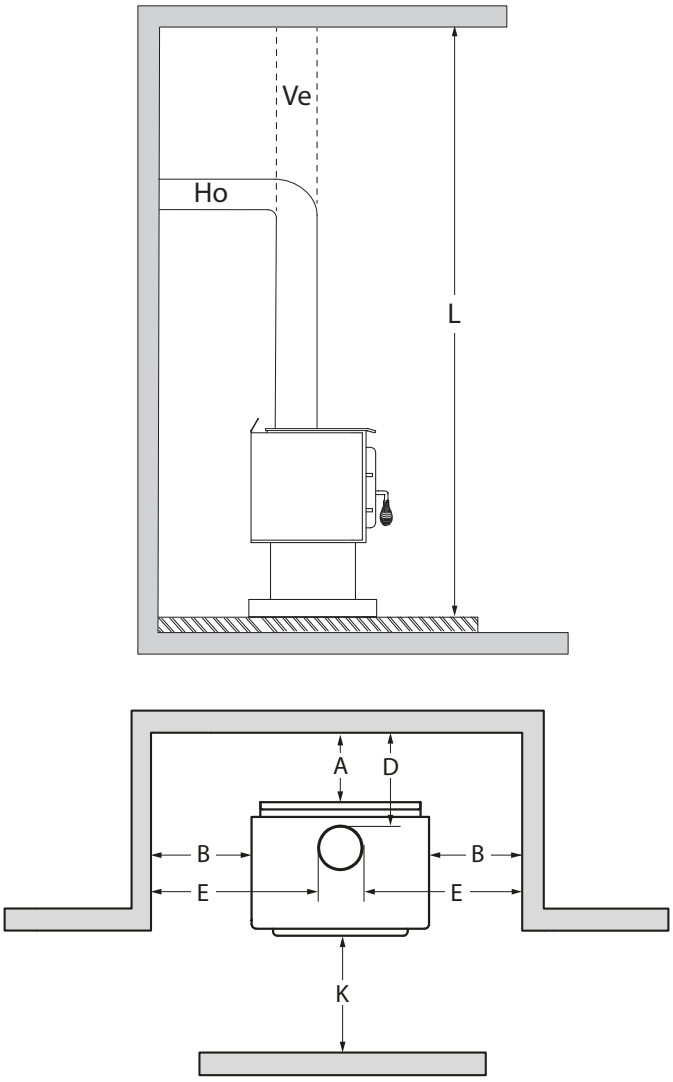

Figure 13: Clearances -Alcove

3.1.5 *Mobile Home*

It is strictly **forbidden** to install a unit with **a single wall pipe** in a **mobile home**.

	APPLIANCE CLEARANCES WITH DOUBLE WALL PIPE CONNECTOR	
	Canada	**USA**
A	11" (279 mm)	11" (279 mm)
B	19" (483 mm)	19" (483 mm)
C	14" (356 mm)	14" (356 mm)
L	84" (2134 mm)	84" (2134 mm)

	DISTANCES[18] FROM PIPE CONNECTOR WITH DOUBLE WALL PIPE CONNECTOR	
	Canada	**USA**
D	14 ¼" (362 mm)	14 ¼" (362 mm)
E	25" (635 mm)	25" (635 mm)
F	20 7/8" (530 mm)	20 7/8" (530 mm)

[18] The pipe distances listed in this table refer to the distances obtained when the stove is installed in accordance with the appliance clearances above mentioned.

ENGLISH

3.1.6 Mobile Home With Heat Shield AC02762

It is strictly **forbidden** to install a unit with **a single wall pipe** in a **mobile home**.

	APPLIANCE CLEARANCES WITH DOUBLE WALL PIPE CONNECTOR	
	Canada	**USA**
A	3" (76 mm)	3" (76 mm)
B	3" (76 mm)	3" (76 mm)
C	3" (76 mm)	3" (76 mm)
L	84" (2134 mm)	84" (2134 mm)

	DISTANCES[19] FROM PIPE CONNECTOR WITH DOUBLE WALL PIPE CONNECTOR	
	Canada	**USA**
D	6 ¼" (159 mm)	6 ¼" (159 mm)
E	9" (229 mm)	9" (229 mm)
F	9 7/8" (251 mm)	9 7/8" (251 mm)

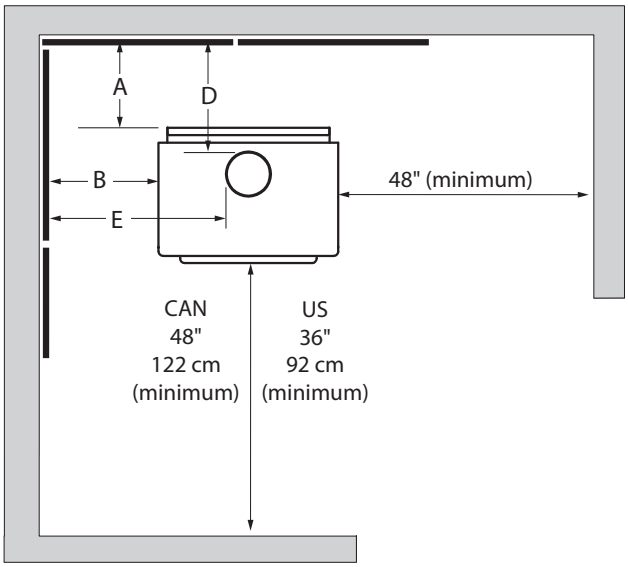

Figure 14: Clearances - Sheilded Top View

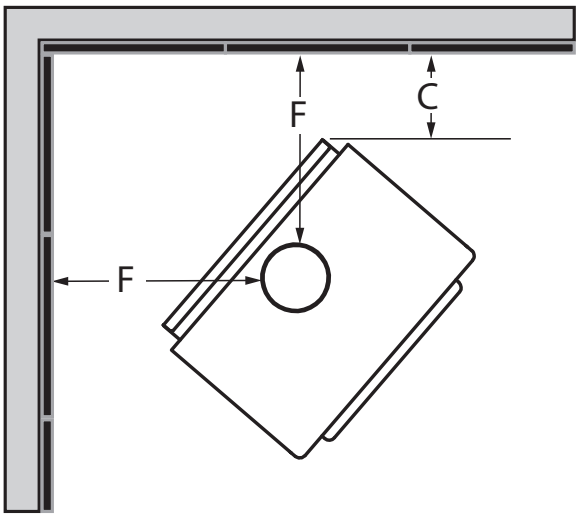

Figure 15: Clearances - Sheilded Corner

If the clearance reduction is on the same side as the door handle, position the stove at a minimum of 6 inches from the side wall (clearance B), otherwise it may be located at the clearance shown in the table above.

ENGLISH

[19] The pipe distances listed in this table refer to the distances obtained when the stove is installed in accordance with the appliance clearances above mentioned.

4. Floor Protection

This stove is meeting the requirements of CAN/ULC-S627 and is suitable for installation on a combustible floor. However, it must be placed on a non-flammable surface to protect the floor from hot embers that may fall during loading.

The floor protection must be a continuous, non combustible material, such as steel with a minimum thickness of 0.015" (0.38 mm) or ceramic tiles sealed together with grout. Cement board, brick, or any other approved or listed material suited for floor protection. No R factor required.

Any type of tile will require a continuous non combustible sheet beneath to prevent the possibility of embers falling through to the combustible floor if cracks or separation should occur in the finished surface. Check local codes for approved alternatives. No protection is required if the unit is installed on a non-combustible floor (ex: concrete).

	FLOOR PROTECTION	
	Canada	**USA**
G[20]	8" (203 mm)	N/A
H	8" (203 mm)	N/A
I	18" (457 mm) From door opening	16" (203 mm) From door opening
J	N/A	8" (203 mm)
K	34 ½" (876 mm)	31 ¼ (794 mm)
N[21]	N/A	See note 21
S	48 ¾" (1238 mm)	38 ¾" (984 mm)
T	34 ½" (876 mm)	27 ½" (698 mm)
U	34 ½" (876 mm)	31 ¼ (794 mm)
V	66" (1676 mm)	54 3/8" (1381 mm)

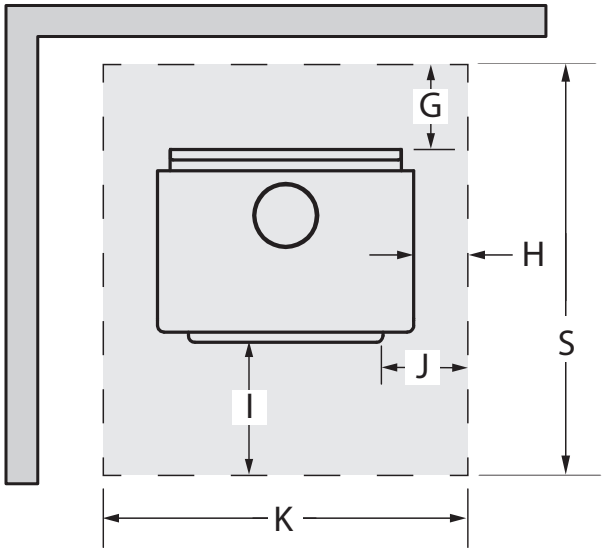

Figure 16: Floor Protection

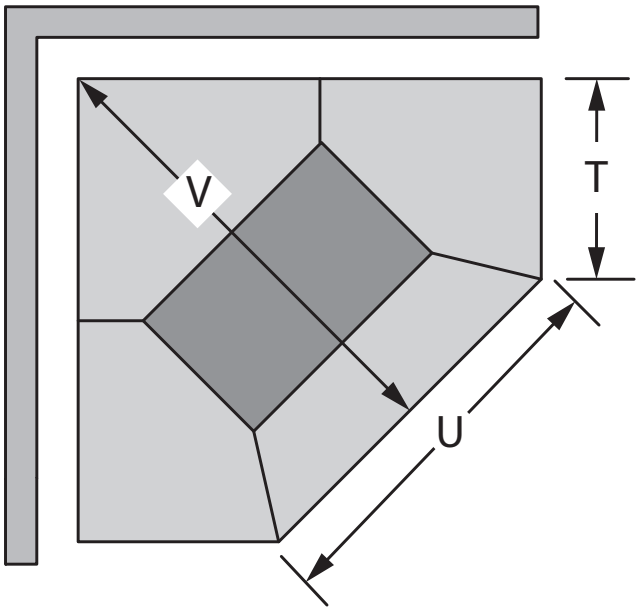

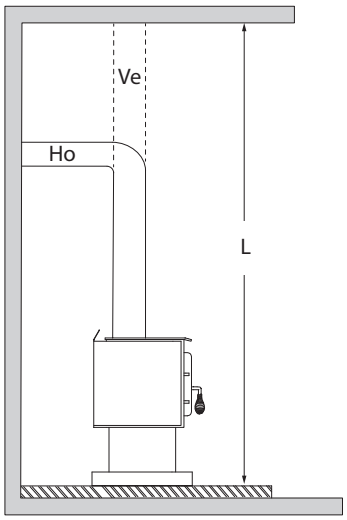

ENGLISH

[20] The floor protection at the back of the stove is limited to the stove's required clearance if such clearance is smaller than 8 inches (203 mm).
[21] Only required under the horizontal section (Ho) of the connector. Must exceed each side of the connector by at least 2 inches (51 mm).

5. Reducing Wall and Ceiling Clearances Safely

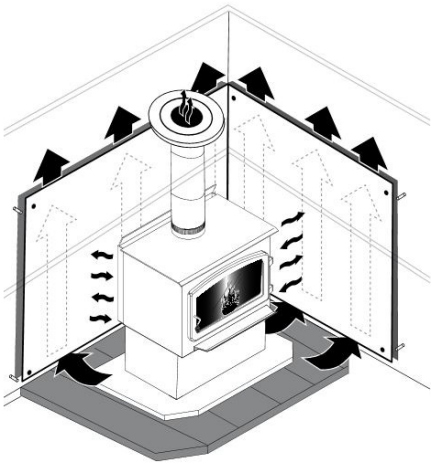

It is often desired to use as little space as possible when installing a wood stove. To do this, it is possible to reduce the clearances safely and install the stove closer to the walls by permanently installing a heat shield between the stove and the flammable material.

The rules for heat shields are sometimes complicated. Read and apply the instructions carefully. Some regions may have different regulations. Consult the local building code or contact the fire department for restrictions, inspection and installation requirements in the area.

5.1 Shield Construction Rules

- Adhesives used in shield construction must not ignite or lose adhesive qualities at temperatures likely to be encountered.
- Mounting hardware which extends from the shield surface into combustibles may be used only at the edges of the shield.
- Mounting hardware must allow full vertical ventilation.

A) Minimum clearance between the appliance top and an unshielded combustible ceiling (for a ceiling 72" from the floor): 45 ¼" (1149 mm)

B) Shield extension above the appliance: 20" (500 mm)

C) Minimum space behind the shield: 1" (25 mm) in USA and 7/8" (21 mm) in Canada

D) Clearance along the bottom of the shield: minimum 1" (25 mm) and maximum 3" (75 mm)

E) Minimum clearance along the top of the shield: 3" (75 mm)

F) Mounting hardware must not be located closer than 8" (200 mm) from the vertical centre line of the appliance

G) Edge clearance for ceiling shields to side and back walls: 3" (75 mm)

H) Shield extension beyond each side of the appliance: 18" (450 mm)

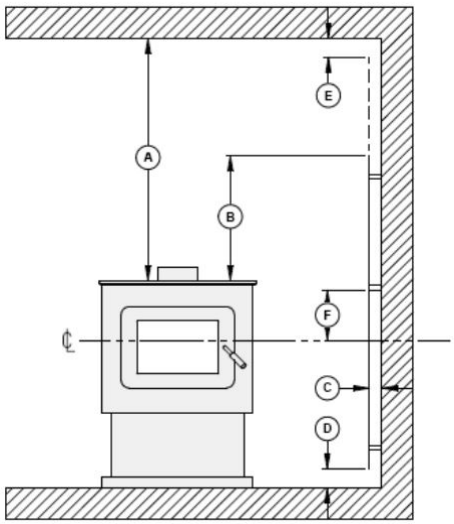

Figure 17: Heat shield clearances

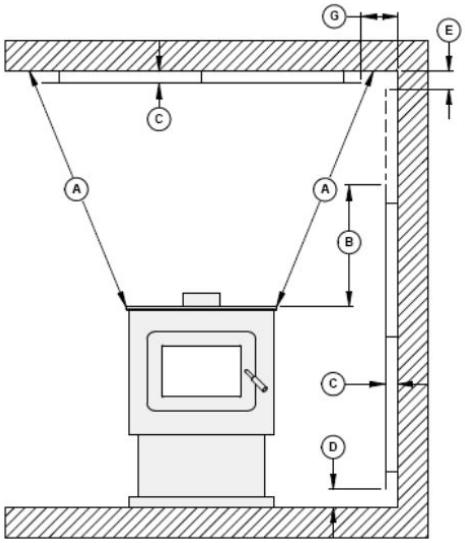

Figure 18: Heat shield clearances

ENGLISH

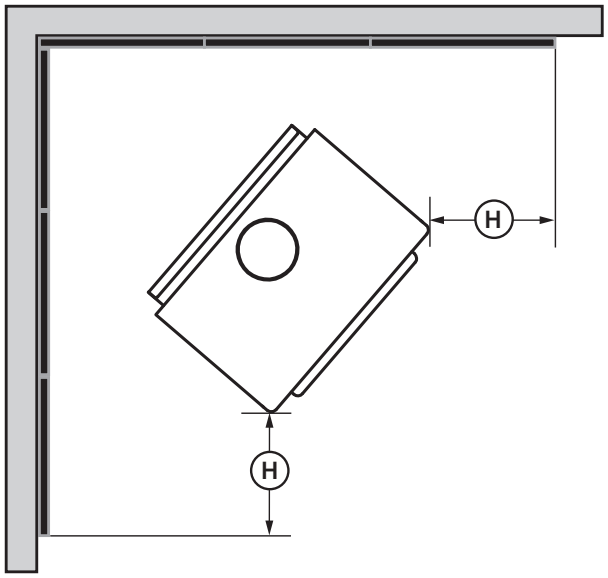

Figure 19: Heat shield clearances

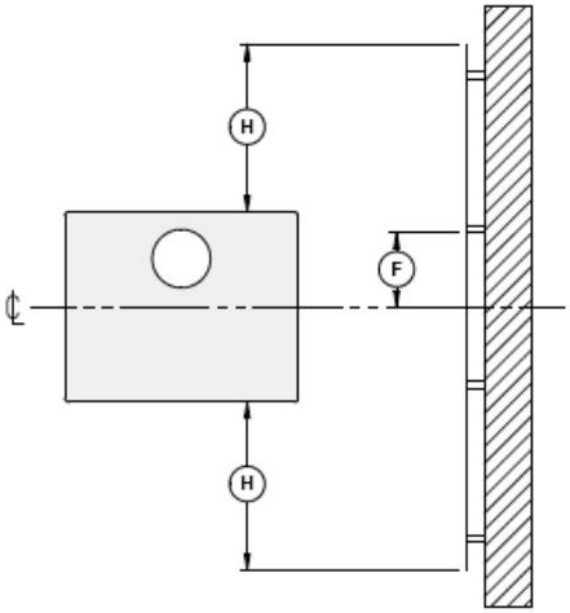

Figure 20: Heat shield clearances

ENGLISH

TYPE OF SHIELD	CLEARANCES MAY BE REDUCED BY THESE PERCENTAGES				
	SIDES AND REAR		TOP (CEILING)		
	CAN / USA (%)	USA MIN.	CAN / USA (%)	USA MIN.	
Sheet metal, a minimum of 24 gauge (0.61 mm) in thickness , spaced out at least 1" (25 mm)* by non-combustible spacers	67	12" (305 mm)	50	18" (457 mm)	
Ceramic tiles, or equivalent non-combustible material, on non-combustible board spaced out at least 1" (25 mm)* by non-combustible spacers	50	18" (457 mm)	33	24" (610 mm)	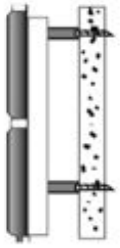
Ceramic tiles, or equivalent non-combustible material, on non-combustible board, with a minimum of 24 gauge (0.61 mm) sheet metal backing spaced out at least 1" (25 mm)* by non-combustible spacers	67	12" (305 mm)	50	24" (610 mm)	
Brick, spaced out at least 1" (25 mm)* by non-combustible spacers	50	18" (457 mm)	N/A	N/A	
Brick, with a minimum of 24 gauge (0.61 mm) sheet metal backing, spaced out at least 1" (25 mm)* by non-combustible spacers	67	12" (305 mm)	N/A	N/A	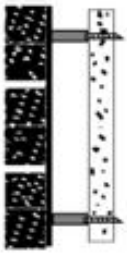

* In Canada this space can be ⅞" (21 mm)

ENGLISH

6. OPTIONS INSTALLATION ON YOUR PRODUCT

6.1 Optional Fresh Air Intake Kit Installation

THE IMAGES SHOWN ARE INDICATIVE ONLY AND MAY DIFFER OF YOUR PRODUCT, BUT THE ASSEMBLY REMAINS THE SAME.

This mobile home approved stove requires the installation of a fresh air intake kit **(A)** and an insulated fresh air intake pipe (HVAC type, must meet ULC S110 or UL 181 class 0 or class 1) **(B)**, sold separately. Refer to air intake kit installation instructions for more details.

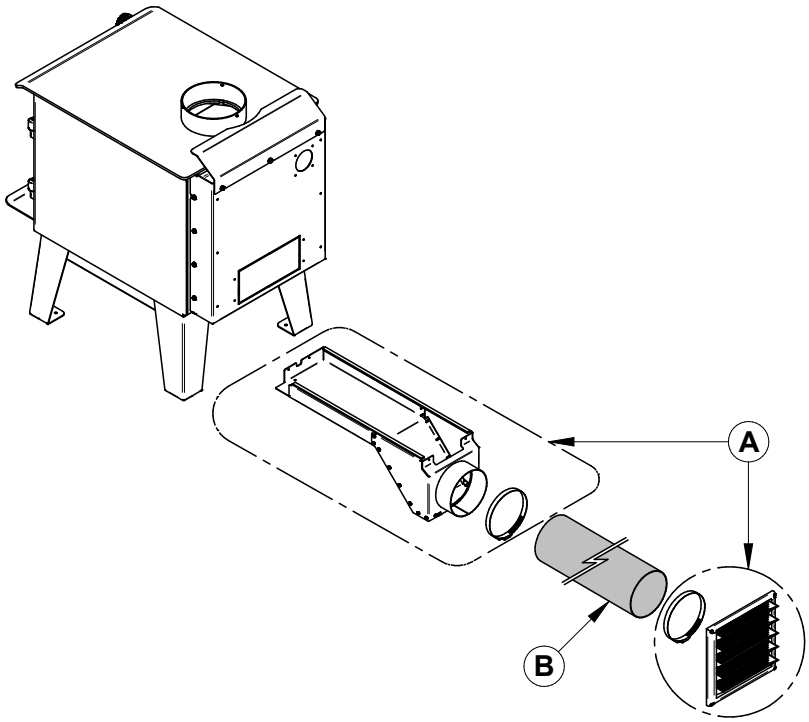

ENGLISH

6.2 Decorative Panels

THE IMAGES SHOWN ARE FOR GUIDANCE ONLY AND MAY BE DIFFERENT FROM YOUR PRODUCT, BUT THE ASSEMBLY REMAINS THE SAME.

To remove the decorative panel **(A)**, remove the screws **(B)** and push forward on the panel to unhook it from the bracket **(C).**

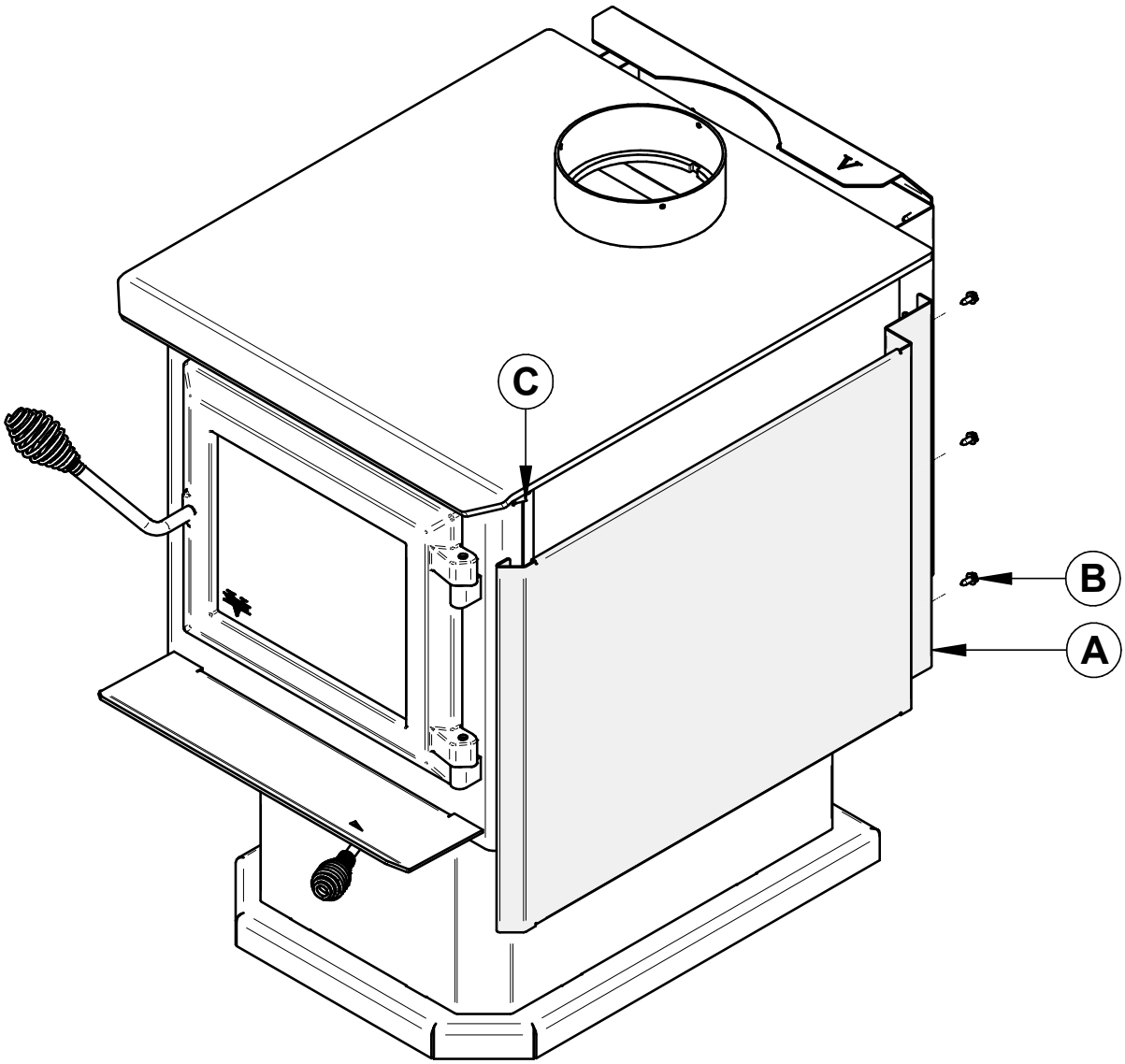

ENGLISH

6.3 Optional Fire Screen Installation

THE IMAGES SHOWN ARE INDICATIVE ONLY AND MAY DIFFER OF YOUR PRODUCT, BUT THE ASSEMBLY REMAINS THE SAME.

In the United States or in provinces with a particulate emission limit (eg US EPA), the use of wood stoves with open door with and fire screen is prohibited.

It is prohibited to use this wood stove with a fire screen in a mobile home.

1. Open the door.

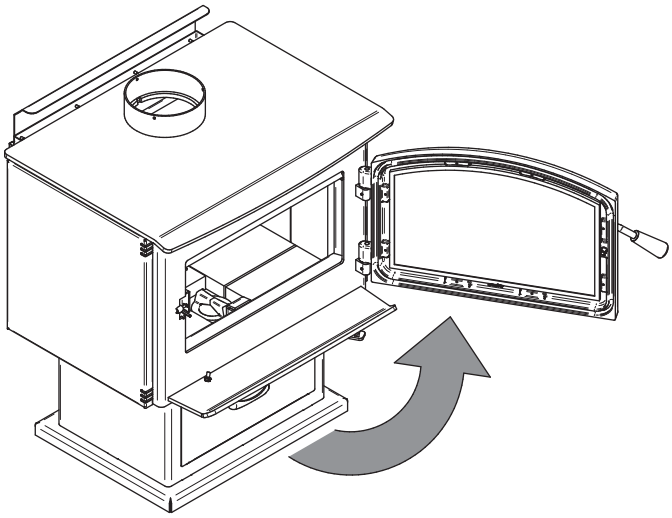

2. Hold the fire screen by the two handles and bring it close to the door opening.

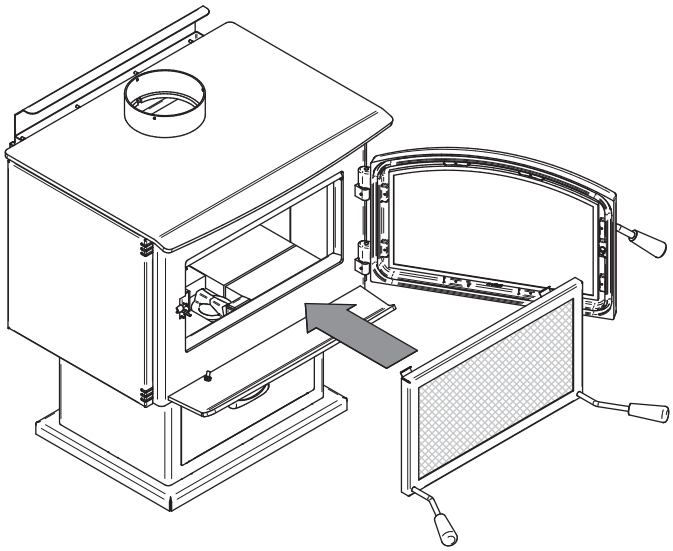

3. Lean the upper part of the fire screen against the top door opening making sure to position the top fire screen brackets behind the primary air deflector.
4. Lift the fire screen upwards and push the bottom part towards the stove then let the fire screen rest on the bottom of the door opening.

Warning: Never leave the stove unattended while in use with the fire screen.

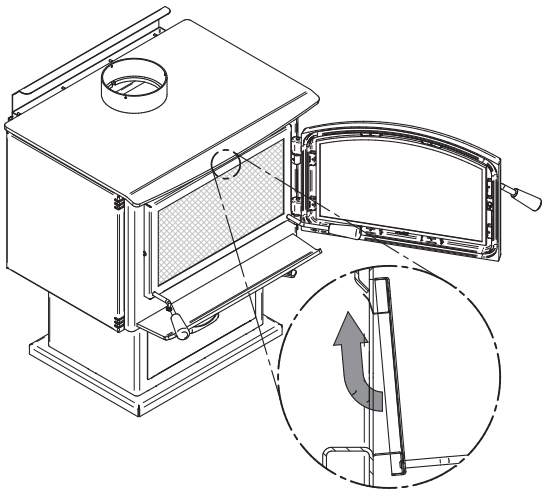

ENGLISH

6.4 Optional Blower Thermodisc Installation (AC02023)

THE IMAGES SHOWN ARE INDICATIVE ONLY AND MAY DIFFER OF YOUR PRODUCT, BUT THE ASSEMBLY REMAINS THE SAME.

A blower with a thermodisc, sold separately, can be installed on the stove. Thermodisc allows the blower to operate only when the stove is hot enough.

1. Remove the backplate by cutting the knockouts with pliers.

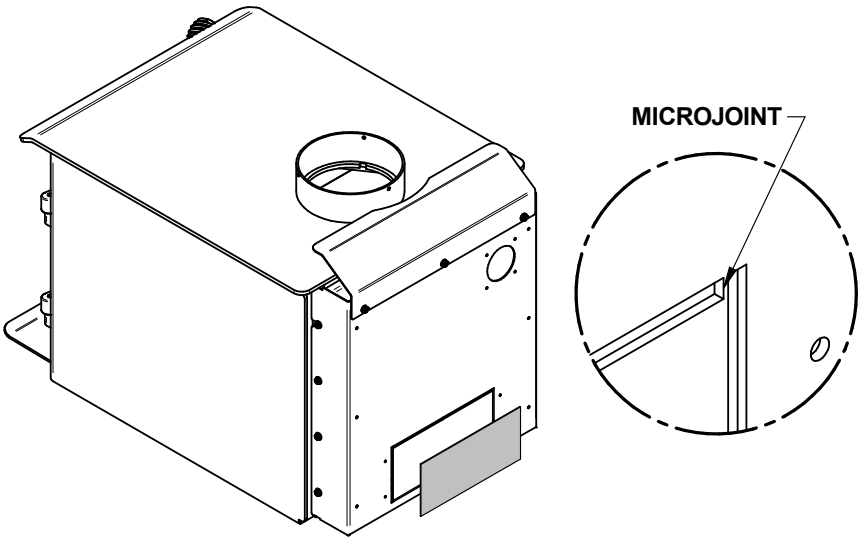

2. Screw the blower **(D)** in place using the screws **(C)** included in the installation manual. Screw the thermodisc **(A)** with the screws **(B)** supplied with the thermodisc on the back of the stove. **Ensure that the blower's power cord is not in contact with any surface of the stove to prevent electrical shock or fire damage. Do not run the power cord beneath the stove.**

WARNING - The blower assembly must be disconnected from the source of electrical supply before attempting the installation.

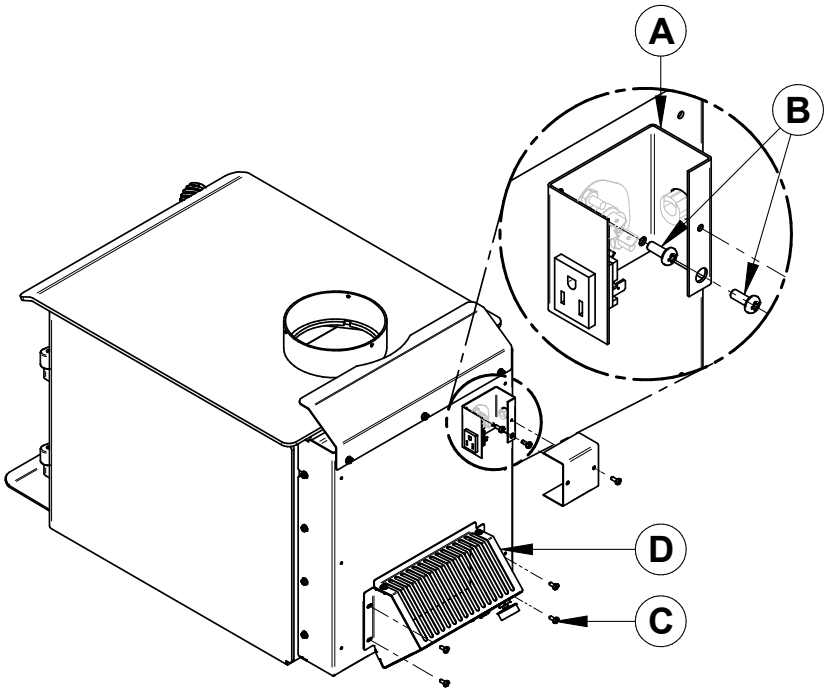

ENGLISH

6.5 Air Tubes and Baffles Installation

Note: There is foor secondary air tubes on this stove. The two rear tubes are identical, while the other two are different. Their positions are important to ensure optimal combustion. A code is engraved on each tubes to identify them. Refer to these codes for the following steps.

1. To install an air tube, lean and insert the right end of the secondary air tube into the right channel hole. Then lift and insert the left end of the tube into the left channel.

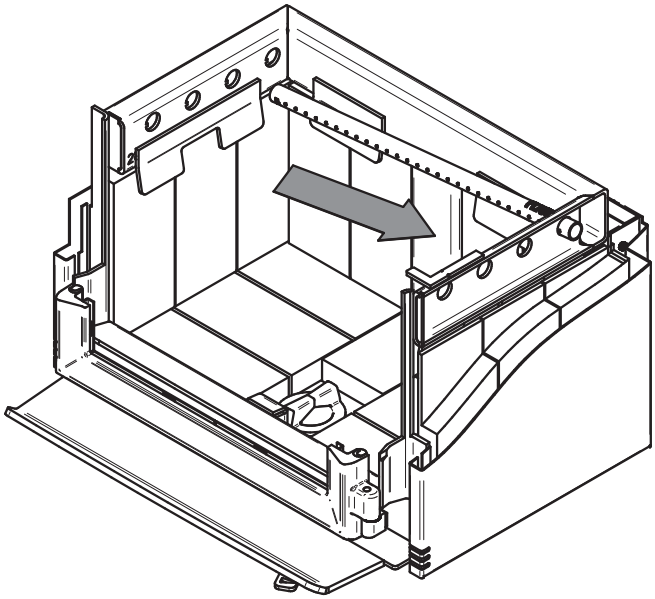

2. Align the notch in the left end of the tube with the key of the left air channel hole. Using a Vise grip hold the tube and lock it in place by turning the tube as shown. Make sure the notch reaches the end of the key way.

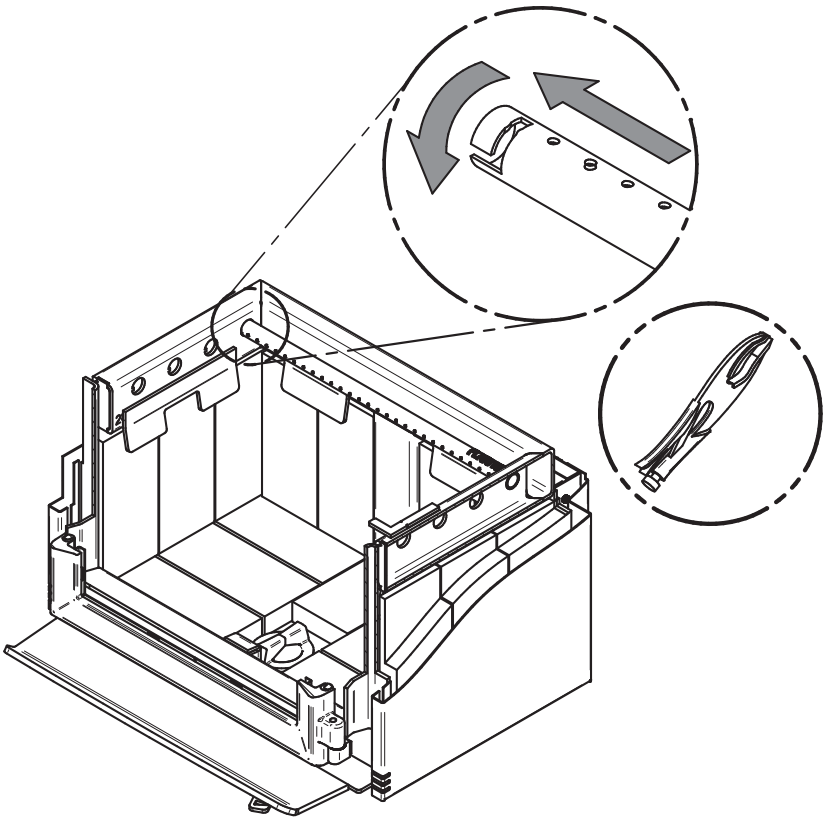

ENGLISH

3. Install the rear baffle first and place it on top of the baffle support in the back of the product. Proceed with the installation of the first rear tube.

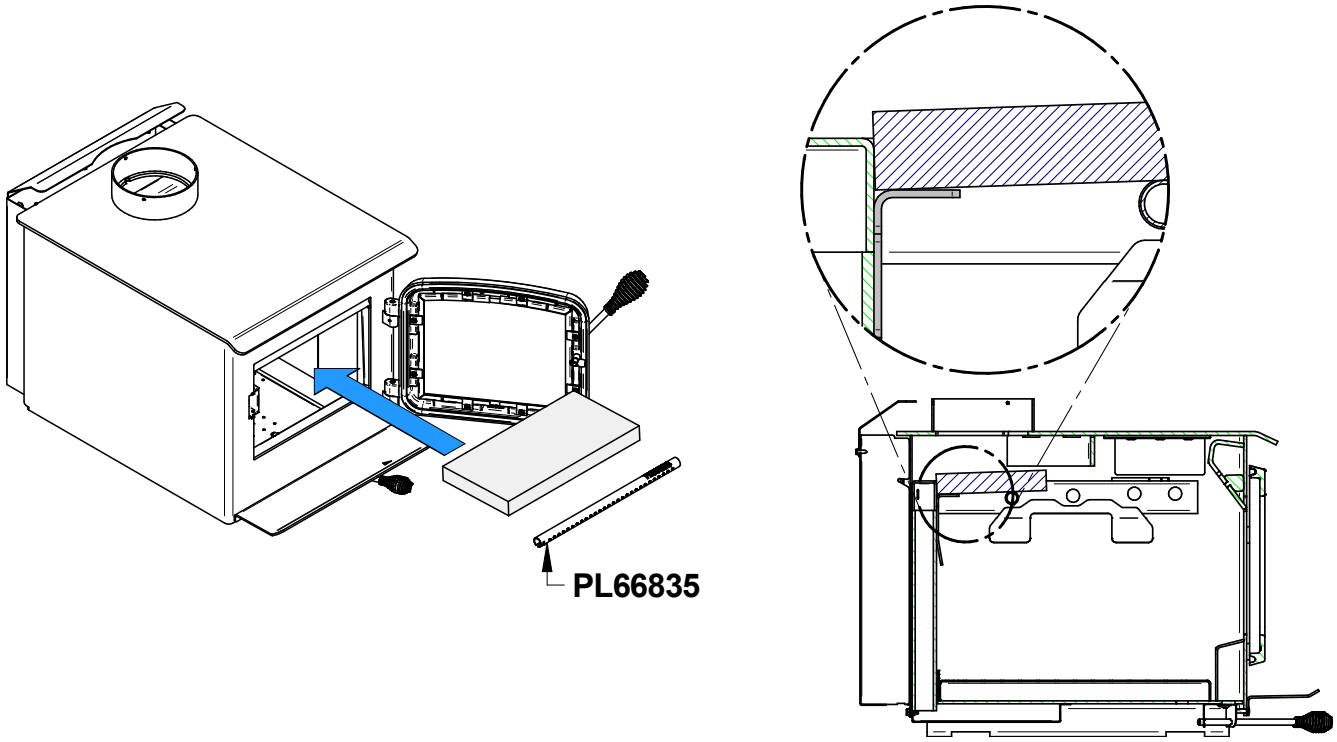

4. Install the next tube in the rear, install the second baffle and continue with the installation of the third and fourth tube.

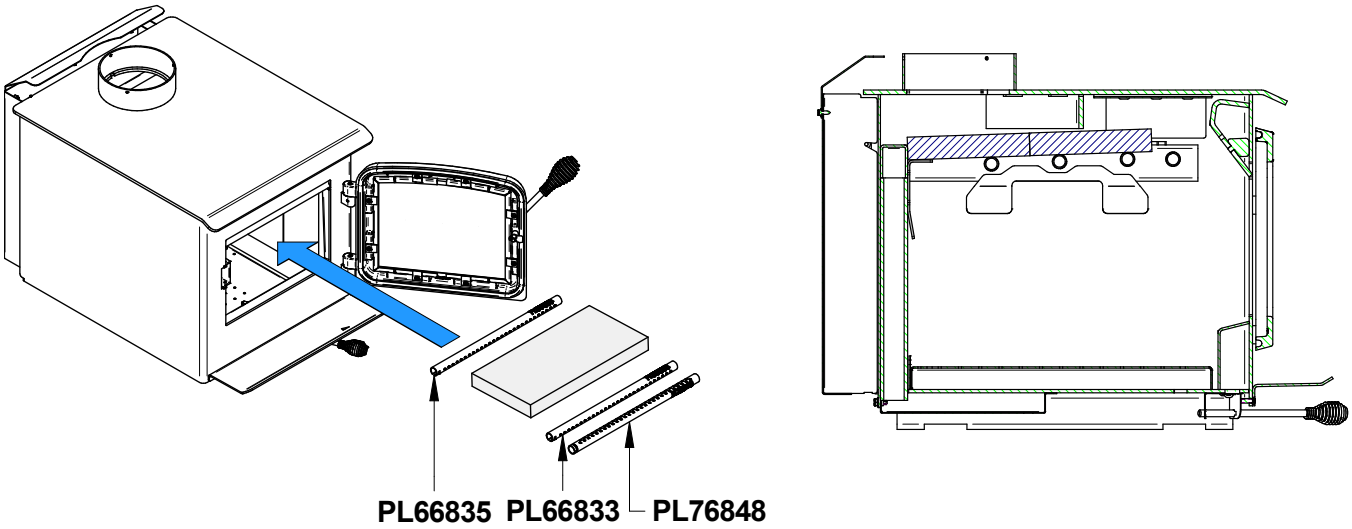

To replace the tubes and baffles, follow the steps above in reverse order.

ENGLISH

6.6 Mobile Home Installation

THE IMAGES SHOWN ARE INDICATIVE ONLY AND MAY DIFFER OF YOUR PRODUCT, BUT THE ASSEMBLY REMAINS THE SAME.

Screw the legs in place with the proper hardware.

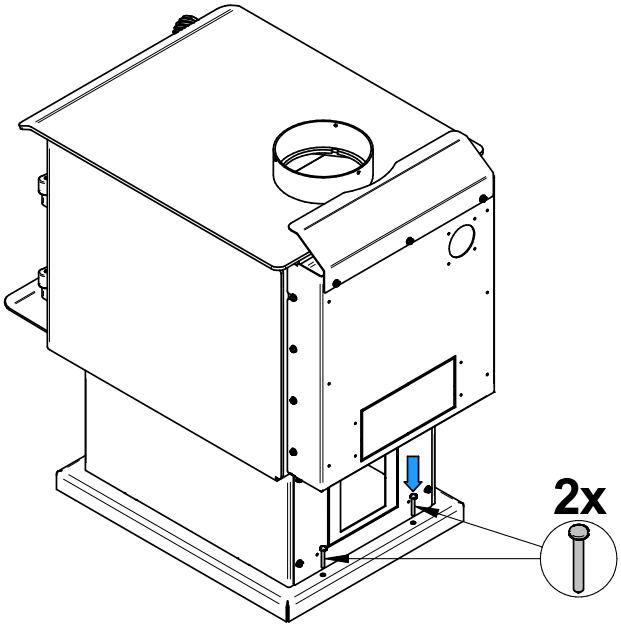

ENGLISH

7. Maintenance/Parts Replacement

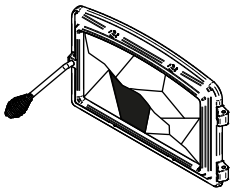

Do not clean the glass when the stove is hot.

Do not abuse the glass door by striking or slamming shut.

Do not use the stove if the glass is broken.

7.1 Replacement

The glass used is a ceramic glass, 5/32" (4 mm) thick, tested to reach temperatures up to 1400° F. The dimensions of the glass are 10 1/8" W X 8 1/4" H. If the glass breaks, it must be replaced by a ceramic glass from SCHOTT with the same specification. Contact your dealer to obtain a genuine replacement part.

WARNING : DO NOT USE SUBSTITUTE MATERIALS WHEN REPLACING THE GLASS.

To remove or replace the glass (D):

THE IMAGES SHOWN ARE INDICATIVE ONLY AND MAY DIFFER OF YOUR PRODUCT, BUT THE ASSEMBLY REMAINS THE SAME.

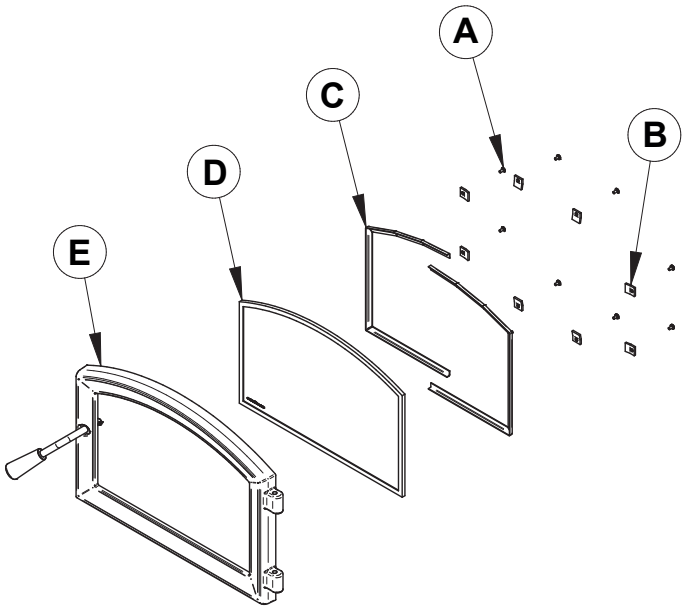

1. Remove the door **(E)** from its hinges and lay it on a soft, flat surface.
2. Remove the eight screws **(A)**, the eight glass retainers **(B)**, and the metal frames **(C)**.
3. Remove the glass **(D)**. If it is damaged install a new one in place. The replacement glass must have a gasket all around (see procedure below).
4. Reinstall the glass, being careful to centre the glass in the door and not to over-tightening the retaining screw.

The two main causes of broken door glass are uneven placement in the door and over-tightening the retaining screws.

ENGLISH

7.2 Gasket

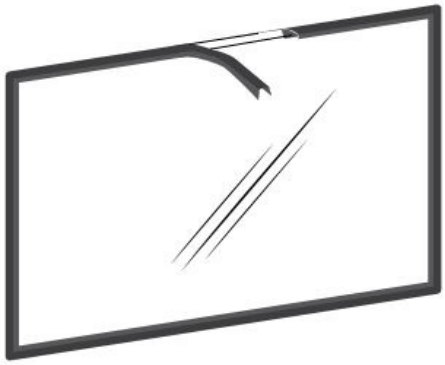

The glass gasket is flat, adhesive-backed, woven fibreglass. The gasket must be centred on the edge of the glass.

1. Follow the steps of the previous section to remove the glass.
2. Remove the old gasket and clean the glass thoroughly.
3. Peel back a section of the paper covering the adhesive and place the gasket on a table with the adhesive side up.
4. Stick the end of the gasket to the middle of one edge, then press the edge of the glass down onto the gasket, taking care that it is perfectly centred on the gasket.
5. Peel off more of the backing and rotate the glass. The gasket must not be stretched during installation.
6. Cut the gasket to the required length.
7. Pinch the gasket onto the glass in a U shape, all around the glass.

By following these instructions, the edge clearances are maintain.

7.3 Door

In order for the stove to burn at its best efficiency, the door must provide a perfect seal with the firebox. The tightness of the door seal can be verified by closing and latching the door on a strip of paper. The test must be performed all around the door. If the paper slips out easily anywhere, either adjust the door or replace the gasket.

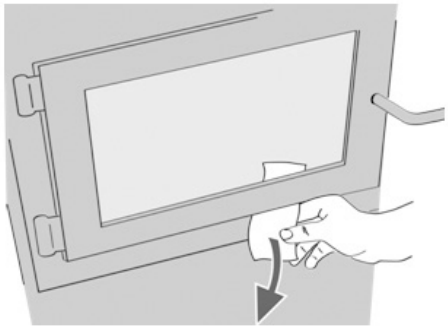

ENGLISH

7.3.1 Door Alignment

To align, open the door and loosen the pressures screws located on the lower and upper hinges of the door using a 3/32" Allen key to free the adjustable hinge rods.

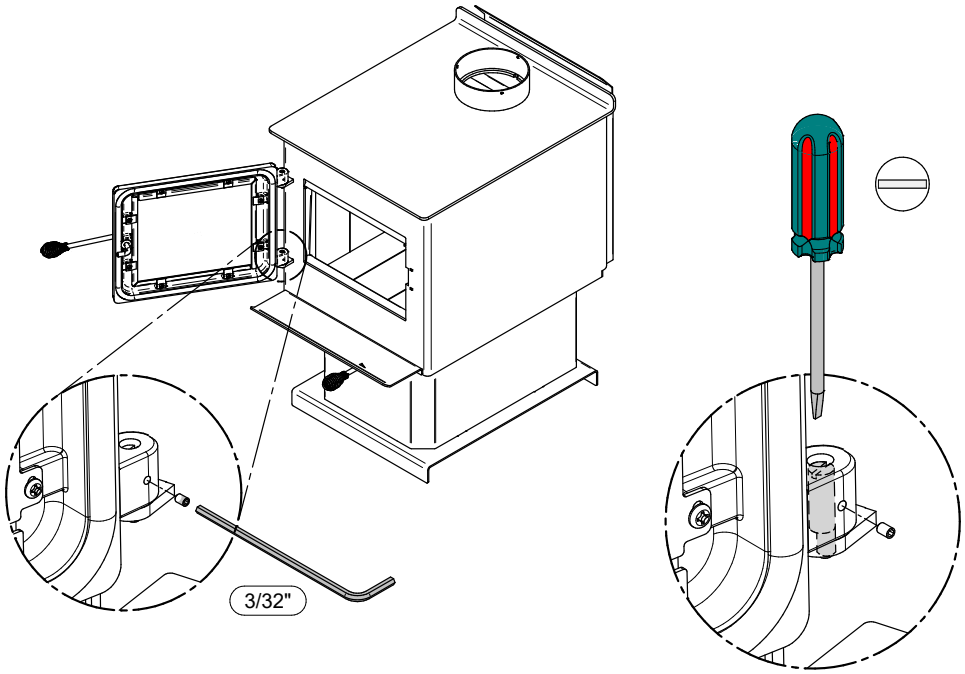

Using a flat screwdriver, turn the adjustable hinge rods in the direction shown to adjust the doors. Tighten all door hinge pressure screws when they are at the desired positions. Configurations 1-2-3-4-5-6, show in which direction these act on the adjustment of the door.

①		②		③		④	
	A		A		A		A
	B		B		B		B

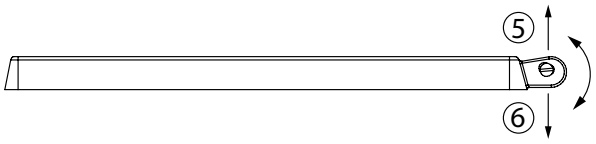

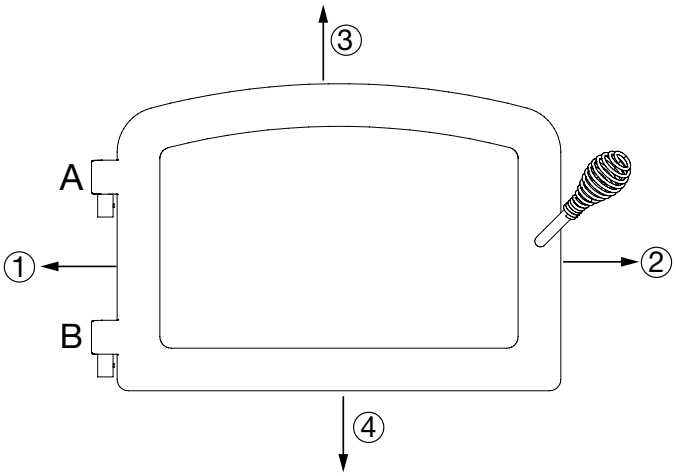

ENGLISH

7.3.2 Gasket

It is important to replace the gasket with another having the same diameter and density to maintain a good seal.

1. Remove the door and place it face-down on something soft like a cushion of rags or a piece of carpet.
2. Remove the old gasket from the door. Use a screwdriver to scrape the old gasket adhesive from the door gasket groove.
3. Apply a bead of approximately 3/16" (5 mm) of high temperature silicone in the door gasket groove. Starting from the middle, hinges side, press the gasket into the groove. The gasket must not be stretched during installation.
4. Leave about ½" long of the gasket when cutting and press the end into the groove. Tuck any loose fibers under the gasket and into the silicone.
5. Close the door. Do not use the stove for 24 hours.

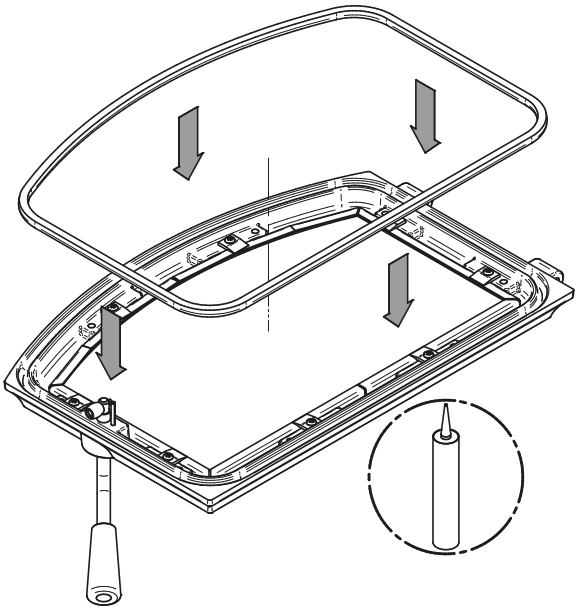

ENGLISH

7.4 Replacing the log retainers

To replace the log retainers, remove the 6 bricks **(A)** from the front, allowing the retainers **(B)** to be exchanged.

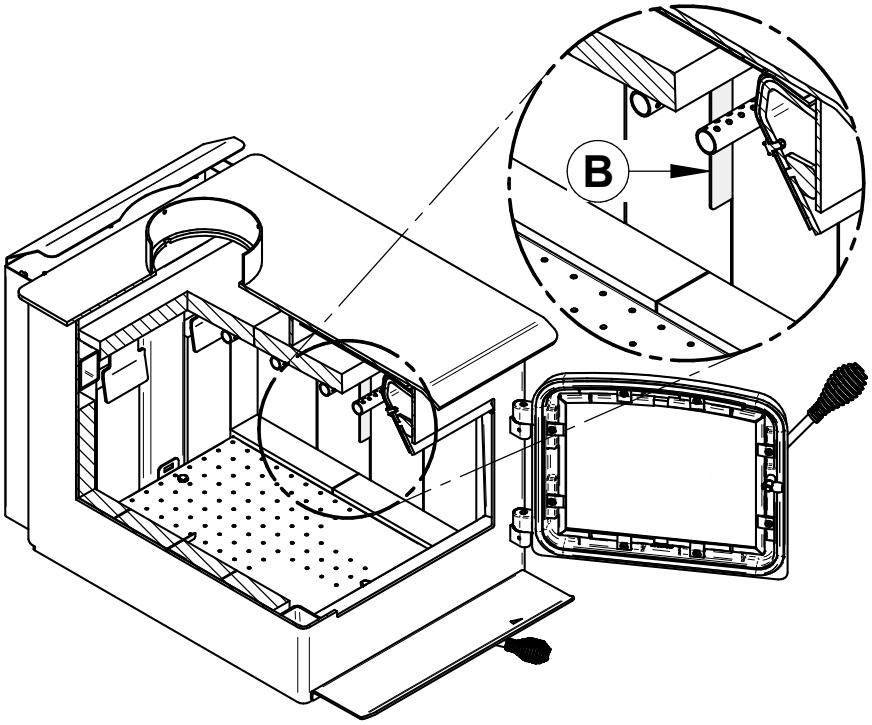

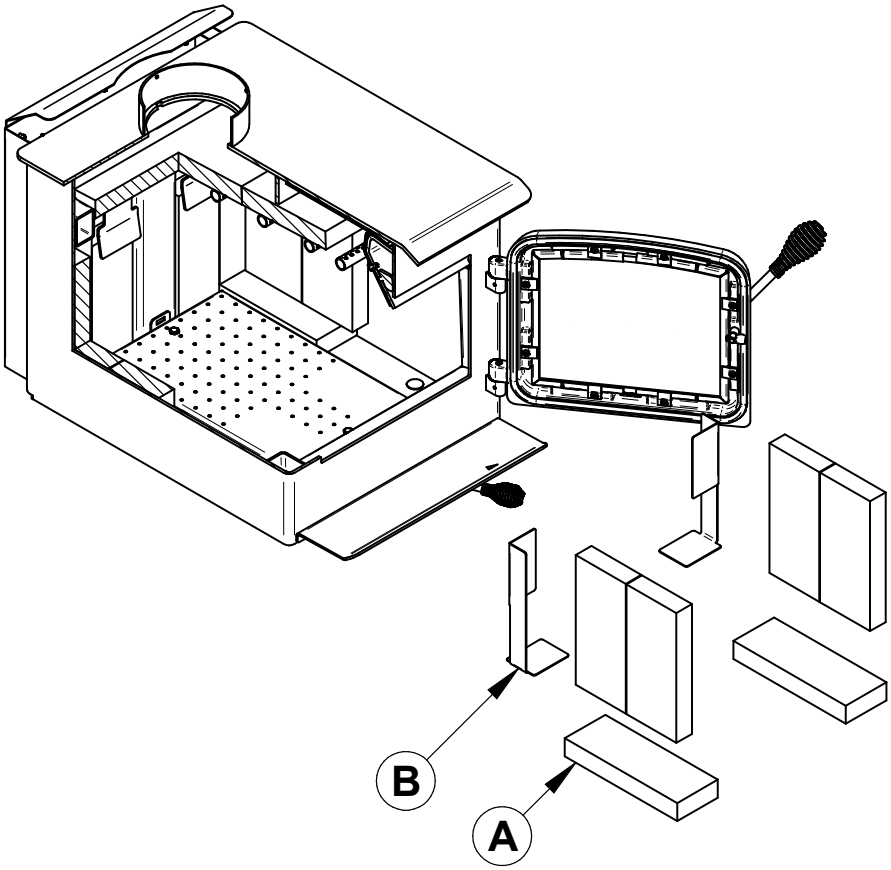

ENGLISH

7.5 Combustion grate maintenance

The combustion grate needs to be removed once or twice a year to remove ashes from beneath the grate. Refer to the procedure below.

1. Remove both screws **(A)**.

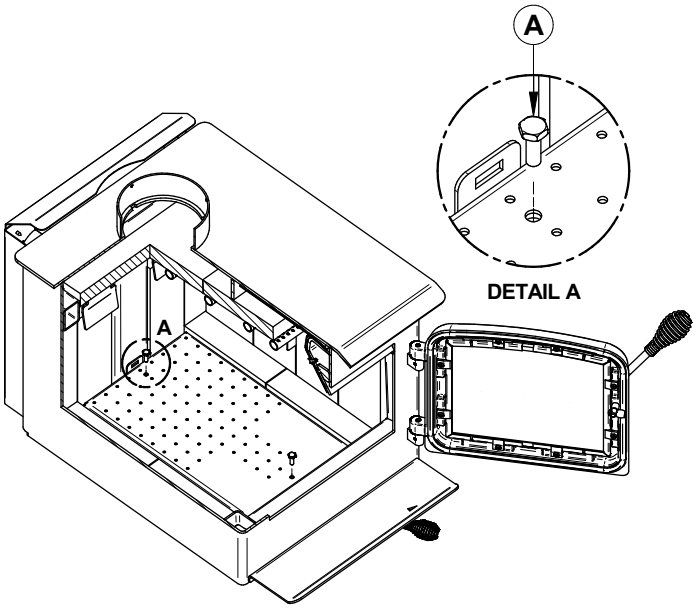

2. Use a flathead screwdriver as a lever to lift the combustion grate **(B)**.

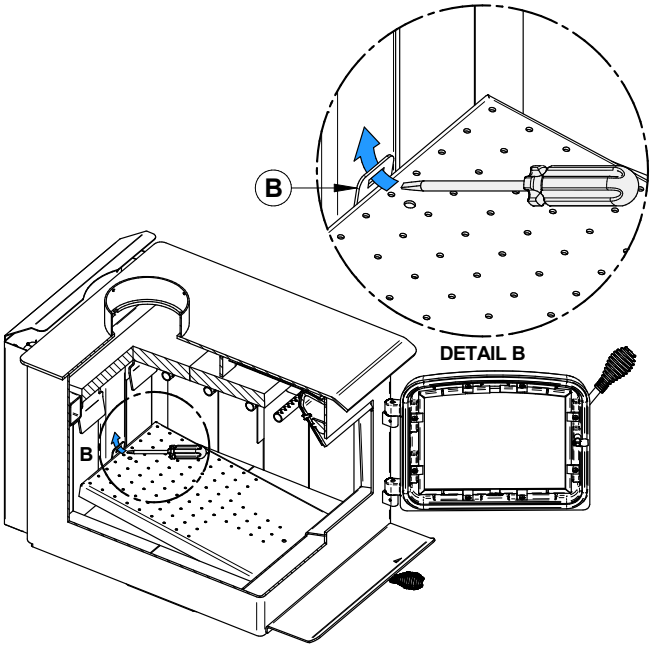

3. Remove the combustion grate **(B)**.

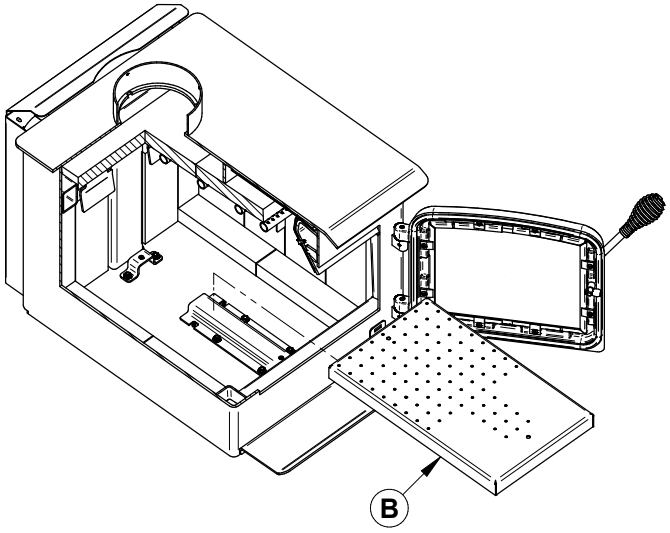

4. Clean the bottom with a vacuum intended for that purpose. Make sure to properly vaccum near the combustion air outlet.

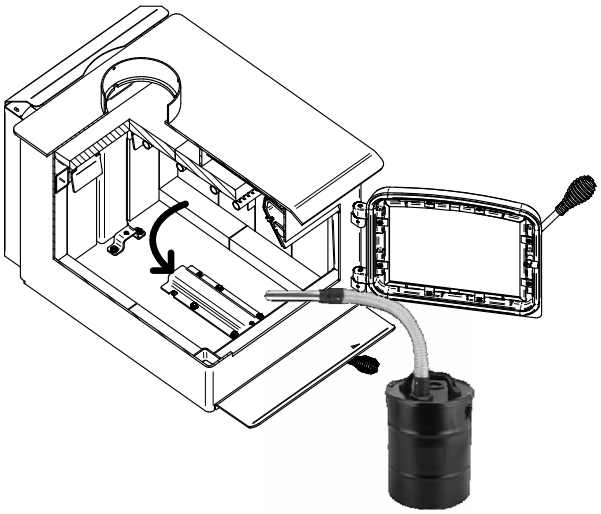

To replace the combustion grate, follow the same steps mentioned above.

ENGLISH

8. Exploded Diagram and Parts List

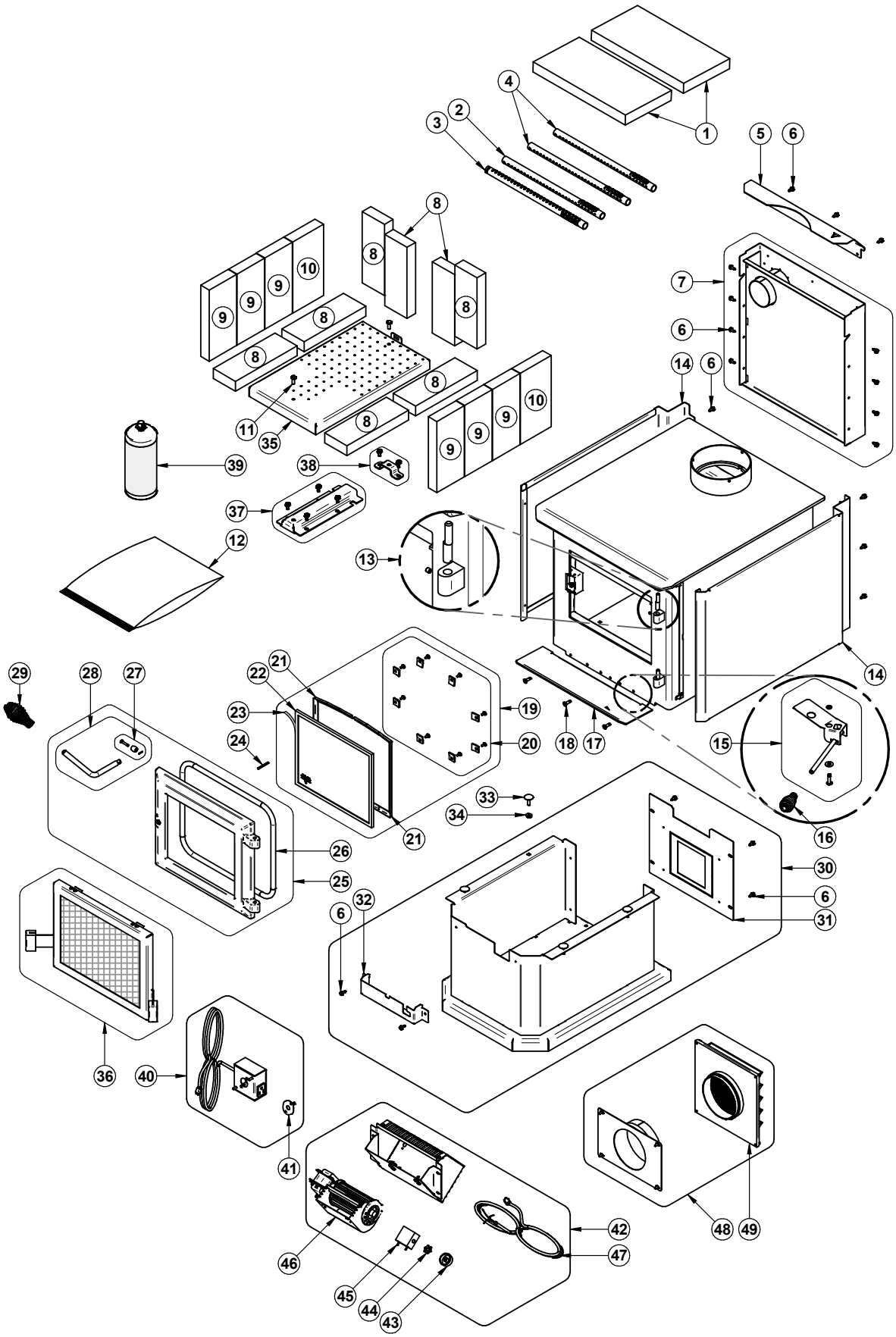

ENGLISH

IMPORTANT: THIS IS DATED INFORMATION. When requesting service or replacement parts for your stove, please provide the model number and serial number. We reserve the right to change parts due to technology upgrade or availability. Contact an authorized dealer to obtain one of these parts. Never use substitute materials. The use of unapproved parts can cause poor performance and risk to your safety.

#	Item	Description	Qty
1	21708	VERMICULITE PANEL	2
2	PL66833	REAR SECONDARY AIR TUBE	1
3	PL76848	SECONDARY FRONT AIR TUBE	1
4	PL66835	FRONT AND CENTER SECONDARY AIR TUBE	2
5	PL76886	BACK AIR DEFLECTOR	1
6	31048	SCREW #10 X 1/2 HWH PH TYPE AB BLACK	23
7	SE76861-07	REAR HEAT SHIELD ASSEMBLY (SERIAL NO. REQUIRED)	1
8	29007	3 1/4" X 9" X 1 1/4" REFRACTORY BRICK	8
9	29015	4" X 9" X 1 1/4" REFRACTORY BRICK	6
10	29010	4 1/2" X 9" X 1 1/4" REFRACTORY BRICK	2
11	30785	MECHANICAL SCREW 1/4-20 X 3/4" STAINLESS HEX	2
12	SE46437	HES140 N INSTRUCTION MANUAL KIT	1
13	SE74167	DOOR HINGE REPLACEMENT KIT	1
14	PL76887	DECORATIVE PANEL	2
15	SE76854	AIR CONTROL DAMPER ASSEMBLY	1
16	AC07869	3/8" BLACK COIL HANDLE	1
17	PL74289	ASH TRAY	1
18	30507	BLACK TORX SCREW WITH FLAT HEAD TYPE F 1/4-20 X 3/4"	3
19	SE76865	GLASS WITH GASKET, FRAMES AND RETAINERS	1
20	SE53585	GLASS RETAINERS WITH SCREWS	1
21	PL76880	GLASS FRAME MOULDING	2
22	SE74254	11 1/4" x 9 5/8" GLASS WITH GASKET	1
23	AC06400	3/4" x 6' FLAT BLACK SELF-ADHESIVE GLASS GASKET (AC-GGK)	1
24	30101	SPRING TENSION PIN 5/32" Ø X 1 1/2" L	1
25	SE24352	VENTIS 1.4 DOOR WITH HANDLE AND GASKET	1
26	AC06500	SILICONE AND 5/8" X 8' BLACK DOOR GASKET KIT (AC-DGKNC)	1
27	AC09185	DOOR LATCH KIT	1
28	SE70697	REPLACEMENT HANDLE WITH LATCH KIT	1
29	AC07868	1/2" BLACK COIL HANDLE	1
30	SE76866	HES140 N PEDESTAL ASSEMBLY	1
31	PL76869	BACK OF THE BASE	1
32	PL76905	DASH BASE	1
33	30536	LEVELING BOLT 1/4 - 20 X 1"	4

#	Item	Description	Qty
34	30782	HEX FLANGE NUT SERRATED 1/4-20 STAINLESS 18-8	4
35	PL76865	COMBUSTION GRATE	1
36	AC01420	RIGID FIRESCREEN	1
37	SE76850	GRID CHANNELING	1
38	SE76851	GRID FIXATION	1
39	AC05959	METALLIC BLACK STOVE PAINT - 342 g (12oz) AEROSOL	1
40	AC02023	BLOWER ASSEMBLY WITH VARIABLE SPEED CONTROL AND THERMODISC (UP TO 100 CFM)	1
41	44028	CERAMIC THERMODISC F110-20F	1
42	AC02023	BLOWER ASSEMBLY WITH VARIABLE SPEED CONTROL AND THERMODISC (UP TO 100 CFM)	1
43	44085	RHEOSTAT KNOB	1
44	44087	RHEOSTAT NUT	1
45	44080	RHEOSTAT WITHOUT NUT (MODEL KBMS-13BV)	1
46	44073	CROSSFLOW BLOWER 115V-60Hz-39W 100 CFM	1
47	60013	POWER CORD 96" X 18-3 type SJT (50 pcs per carton)	1
48	AC01336	5"Ø FRESH AIR INTAKE KIT FOR WOOD STOVE ON PEDESTAL	1
49	49028	5" WHITE AIR INTAKE TERMINATION	1

VENTIS LIMITED LIFETIME WARRANTY

The warranty of the manufacturer extends only to the original retail purchaser and is not transferable. This warranty covers brand new products only, which have not been altered, modified nor repaired since shipment from factory. Proof of purchase (dated bill of sale), model name and serial number must be supplied when making any warranty claim to your VENTIS dealer.

This warranty applies to normal residential use only. This warranty applies to normal residential use only. This warranty is void if the unit is used to burn material other than cordwood (for which the unit is not certified by EPA) and void if not operated according to the owner's manual. Damages caused by misuse, abuse, improper installation, lack of maintenance, over firing, negligence or accident during transportation, power failures, downdrafts, venting problems or under-estimated heating area are not covered by this warranty. The recommended heated area for a given appliance is defined by the manufacturer as its capacity to maintain a minimum acceptable temperature in the designated area in case of a power failure.

This warranty does not cover any scratch, corrosion, distortion, or discoloration. Any defect or damage caused by the use of unauthorized or other than original parts voids this warranty. An authorized qualified technician must perform the installation in accordance with the instructions supplied with this product and all local and national building codes. Any service call related to an improper installation is not covered by this warranty.

The manufacturer may require that defective products be returned or that digital pictures be provided to support the claim. Returned products are to be shipped prepaid to the manufacturer for investigation. Transportation fees to ship the product back to the purchaser will be paid by the manufacturer. Repair work covered by the warranty, executed at the purchaser's domicile by an authorized qualified technician requires the prior approval of the manufacturer. All parts and labour costs covered by this warranty are limited according to the table below.

The manufacturer, at its discretion, may decide to repair or replace any part or unit after inspection and investigation of the defect. The manufacturer may, at its discretion, fully discharge all obligations with respect to this warranty by refunding the wholesale price of any warranted but defective parts. The manufacturer shall, in no event, be responsible for any uncommon, indirect, consequential damages of any nature, which are in excess of the original purchase price of the product. **A one-time replacement limit applies to all parts benefiting from lifetime coverage.** This warranty applies to products purchased after March 1st, 2015.

DESCRIPTION	WARRANTY APPLICATION	
	PARTS	LABOUR
Combustion chamber (welds only), castings and convector air-mate	Lifetime**	4 years
Plating* (defective manufacture) - subject to limitations above Ceramic glass (thermal breakage only*)	Lifetime**	N/A
Stainless steel firebox components, vermiculite, C-Cast or equivalent baffle* and secondary air tubes*, glass retainers and handle assembly	5 years**	3 years
Surrounds and heat shields, ash drawer, steel legs, pedestal and trim (aluminum extrusions)	5 years	N/A
Carbon steel firebox components	3 years	2 years
Blowers, heat sensors, switches, rheostat, wiring and electronics	2 years	1 year
Paint (peeling*), gaskets, insulations, refractory bricks (fireplace only**) and ceramic fibre blankets	1 year	N/A
All parts replaced under the warranty	90 days	N/A

***Pictures required** ***Limited to one replacement**

Labour cost and repair work to the account of the manufacturer are based on a predetermined rate schedule and must not exceed the wholesale price of the replacement part.

Shall your unit or a components be defective, contact immediately your **VENTIS** dealer. To accelerate processing of your warranty claim, make sure to have on hand the following information when calling:

- Your name, address and telephone number
- Bill of sale and dealer's name
- Installation configuration
- Serial number and model name as indicated on the nameplate fixed to the back of your unit
- Nature of the defect and any relevant information

Before shipping your unit or defective component to our plant, you must obtain an Authorization Number from your VENTIS dealer. Any merchandise shipped to our plant without authorization will be refused automatically and returned to sender.

Wood_Revision : May 2021

ENGLISH

This document is available for free download on the manufacturer's website. It is a copyrighted document. Resale is strictly prohibited. The manufacturer may update this document from time to time and cannot be responsible for problems, injuries, or damages arising out of the use of information contained in any document obtained from unauthorized sources.

Stove Builder International inc.
250, rue de Copenhague,
St-Augustin-de-Desmaures (Québec) Canada
G3A 2H3
1-877-356-6663
https://www.occanada.com/en/
tech@sbi-international.com