DISTRIBUTED BY:

SBI

VENTING DIVISION

2100 insulated chimney

All-Fuel Chimney System

INSTALLATION INSTRUCTIONS

DANGER	
	A MAJOR CAUSE OF CHIMNEY-RELATED FIRES IS FAILURE TO MAINTAIN REQUIRED CLEARANCES (AIRSPACES) TO COMBUSTIBLE MATERIALS. IT IS OF THE UTMOST IMPORTANCE THAT THIS 2100 INSULATED CHIMNEY IS INSTALLED ONLY IN ACCORDANCE WITH THESE INSTRUCTIONS.

This 2100 insulated chimney, type HT, meets the requirements of the UL 103 and CAN/ULC S629 Standards.

Read through these instructions before beginning your installation. Failure to install according to these instructions will void the manufacturer's warranty and may have an effect on your homeowner's insurance and UL and ULC Listing status.

250 De Copenhague Street
Saint-Augustin-de-Desmaures,
(Québec), Canada, G3A 2H3
418-870-1305

READ AND KEEP THIS MANUAL FOR REFERENCE

45655A
Printed in Canada
2026-07-06

TABLE OF CONTENTS

Certification Plate **3**

General Information **4**
Codes & Permits 4
Product Applications 4

General Specifications **5**
Clearances 5
Sizing the Chimney System 5
Additional Considerations 6

Installation Preparation **7**
Equipments, Tools and Hardware 7
Approved Installations 8
Safety Considerations 8
Installation Examples 8

Ceiling Supported Installation **10**

Extended Roof Brace Installation **17**

Offset or Elbow Installation **18**

Roof Supported Installation **20**
Scenario #1 - Cathedral Ceiling Support (Square or Round) 20
Scenario #2 - Roof Support Bracket 21

Exterior Supported Installation **22**

Masonry Fireplace Installation **25**

Factory Built Zero Clearance Fireplace Installation **26**

Transition Plate for Chimney Restoration **30**

Maintenance Instructions **31**
Warning for Solid Fuel Applications 31
Maintenance Procedures 32
Additional Information 32

Parts list **34**

LIMITED LIFETIME WARRANTY **38**

CERTIFICATION PLATE

- Minimum clearance: 2" to combustible materials and building insulation, or as established by factory built supports and firestops.
- Dégagement minimal : 2" des matériaux combustibles et à l'isolation de la bâtisse ou tel qu'établi pour les supports et coupe-feux.
- Class A chimney is designed for connection to solid, liquid or gas fired appliances producing flue gases of 650 °C or less.
- La cheminée Class A est conçue pour raccorder les appareils de combustion au bois, liquide ou gazeux produisant des gaz d'échappement de 650 °C ou moins.
- **Install and use only in accordance with SBI installation and maintenance instructions packaged with support assembly.**
- **Installer et utiliser uniquement conformément aux instructions d'installation et d'entretien de SBI fournies avec l'ensemble de support.**
- Suitable for interior or exterior installation.
- **Convient à une installation intérieure ou extérieure.**

Intertek

CERTIFIED TO / CERTIFIÉ SELON
UL 103
CAN/ULC S629
CONTROL #: 4002461
TYPE HT 2100F

UP / HAUT

MODEL/MODÈLE
CVA304-0636
NA-0636

SBI VENTING DIVISION
250 , rue de Copenhague
St-Augustin-de-Desmaures
(Quebec) Canada G3A 2H3

27466 *Révision A*

REFER TO INTERTEK'S DIRECTORY OF BUILDING PRODUCTS FOR DETAILED INFORMATION
SE RÉFÉRER AU RÉPERTOIRE DES PRODUITS HOMOLOGUÉS D'INTERTEK POUR PLUS D'INFORMATION

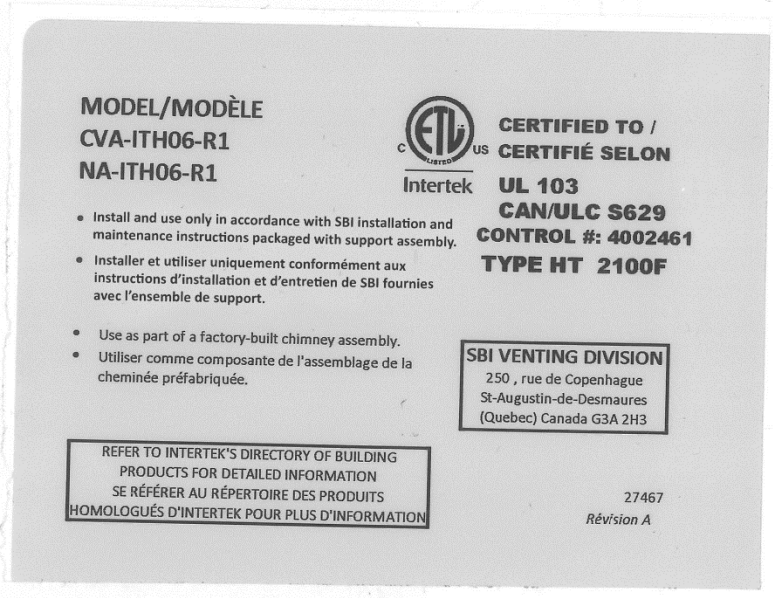

MODEL/MODÈLE
CVA-ITH06-R1
NA-ITH06-R1

- **Install and use only in accordance with SBI installation and maintenance instructions packaged with support assembly.**
- **Installer et utiliser uniquement conformément aux instructions d'installation et d'entretien de SBI fournies avec l'ensemble de support.**
- Use as part of a factory-built chimney assembly.
- Utiliser comme composante de l'assemblage de la cheminée préfabriquée.

Intertek

CERTIFIED TO / CERTIFIÉ SELON
UL 103
CAN/ULC S629
CONTROL #: 4002461
TYPE HT 2100F

SBI VENTING DIVISION
250 , rue de Copenhague
St-Augustin-de-Desmaures
(Quebec) Canada G3A 2H3

REFER TO INTERTEK'S DIRECTORY OF BUILDING PRODUCTS FOR DETAILED INFORMATION
SE RÉFÉRER AU RÉPERTOIRE DES PRODUITS HOMOLOGUÉS D'INTERTEK POUR PLUS D'INFORMATION

27467
Révision A

GENERAL INFORMATION

The quality and workmanship of this SBI Venting division 2100 insulated chimney is reflected in the recognition an accredited laboratory has given these products. The rigorous UL and ULC testing requirements are your assurance of consistent quality in materials and manufacturing standards used for this chimney system.

In addition, the industry-leading warranty on the 2100 insulated chimney is a further indication of our confidence in the quality of these products.

This chimney system must be installed, by a qualified chimney or venting professional, according to these installation and maintenance instructions. Read through and become familiar with these installation instructions before installing this product. Failure to follow these instructions may void the manufacturer's warranty and the UL and ULC listing status of this product.

CODES & PERMITS

The criteria for installation must be in conformance with the specifications contained in the latest version of the NFPA 211 (Standard for Chimneys, Fireplaces, Vents and Solid Fuel Burning Appliances) and CSA B365 (Installation code for solid-fuel-burning appliances and equipment) and local or state building codes, whichever has jurisdiction. Contact local building or fire officials about restrictions and installation inspection in your area. It may be necessary to obtain permits before installing the chimney system.

ALWAYS CONTACT YOUR LOCAL BUILDING OFFICIAL OR FIRE OFFICIAL REGARDING PERMITS, RESTRICTIONS AND INSTALLATION INSPECTIONS IN YOUR AREA.

PRODUCT APPLICATIONS

This 2100 insulated chimney system is intended for use with heating appliances using solid fuels, oil, gas (natural or propane) and coal. This includes, but is not limited to, the following appliance types: free-standing wood stoves, wood stove inserts, fireboxes, fireplaces, furnaces, boilers, stoves, ranges or water heaters that require a UL 103 or CAN/ULC S629 chimney system. *This* 2100 insulated chimney is not listed, nor intended, to be installed with forced draft or positive pressure heating appliances.

GENERAL SPECIFICATIONS

CLEARANCES

A minimum 2-inch (51 mm) airspace must be maintained between the exterior of this 2100 insulated chimney system and combustible materials or as established by factory built supports and firestops. Ensure that building insulation, electrical wiring and/or any other combustible materials do not violate the required 2-inch (51 mm) airspace clearance.

The clearance between single wall pipe and unprotected combustible material must not be less than 18 inches (45,7 cm) in conformance with the latest version of NFPA 211 or CSA B365. The distance between the vertical single wall stove pipe and the ceiling may be less than 18-inches (45,7 cm) depending on the specifications of the finishing support.

Note: Except for the installation in one and two-family dwellings, a factory-built chimney that extends through any zone above that on which the connected appliance is located is to be provided with an enclosure having a fire resistance rating equal to or greater than that of the floor or roof assemblies through which it passes.

Termination Above the Roof

The termination of this 2100 insulated chimney system must be in accord with the NFPA 211 codes and CSA B365. This code requires that a chimney terminate at least 3 feet (0,9 m) above the highest point of contact with the roof and 2 feet (0,6 m) higher than any structure within a 10-foot (3m) radius. The maximum height of an unsupported chimney above the roof line is 5 feet (1,5 m). Chimney heights greater than 5 feet above the roof line must use an extended roof brace.

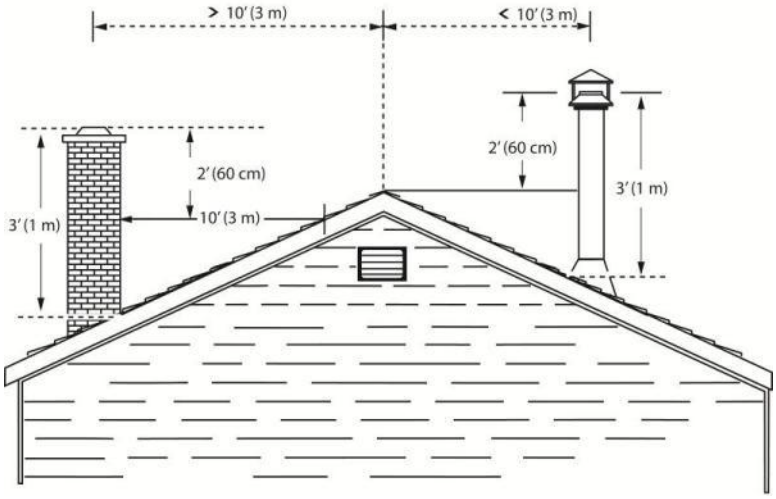

For installing the chimney system in a chase application, the chimney must extend a minimum of 12-inches (30,5 cm) above the flashing.

SIZING THE CHIMNEY SYSTEM

To achieve safe, optimum performance of the appliance, and service life of the chimney, the chimney should be sized correctly for the connected appliance. Occasionally very tall chimneys require downsizing, and very short systems require an increase in size for proper functioning of the appliance. Installations should be done in accordance with the applicable installation code and appliance manufacturers instructions (eg. CSA-B149 for natural gas and propane appliances, and CSA-B139 for fuel oil appliances and CSA-B365 for solid fuel fired appliances). Always size the chimney liner in accordance with the appliance

manufacturer's instructions. Keep in mind that the outside diameter will be 2 ½ inches (6,4 cm) larger than the inside diameter.

This 2100 insulated chimney system may be installed to a maximum height of 60 feet (18,3 m).

ADDITIONAL CONSIDERATIONS

It is recommended, in colder climates, that exterior mounted chimney systems are enclosed to help reduce or limit condensation, creosote build-up and poor draft.

A chimney installed outdoors could result in back-drafting during cold weather when the connected appliance is not operating, weak and unstable draft, increased creosote accumulation, increased potential for condensation of water vapor in the chimney flue and decreased efficiency of the connected appliance.

INSTALLATION PREPARATION

EQUIPMENTS, TOOLS AND HARDWARE

Tools:		**Equipment:**	**Hardware:**
Reciprocating Saw	Plumb Bob	Ladder	#8–1 ½" & 2 ½" Screws
Keyhole Saw	Level	Safety Glasses	Framing Nails
Drill	Tape Measure	Protective Gloves	Roofing Nails
Hammer	Caulk Gun		High-Temp Sealant
Metal Snips	Screwdrivers		Silicone Sealant

2100 chimney system components

- Pipe sections;
- Telescoping sections
- Adapters for twist lock interlocking;
- Elbows 15, 30 and 45 degrees;
- Elbow support;
- Tee with cover;
- Short body tee;
- Tee support;
- Chimney cap;
- Pipe end cap;
- Storm collar;
- Insulated storm collar;
- Vented roof flashing;
- Non-vented roof flashing;
- Snow wedge;
- Round or square ceiling support;
- Insulated ceiling support;
- Square or round extension;
- Trim plate;
- Wall support;
- Finishing cover;
- Roof support;
- Telescoping roof braces;
- Roof line support;
- Wall pass-thru;
- Wall pass-thru extension;
- Insulated masonry thimble;
- Firestop radiation shield;
- Insulated firestop radiation shield;
- Universal adapter;
- Insulated adaptor;
- Anchor plate.

APPROVED INSTALLATIONS

Use of any parts or materials not specified in this installation manual may not provide a listed system and may void the 2100 insulated chimney warranty. Do not attempt matching components or pipe sections with another manufacturer's products. Do not use damaged or modified parts.

SAFETY CONSIDERATIONS

CAUTION	
	The ends of the chimney sections, edges of the cap, roof flashings, tee and other components can be sharp! We strongly recommend the use of gloves during installation.

ATTENTION	
	Watch out for overhead power lines during installation. Be sure to check above and around the chimney for antennas, power lines, or any other obstacles before beginning the installation. Be sure that the chimney does not come in contact with electrical or any other wires.

INSTALLATION EXAMPLES

Ceiling Supported

See page 10

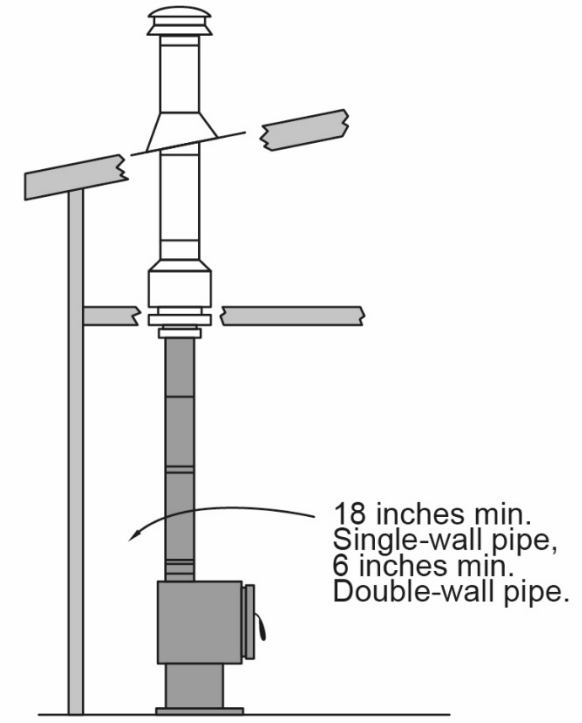

Roof Supported

See page 20

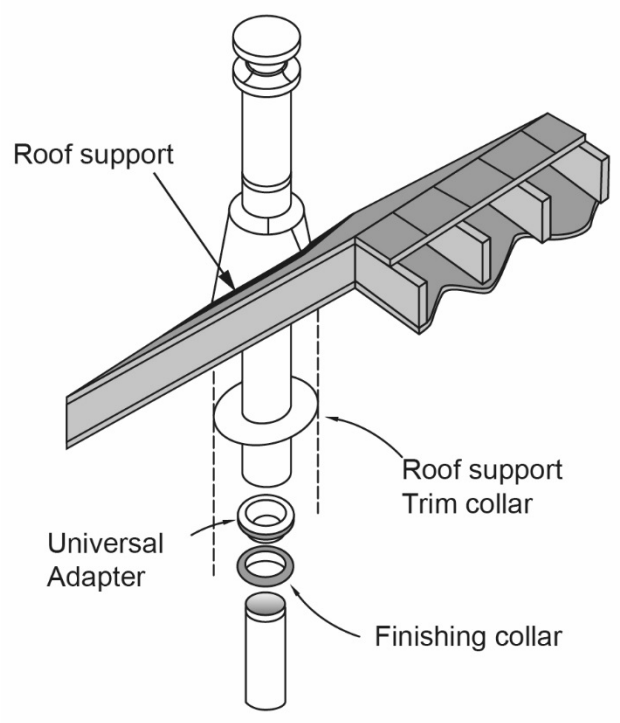

Exterior Supported Installation

See page 22

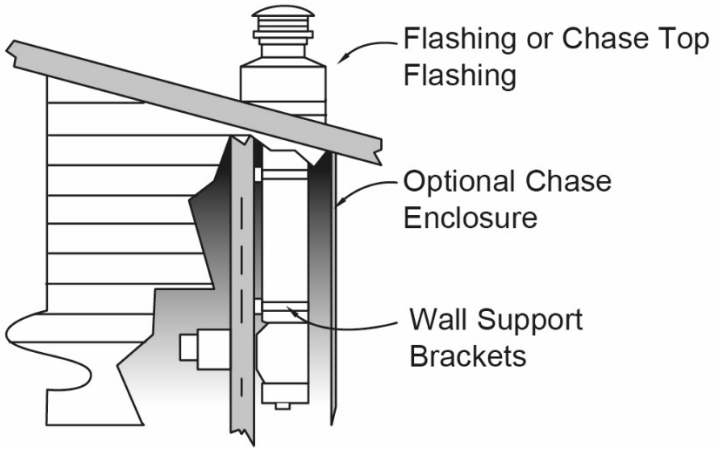

Factory built Fireplace Installation

See page 26

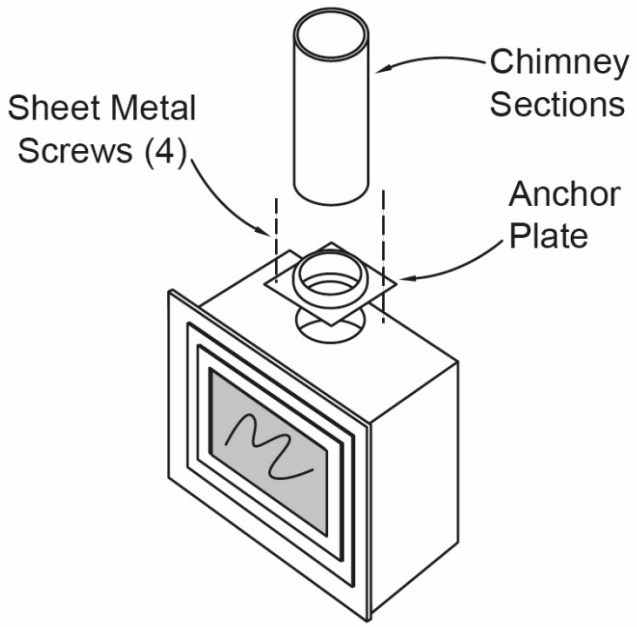

Masonry Fireplace Installation

See page 25

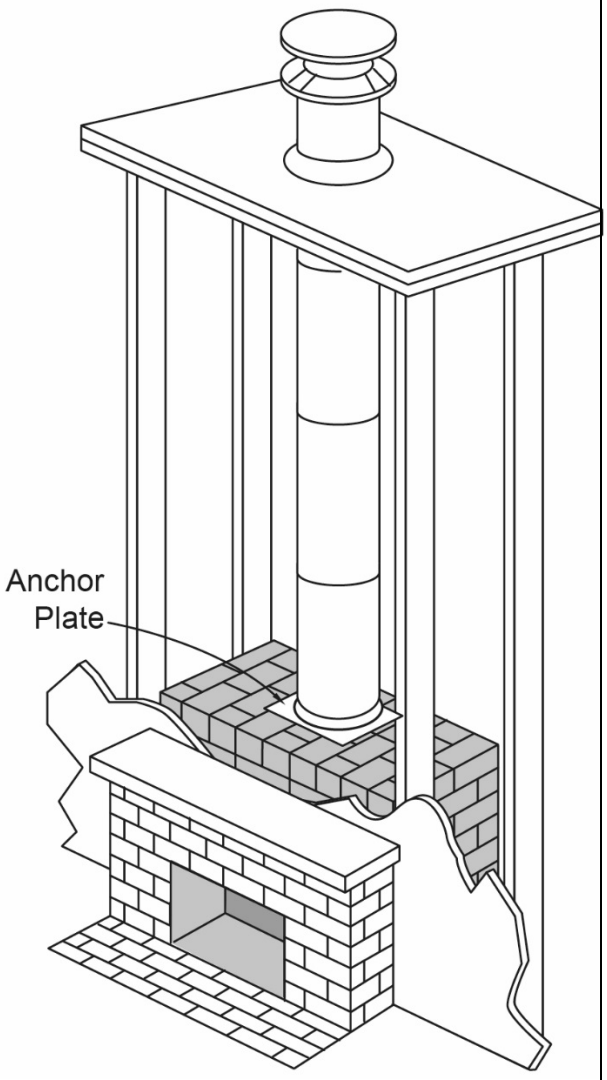

CEILING SUPPORTED INSTALLATION

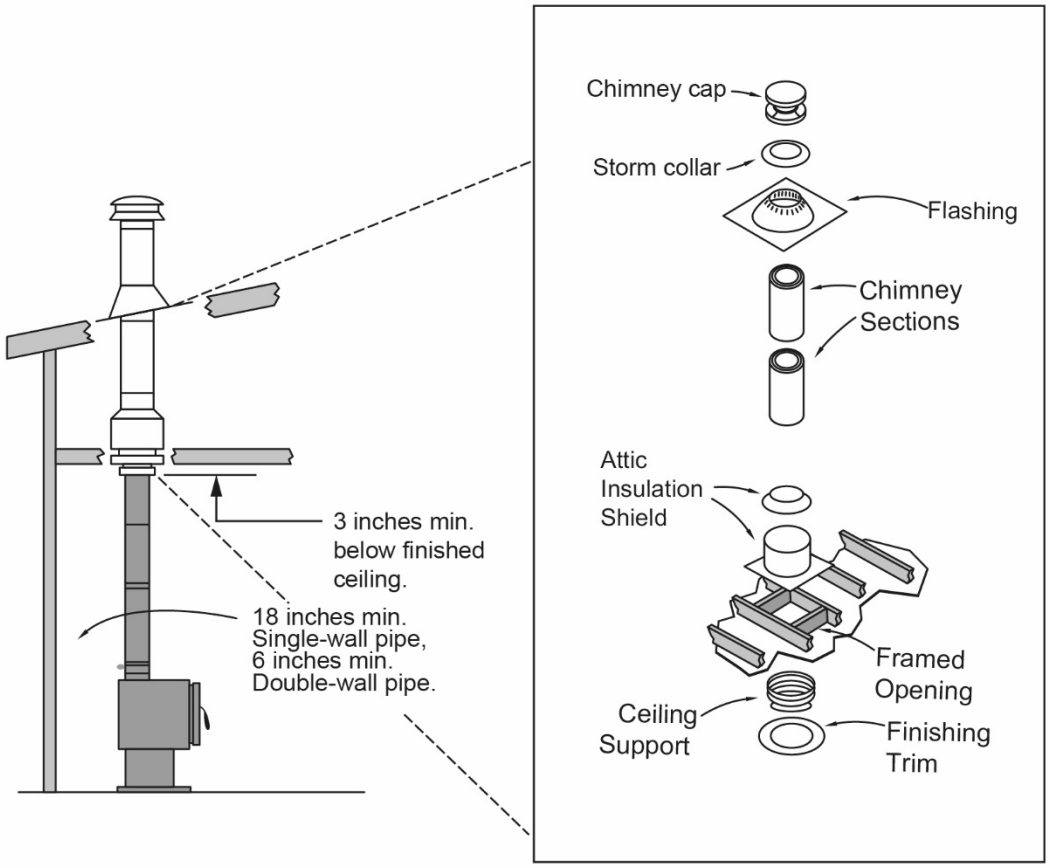

Step 1- Position appliance: Locate appliance in accordance with the appliance manufacturer's instructions and clearance specifications. Pay particular attention to the outlet flue collar of the appliance and endeavor to position it between the rafters and joists above.

Step 2- Frame ceiling opening: use a plumb bob from the ceiling to the center of the appliance outlet flue collar and mark this point on the ceiling above. (Refer to **Table 1** below regarding rough framing dimensions for each chimney diameter). Mark the ceiling for proper rough opening and cut a hole for the appropriate ceiling support. Frame rough opening.

Table 1 - Rough Opening Dimensions			
Inside Chimney Diameter	6" 150 mm	7" 180 mm	8" 200 mm
Round or Square Ceiling Support	12" x 12" 305 mm X 305 mm	13" x 13" 330 mm X 330 mm	14" x 14" 355 mm X 355 mm
Insulated Square Ceiling Support	10,5" x 10,5" 267 mm X 267 mm	11,5" x 11,5" 292 mm X 292 mm	12,5" x 12,5" 318 mm X 318 mm

Table 1 - Rough Opening Dimensions (continued)			
Wall thimble	12" x 12" 305 mm X 305 mm	13" x 13" 330 mm X 330 mm	14" x 14" 355 mm X 355 mm
Firestop Assemblies	12" x 12" 305 mm X 305 mm	13" x 13" 330 mm X 330 mm	14" x 14" 355 mm X 355 mm
Insulated Attic Radiation Shield	12,5" x 12,5" 318 mm X 318 mm	13,5" x 13,5" 343 mm X 343 mm	14,5" x 14,5" 370 mm X 370 mm

Step 3- Ceiling Support Installation:

In a multi-story installation, if the chimney passes through an occupied space, which includes closets and occupied attics, an enclosure must be constructed around the chimney. The enclosure may be constructed with standard framing and sheeting materials such as sheet rock or plywood. **Be sure to maintain 2 inches (51 mm) of air space between the chimney and combustibles.**

Option 1 - Round or Square Ceiling Support (Standard) – may only be used in flat ceiling applications. Level the Ceiling Support into the rough opening and secure to the framing using a minimum of three 8-penny nails or three #8 x 1 ½" wood screws per side (at least 12 nails total). Secure the trim collar using screws supplied with the collar. ***The bottom of the support must extend 3"(75 mm) or more below the ceiling***.

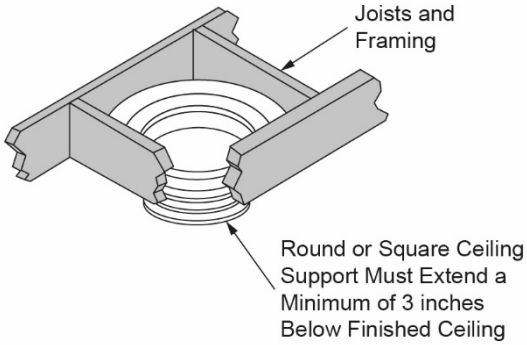

Option 2 - Round or Square Ceiling Support (Tall Style) – may be used for cathedral ceilings and may be used as well for flat ceiling applications. Level the Ceiling Support into the rough opening and secure to the framing using a minimum of three 8-penny nails or three #8 x 1 ½" wood screws per side (at least 12 nails total). Secure the trim collar using screws supplied with the collar. ***The bottom section of the support must extend a minimum of 3-inches (75 mm) below the ceiling.***

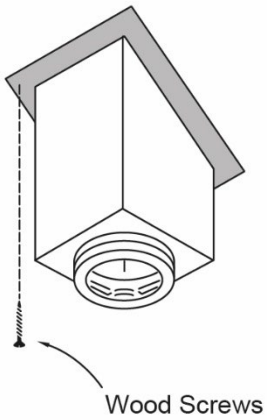

Option 3 - Insulated Square Ceiling Support. For installation with an appliance requiring a 6 inch (150 mm) chimney, in a house with joists spaced 12 inches apart, it is possible to use an Insulated Square Ceiling Support. Installation is the same as a long, uninsulated square ceiling support. Attach the finishing collar using the screws provided with the collar.

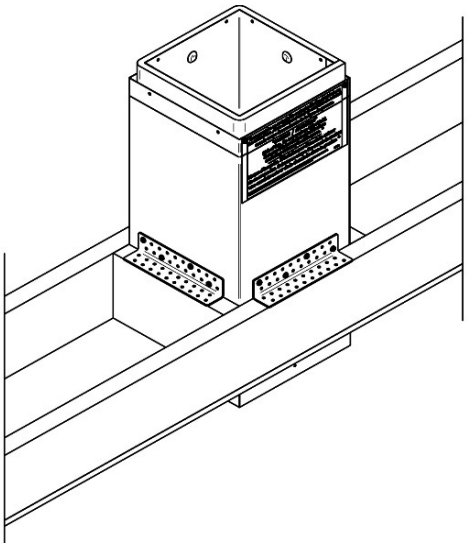

Note that it is **forbidden to install a flashing collar on the Insulated Ceiling Support** when it is used in an enclosure.

The lowest part of the bracket must protrude 3 inches (75 mm) or more below the finished ceiling.

Step 4- Frame Additional Openings (for multi-story installations):

In a multi-story installation, if the chimney passes through an occupied space, which includes closets and occupied attics, an enclosure must be constructed around the chimney. The enclosure may be constructed with standard framing and sheeting materials such as sheet rock or plywood. **Be sure to maintain 2 inches (51 mm) of air space between the chimney and combustibles.**

This is a required step for multi-floor installations where the chimney must pass through additional ceilings (floors). Using dimensions from **Table 1** (page 10), frame out each ceiling (floor) opening above the support box. Use a plumb bob to assist in locating the corresponding four corners of the opening above. (If elbows are used to offset an obstruction refer to page 18).

Option 1 - Install a Firestop Radiation Shield at each floor penetration above the ceiling support. The Firestop Radiation Shield is installed from the bottom of the ceiling/floor rough opening with the tube section of the Firestop pointing upwards. Secure the Firestop to the rough opening with a minimum of one 8-penny nail or one #8 x 1 ½" wood screw at each corner. Adjust the inner tube of the firestop upward to cover all framing of the floor/ceiling rough opening. Secure the inner tube to the outer tube using at least three sheet metal screws.

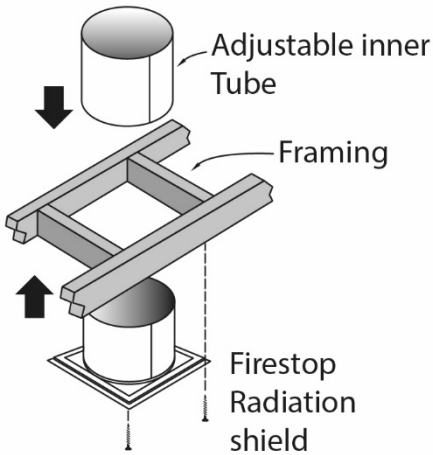

Option 2 - Insulated Square Ceiling Support. For installation with an appliance requiring a 6 inch (150 mm) chimney, in a house with joists spaced 12 inches apart, it is possible to use an Insulated Square Ceiling Support. Installation is the same as a long, uninsulated square ceiling support.

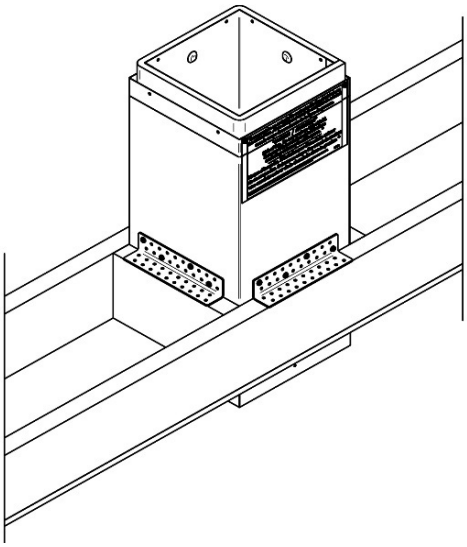

Note that it is **forbidden to install a flashing collar on the Insulated Ceiling Support** when it is used in an enclosure.

The lowest part of the bracket must protrude 3 inches (75 mm) or more below the finished ceiling.

Step 5 – Attic Insulation Shield Installation. The purpose of Attic Insulation Shielding is to maintain the required 2-inch (51 mm) airspace clearance from debris, electrical wiring and insulation when the chimney passes into an attic. This vital step can be accomplished with three different methods:

Option 1 – Use this method when a standard round ceiling support or a Firestop has been installed in the ceiling below the attic floor. Once the chimney sections are in place, a storm collar will be fitted around a chimney section. Slide the storm collar down to fit against the Attic Insulation Shield. This prevents debris from entering the cavity between the chimney and the Attic Insulation Shield. The enclosure may be constructed with standard framing and sheeting materials such as sheet rock or plywood. **Be sure to maintain 2 inches (51 mm) of air space between the chimney and combustibles.**

Option 2 - Use this method when insulation against cold is needed. In the attic opening, use an insulated attic radiation shield (A) and an insulated flashing collar (B).

1. The insulated attic radiation shield (A) is to be installed from the bottom of the ceiling / attic opening. The pipe section must be pointing up. Attach the radiation shield to the rough opening with at least (1) No. 8d nail or (1) wood screws 8 x 1 ½ inch to each corner.

2. Subsequently, install the insulated flashing collar (B) around the chimney that exceeds the attic opening. The collar must be secured in place with 4 self-tapping screws # 8 x 1/2 "(C). To do this, fold the 4 mounting tabs and make sure that the collar is pressed against the isolated section of radiation shield.

3. Make sure that the flashing collar is pressed against the isolated section of the attic radiation shield

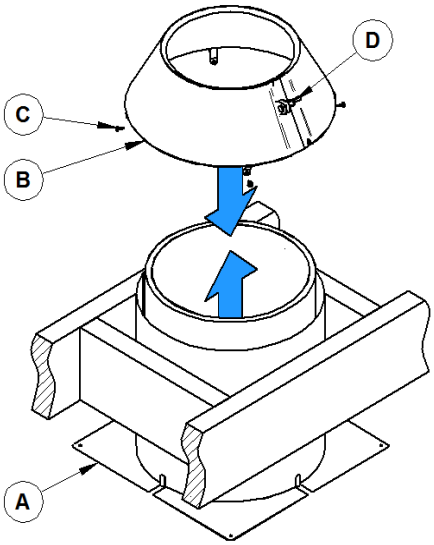

4. Fasten the clamping nut (D) and make sure it is well fastened to prevent an excessive opening on top.

5. Make sure there is no attic insulation touching the attic radiation shield higher than the marking that delimits the area provided for the attic insulation material (E).

Caution: This attic radiation shield cannot be combined with a round or square ceiling support.

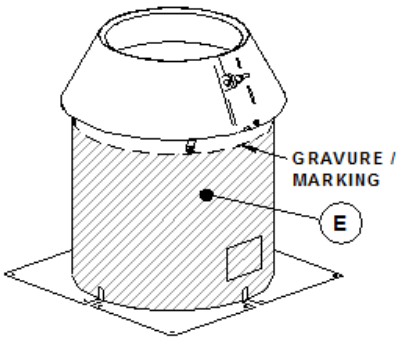

NOTE:

- It is prohibited to install an attic radiation shield in an occupied space including closets and occupied attics. For this type of installation, use a fire stop radiation shield (option 1).
- It is prohibited to install an enclosure around the insulated attic radiation shield.
- The vertical height of the attic insulation shield above attic construction material should accommodate the amount of insulation as required by the National Building Code.

Option 3 - Use this method when installed in a confined space, with a cathedral ceiling, or when the extension of the insulated firewall is not to be used. In the attic opening, use an insulated square ceiling support and insulated flashing collar, sold separately.

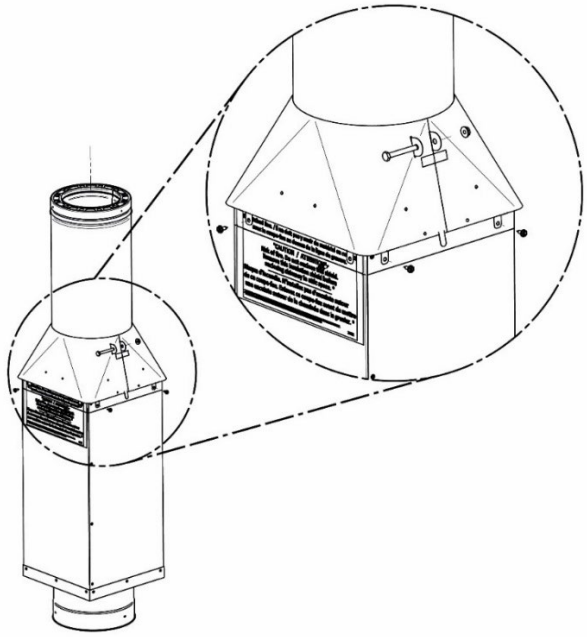

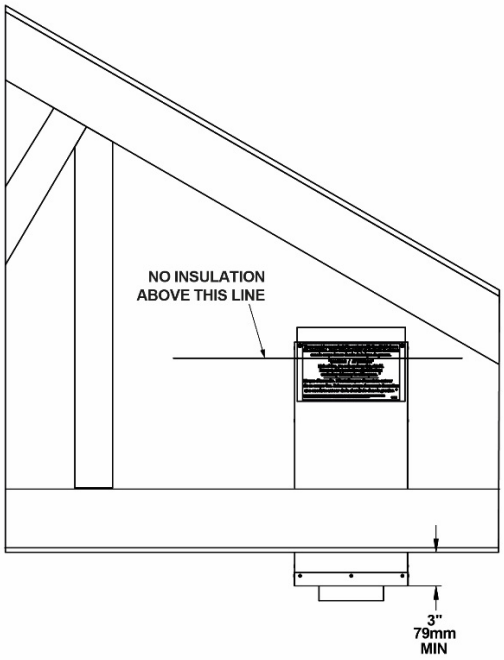

1- Insulated ceiling support installs from the top of the ceiling / attic opening, Attach ceiling bracket to the rough opening with at least (4) n° 8d nail or (4) No.8 x 1 ½" wood screw on each side (at least 12 nails in total).

2- Next, install the flashing collar around the chimney section that protrudes beyond the opening of the ceiling support. The collar must be secured in place with 8 #8 x 1/2" self-drilling screws.

3- Make sure that the collar is properly seated on the insulated section of the ceiling support.

4- Then tighten the clamping nut to tighten the collar around the chimney.

5- Finally, make sure there is no material in contact above the engraving that delimits the area provided for the attic insulation material.

Installing an enclosure around the insulated square ceiling support is prohibited when installed in an attic.

Step 6- The Roof Opening: Use a plumb bob to locate the center of the roof opening as it corresponds to the center of the opening below. Mark the location on the underside of the roof sheeting. Drill a hole using a ¼" bit through the sheeting and shingles in order to have an exterior visible reference. A reciprocating saw is helpful in cutting the opening a minimum of 4-inches (10,2 cm) larger than the chimney's outside diameter. This maintains the required minimum of 2-inch (51 mm) airspace clearance around the chimney.

Step 7- Assemble the Chimney: Secure a universal adapter to the first chimney section. Slide the first chimney section, female end down, into the ceiling support assembly being used. Continue installing the sections upwards using a minimum of three, #8 X ½" self-drilling screws per joint. Never use over-length screws that could penetrate the inner lining of the chimney. The final chimney height should be determined using the specifications found on page 5 under the heading "Termination Above Roof."

Step 8- Completing the Top Termination: Ensure that a 2-inch airspace clearance to combustible is maintained as the chimney passes through the roof opening. It is recommended on steep roof slopes or when the chimney height above the roof exceeds 5 feet (1,5 m), that a roof support bracket is used to assist in stabilizing and leveling the chimney. Using a level, make sure the chimney is vertically plumb.

WARNING: Only a roof support bracket can carry lateral wind loads. The roof flashing is not designed to support or restrain the chimney. Failure to properly support the chimney may result in system damage or unsafe operation. Do not use makeshift materials, substitute components, or improvised installation methods. Any compromise made during installation may impair the performance and safety of the chimney system, potentially resulting in fire, property damage, personal injury, or death.

Slide the roof flashing over the chimney and place the flashing under the upper shingles and on top of the lower shingles. Nail the flashing to the roof along the upper edge and down each side with 1-inch roofing nails, but do not nail the lower edge. Seal the nail heads with a water-proof silicone sealant.

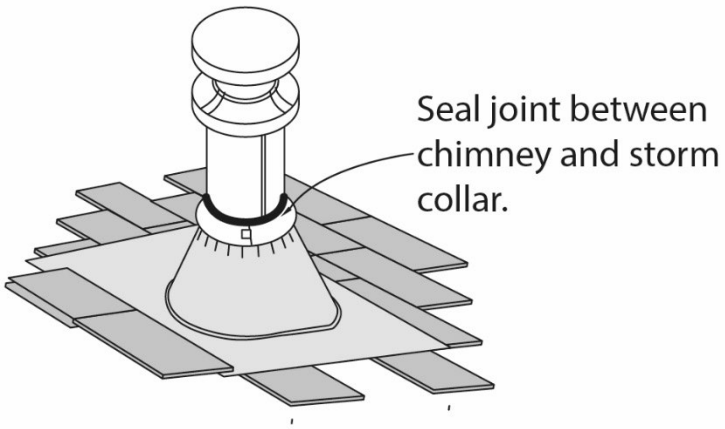

Install a storm collar around the chimney and slide down to fit against the roof flashing. Caulk the joint between the chimney and the storm collar with a waterproof silicone sealant. ***If the flashing is ventilated, do not obstruct ventilating openings.***

Fit the rain cap to the top of the chimney. Attach by tightening the clamp band.

EXTENDED ROOF BRACE INSTALLATION

If the chimney height extends **more than 5 feet (1,5 m)** above the roof line an extended roof brace must be installed. The chimney may not extend more than 5 feet above the extended roof brace. If this does occur, multiple extended roof braces will be needed.

The extended roof brace consists of three parts. The chimney locking band, brace legs and roof brackets.

1. Position the chimney locking band approximately 2/3 of the way up the chimney. Secure the band by tightening the nut and bolt supplied.

2. Fasten one end of the adjustable legs to the chimney roof brace. Adjust the length of the adjustable legs so that they form approximately a 45-degree angle with the chimney and the two braces should be approximately 90 degrees apart. Mark these two locations on the roof.

3. Mount the two roof brackets at the two locations marked above. Use six 1-inch roofing nails per bracket and seal the nail heads with a waterproof silicone sealant.

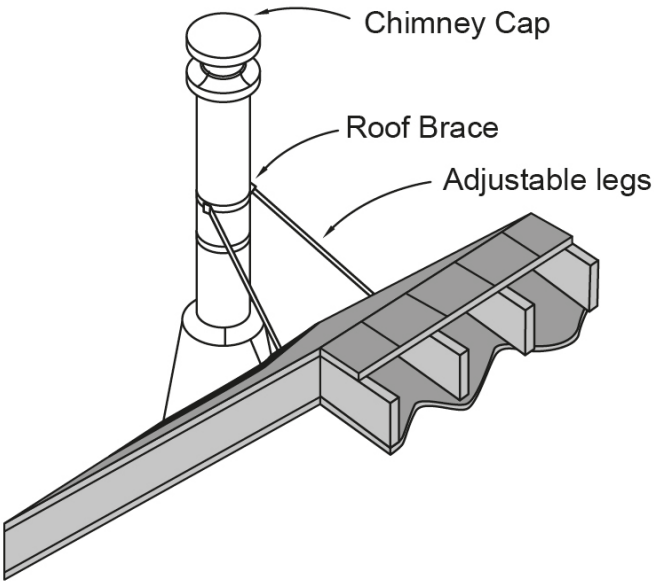

4. Secure the adjustable legs to the roof brackets using the nuts and bolts provided.

5. Ensure that there is at least 3 inches of overlap between the two sections of each brace leg. There is a hole provided in the outer half of the brace leg. Using the hole provided, drill a ¼" hole completely through the inner and outer sections.

6. Use the nut and bolt supplied to pin both sections of the adjustable legs.

7. With final adjustments and tightening of all hardware, use three self-drilling screws to further secure the chimney locking band to the chimney section

OFFSET OR ELBOW INSTALLATION

Since a completely vertical chimney provides optimal draft it is best to avoid elbows if at all possible. However, when elbows are necessary to avoid obstructions such as joists or rafters, use no more than two pairs of elbows (total of four elbows) and do not exceed a maximum angle of 30 degrees in the USA and 45 degrees in Canada. Refer to **Table 2** (page **Erreur ! Signet non défini.**) to determine what elbows and chimney sections will be needed for the required offset.

1. Install the first elbow onto the chimney. Turn the elbow to the required direction and secure it to the chimney with a minimum of three self-drilling screws.

2. Place the required length of chimney section to the elbow. A telescoping chimney section is useful to obtain exact length desired. Secure the section to the elbow with a minimum of three self-drilling screws.

3. Install the second elbow to return the chimney to vertical. Secure the elbow to the chimney section with a minimum of three self-drilling screws.

4. An offset support bracket or a roof support bracket must be installed above each offset to support the chimney weight above the offset.

Note: *After the offset, use a level to ensure that the chimney returns to vertical.*

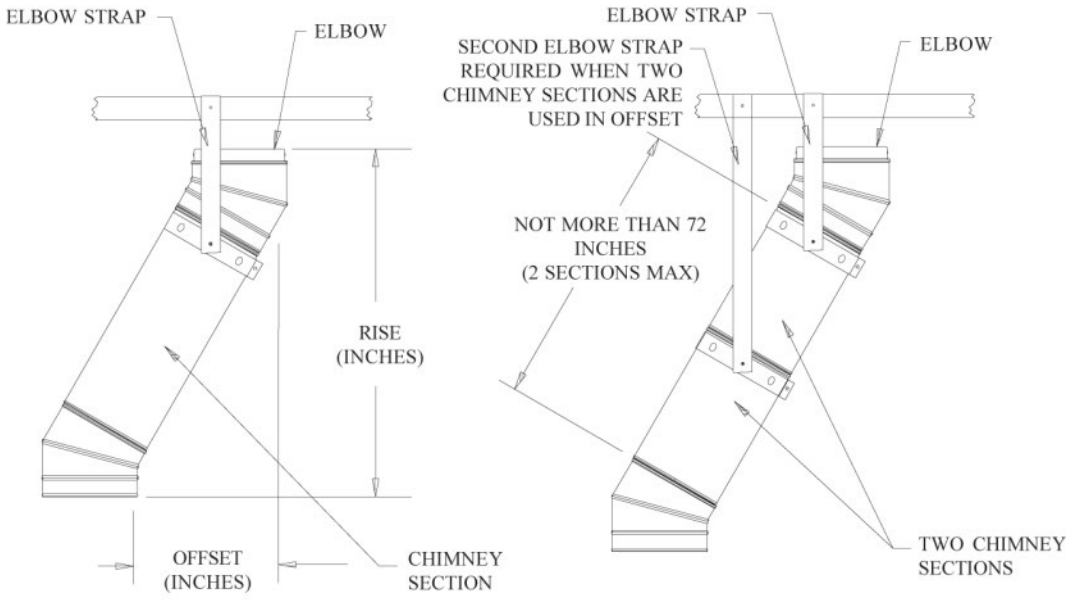

Table 2

ELBOW OFFSET / DÉVOIEMENT (DÉVIATION ENTRE LES COUDES)																		
(B) Pipe length Between Elbow/ Longueur de tuyau entre les coudes	15°						30°						45°					
	(D) Rise/ Élévation			(C) Offset / Déviation			(D) Rise/ Élévation			(C) Offset / Déviation			(D) Rise/ Élévation			(C) Offset / Déviation		
	(A) Elbow size / Diamètre de coude						(A) Elbow size / Diamètre de coude						(A) Elbow size / Diamètre de coude					
	6"	7"	8"	6"	7"	8"	6"	7"	8"	6"	7"	8"	6"	7"	8"	6"	7"	8"
0"	11 1/8	11 3/8	11 5/8	1 1/4	1 1/4	1 1/4	13 3/4	14 1/4	14 3/4	3 1/8	3 1/4	3 3/8	15	15 3/4	16 1/2	5 1/2	5 7/8	6 1/8
12"	21 1/4	21 1/2	21 3/4	3 7/8	4	4	22 7/8	23 3/8	23 7/8	8 3/8	8 1/2	8 5/8	22 1/2	23	23 5/8	12 3/4	13	13 3/8
18"	27	27 1/4	27 1/2	5 1/2	5 1/2	5 1/2	28	28 1/2	29	11 3/8	11 1/2	11 5/8	26 1/2	27 1/4	27 7/8	17	17 1/4	17 1/2
24"	32 7/8	33	33 3/8	7	7	7 1/8	33 1/4	33 3/4	34 1/4	14 3/8	14 1/2	14 5/8	30 3/4	31 1/2	32 1/8	21 1/4	21 1/2	21 7/8
36"	44 3/8	44 5/8	44 7/8	10 1/8	10 1/8	10 1/4	43 5/8	44 1/8	44 5/8	20 3/8	20 1/2	20 5/8	39 1/4	40	40 5/8	29 3/4	30	30 1/4
48"	56	56 1/4	56 1/2	13 1/4	13 1/4	13 1/4	54	54 1/2	55	26 3/8	26 1/2	26 5/8	47 3/4	48 3/8	49 1/8	38 1/4	38 1/2	38 3/4
48"+12"	67 5/8	67 7/8	68 1/8	16 3/8	16 3/8	16 3/8	64 3/8	64 7/8	65 3/8	32 3/8	32 1/2	32 5/8	56 1/4	56 7/8	57 5/8	46 5/8	47	47 1/4
48"+18"	73 3/8	73 5/8	73 7/8	17 7/8	17 7/8	18	69 5/8	70 1/8	70 5/8	35 3/8	35 1/2	35 5/8	60 1/2	61 1/8	61 7/8	50 7/8	51 1/4	51 1/2
48"+24"	79 1/8	79 3/8	79 3/4	19 1/2	19 1/2	19 1/2	74 3/4	75 1/4	75 3/4	38 3/8	38 1/2	38 5/8	64 3/4	65 3/8	66 1/8	55 1/8	55 1/2	55 3/4

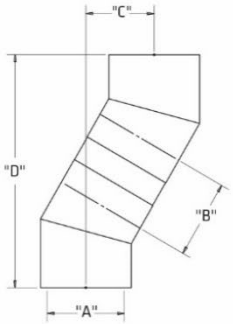

**45° elbows are allowed in Canada only.*

ROOF SUPPORTED INSTALLATION

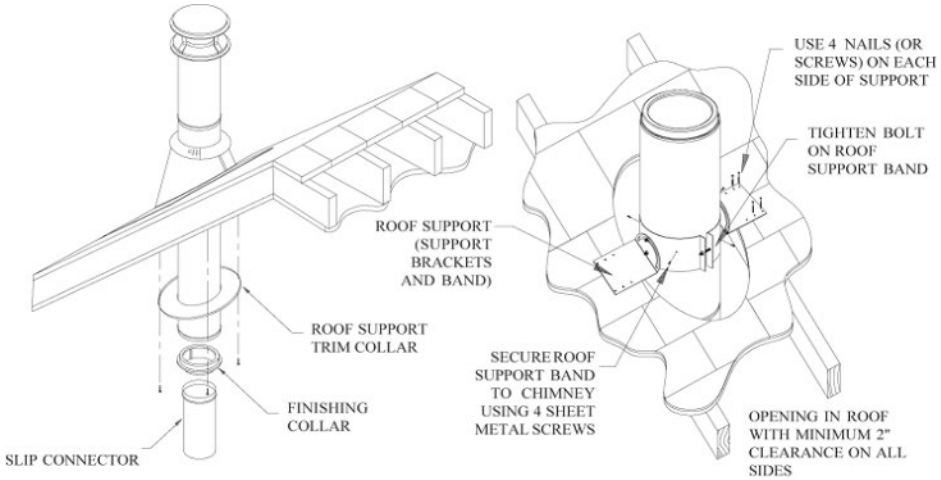

Roof supported installations are popular in A-frame/Chalet type homes. In roof supported installations, there are typically two scenarios. One utilizes a square or round cathedral ceiling support and the second simply utilizes a roof support bracket.

SCENARIO #1 - CATHEDRAL CEILING SUPPORT (SQUARE OR ROUND)

Step 1- Position appliance: locate appliance in accordance with the appliance manufacturer's instructions and clearance specifications. Pay particular attention to the outlet flue collar of the appliance and endeavor to position it between the rafters and joists above.

Step 2- Frame rough opening: Cut roof and ceiling openings as in the case of low attic installations. In the case of cathedral ceilings, a hole is only cut through the roof. Please refer to **Step 2** on page 10 for ceiling openings and **Step 5** on page 15 for roof openings. Also, refer to **Table 1** on page 10 for rough opening dimensions.

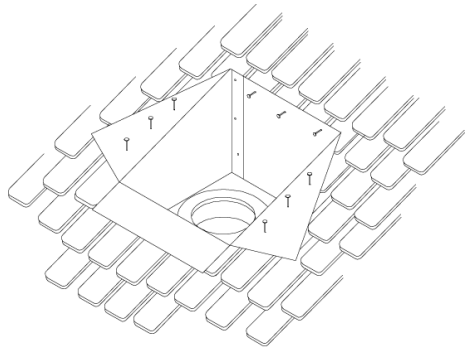

Step 3- Ceiling support installation, (insulated or not insulated): Level the Ceiling Support into the rough opening and secure to the framing using a minimum of three 8-penny nails or three #8 x 1 ½" wood screws per side. Secure the trim collar using screws supplied with the collar. The ceiling support must extend 3-inches (7,6 cm) below the ceiling. In most cases, the ceiling support will extend above the roof opening. You can either trim the support to be flush with the roof or slit the corners of the square support and fold them down flat against the roof. Nail flaps with 1-inch roofing nails.

Step 4- Finish the installation: Following **Steps 6** thru **8**, starting on page 15.

SCENARIO #2 - ROOF SUPPORT BRACKET

A roof support bracket type installation is used for cathedral ceilings where a cathedral ceiling support is not preferred. This type of installation involves 2100 insulated chimney pipe being visible below the ceiling level. *Note: A roof support bracket can support no more than a total of 45 feet of 2100 insulated Chimney Pipe, and no more than 20 feet below the roof support bracket. See table 3 on page 24.*

Step 1- Position appliance: locate appliance in accordance with the appliance manufacturer's instructions and clearance specifications. Pay particular attention to the outlet flue collar of the appliance and endeavor to position it between the rafters and joists above.

Step 2- The Roof Opening: Use a plumb bob to locate the center of the roof opening as it corresponds to the center of the opening below. Mark the location on the underside of the roof sheeting. Drill a hole using a ¼" bit through the sheeting and shingles in order to have an exterior visible reference. A reciprocating saw is helpful in cutting the opening a minimum of 4-inches (10,2 cm) larger than the chimney's outside diameter. This maintains the required minimum of 2-inch (5 cm) airspace clearance around the chimney. *Note: The roof opening must be sized to **Table 1** on page 10 and framed out with the appropriate sized construction lumber. DO NOT mount Roof Support Bracket to sheathing only!*

Step 3- Secure roof support bracket: Secure the roof support bracket to the roof using four 6-penny nails or four #8 x 1 ½" screws per side. Using one section of the 2100 insulated chimney, position it at the proper height into the living space. Ensure that the chimney extends at least 3 inches (7,6 cm) below the ceiling level. Tighten the roof support bracket band to that chimney section by tightening the nut bolt. Using a minimum of four self-drilling screws, screw the band to the chimney section.

Step 4- Assemble the Chimney: Attach the remaining chimney sections above and below the roof level. Use a minimum of three self-drilling screws to attach per joint.

Step 5- Trim Collar – Slide trim collar over the 2100 insulated chimney and attach to ceiling using screws provided. Attach universal adapter to the lowest section of the 2100 insulated chimney to attach connector pipe below. Use a minimum of three self-drilling screws. *Note: a finishing collar should be installed over the universal adapter for appearance purposes only. Ensure the connector pipe maintains the proper clearance to combustibles. See page 5.*

Step 6- Finish the installation: Please refer to **Step 8** on page 15 to complete the installation

EXTERIOR SUPPORTED INSTALLATION

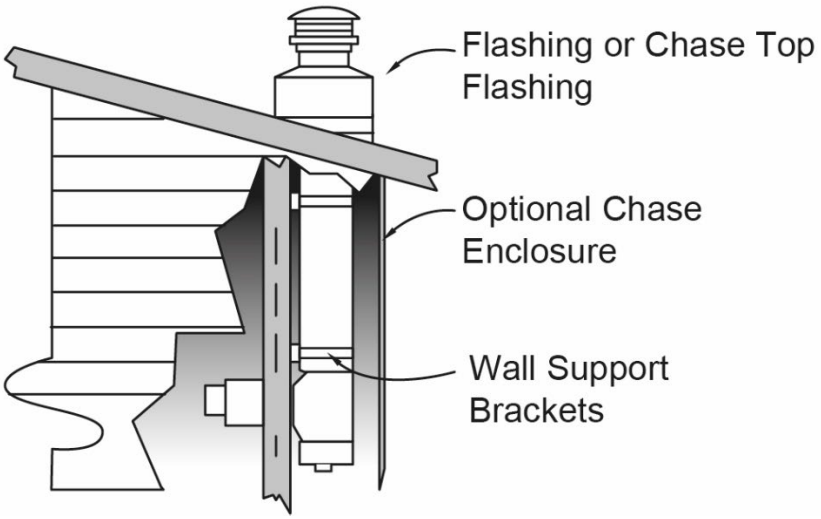

Exterior supported installations are used when passing through a living space to an exterior mounted chimney. The exterior supported installation uses our secure wall support bracketing system that provides lateral and vertical weight bearing support.

Note: The total height of the chimney from tee to top termination should not exceed 60 ft (18,3 m).

Step 1- Position appliance: locate appliance in accordance with the appliance manufacturer's instructions and clearance specifications. Pay particular attention to the outlet flue collar of the appliance and endeavor to position it between the wall studs.

Step 2- Rough frame wall opening: The wall opening should be centered between two wall studs. To determine the height of the opening it is helpful to preassemble stove connector pipe and fit to flue outlet collar. Mark location on wall. Cut and frame opening. Refer to **Table 1** on page 10 for rough opening dimensions.

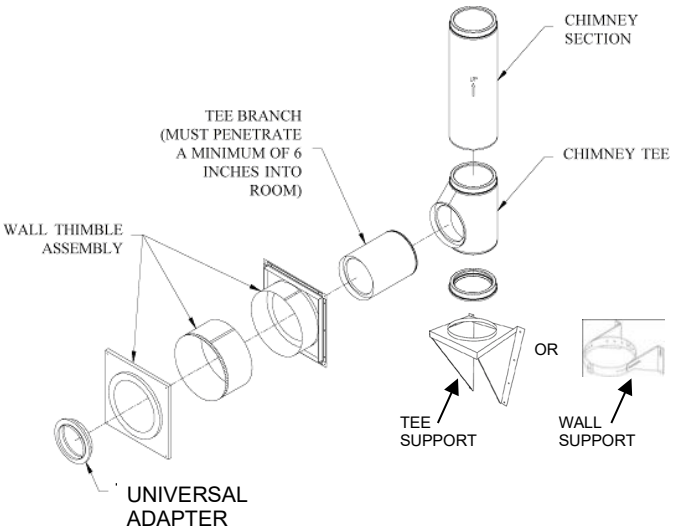

Step 3- Wall thimble installation: The wall thimble assembly consists of three parts: The exterior firestop section, the adjustable extension and the interior trim plate. Install the firestop section on the outside wall with the tube section pointing to the structure interior. It is recommended to seal the outside edges of the firestop section with a water-proof silicone sealant.

Secure to the framing with a minimum of four 8-penny nails or four #8 x 1 ½" wood screws. From the interior, slide the adjustable extension onto the firestop section tube. Adjust the extension so that it will be flush with the interior trim plate once installed. Use a minimum of three self-drilling screws to secure the adjustable extension to the firestop section tube.

Step 4- Wall support bracketing: Determine the chimney section length needed from the tee take-off to the structure interior. A telescoping chimney section is useful to obtain exact length desired. Keep in mind, the chimney must penetrate through the wall a minimum of 6 inches (15,2 cm) into the interior. Secure this length of chimney to the tee take-off using a minimum of 3 self-drilling screws. Then, secure a full-length chimney section to the top of the tee using a minimum of three self-drilling screws. Loosely install a wall support bracket on the first vertical chimney section above the tee. Install this assembly with the tee take-off chimney section going through the wall thimble. Using a level, plumb the vertical chimney section and attach the wall bracket. Secure the wall support bracket to the outside wall using a minimum of four #8 x 2 ½" screws. It is recommended to endeavor securing wall support brackets into framing members rather than sheeting only. Further, secure the wall support bracket to the chimney section by tightening the nut/bolt and use a minimum of three self-drilling screws through the predrilled holes of the wall support bracket band into the chimney section. Install the tee cap onto the bottom of the tee using a minimum of three self-drilling screws.

Optional tee cleanout - If desired an additional chimney section may be added to the bottom of the tee for chimney cleanout purposes. Then simply add a tee cap to the bottom of the cleanout section. Ensure that the cleanout tee and any added sections below for cleanout purposes maintain the required 2-inch airspace to combustible. **Note to the installer:** Adequate room should be left under the cleanout to allow for the use of emptying the cleanout and/or sweeping from the bottom. The 2" clearance to any combustible including finished grade (ground) is minimum.

Step 5- Trim plate and transition collar: From the interior, slide the Finished Trim Plate Section of the Wall Pass Through (Thimble) over the horizontal section of the chimney and secure it to the framed opening using screws supplied. Secure the Universal Adapter to the end of the horizontal chimney section using a minimum of three self-drilling screws. *Note: A Finishing Collar should be installed over the universal adapter for appearance purposes only.* The stove connector pipe can now be secured to the universal adapter.

Step 6- Assembling the chimney: Attach the remaining chimney sections above while still maintaining the required 2-inch airspace to combustible. Use a minimum of three self-drilling screws to attach per joint. **Wall support brackets will need to be installed no more than 8 feet apart along the vertical chimney length.**

Step 7- Finishing the installation:

Option 1 – Non-chase enclosed chimney: The final chimney height should be determined using the specifications found on page 5 under the heading "Termination Above Roof." Based on final chimney height determine if an extended roof brace will be needed. If so, follow the instructions on page 17 under the heading "Optional Extended Roof Brace Installation."

Option 2 – A chase enclosed chimney: For installing the chimney system in a chase application, the chimney must extend a minimum of 6 inches above the chase cover. Please ensure that the chimney exterior has the required 2-inch airspace clearance from all chase enclosure combustible including the hole in the chase enclosure top sheathing. The chase enclosure top can be finished using either standard flat roofing materials or a custom fabricated metal chase cover.

Note 1: *It is recommended, in colder climates, that exterior mounted chimney systems are enclosed to help reduce or limit condensation, creosote build-up and poor draft.*

Note 2: *It is recommended to provide some means of chase enclosure ventilation. This is usually accomplished by placing the storm collar approximately 2 inches above the chase collar.*

Completion - Install a storm collar around the chimney and slide down to fit against the roof flashing. Caulk the joint between the chimney and the storm collar with a waterproof silicone sealant. Fit the rain cap to the top of the chimney. Attach by tightening the clamp band.

Table 3 - Load Capacity				
		Maximum height		
Class-A diameter	**Code**	**6"**	**7"**	**8"**
Square ceiling support	CVA-CCS NA-CCS	60'	55'	50'
Insulated square ceiling support for stove	CVA-ICCS NA-ICCS	60'	55'	50'
Insulated square ceiling support for fireplace	CVA-ICCS-C NA-ICCS-C	40'	35'	30'
Round Square ceiling support	CVA-CCR NA-CCR	60'	55'	50'
Roof support *(No more than 20' below the support)*	CVA-RS58 NA-RS58	45'	40'	35'
Tee support	CVA-TS NA-TS	60'	55'	50'
Wall support	CVA-WS58 NA-WS58	8'	8'	8'
Extended wall support	CVA-WSE58 NA-WSE58	8'	8'	8'
Elbows support *(Chimney section between elbows)*	CVA-ELS58 NA-ELS58	72"	72"	72"

MASONRY FIREPLACE INSTALLATION

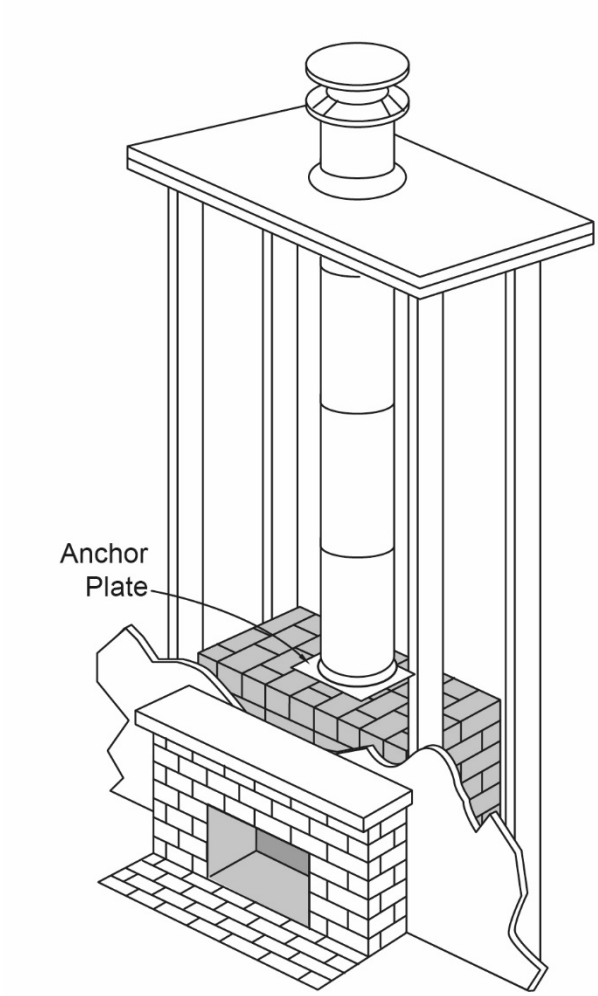

Step 1- To properly size the chimney for a masonry fireplace, the cross-sectional area of the chimney (ID – inner diameter) is to be a minimum of 1/12th of the area of the firebox opening.

Step 2- Install fireplace anchor plate. Seal the fireplace anchor plate to the masonry flue opening with high temperature adhesive/sealant. Further secure the fireplace anchor plate in each corner with four ¼" x 2" tapcon type masonry anchors. Always maintain a 1-inch airspace clearance from the mounting plate to combustible. *Note: Make sure the mounting plate is level and anchored to a flat surface. Modify the masonry to obtain a flat level surface if needed.*

Step 3- Assemble the Chimney: Secure the first chimney section to the fireplace anchor plate with a minimum of three self-drilling screws. Attach the remaining chimney sections above while still maintaining the required 2-inch airspace between combustible. Use a minimum of three self-drilling screws to attach per joint. **Wall support brackets will need to be installed no more than 8 feet apart along the vertical chimney length.** The final chimney height should be determined using the specifications found on page 5 under the heading "Termination Above Roof." Be sure to enclose the chimney if it should pass through occupied areas.

Step 4- Completing the top termination: Please refer to **Step 8** on page 15 for instructions to complete the top termination. If the chimney is within a chase enclosure, please refer to page 24, **Step 7**, **Option 2**.

FACTORY BUILT ZERO CLEARANCE FIREPLACE INSTALLATION

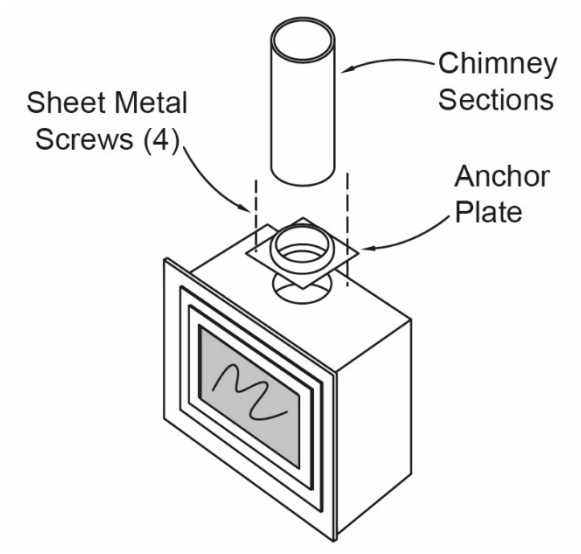

Only install the 2100 insulated Chimney System with factory built, or zero clearance fireplaces, that approve its use. **Be sure to read thoroughly and follow the fireplace manufacturer's installation instructions.**

Step 1- Install fireplace anchor plate. Seal the fireplace anchor plate to the flue opening of the fireplace with high temperature adhesive/sealant if permitted by the manufacturer. Secure the fireplace anchor plate in each corner with four ½" sheet metal screws. Always maintain a 1-inch airspace clearance from the anchor plate to combustibles.

Step 2- Framing Opening

If the chimney passes through an occupied space, which includes closets and occupied attics, an enclosure must be constructed around the chimney. The enclosure may be constructed with standard framing and sheeting materials such as sheet rock or plywood. **Be sure to maintain 2 inches (51 mm) of air space between the chimney and combustibles.**

This is a required step for multi-floor installations where the chimney must pass through additional ceilings (floors). Using dimensions from **Table 1** (page 10), frame out each ceiling (floor) opening above the support box. Use a plumb bob to assist in locating the corresponding four corners of the opening above. (If elbows are used to offset an obstruction refer to page 18).

Option 1 - Install a Firestop Radiation Shield at each floor penetration above the ceiling support. The Firestop Radiation Shield is installed from the bottom of the ceiling/floor rough opening with the tube section of the Firestop pointing upwards. Secure the Firestop to the rough opening with a minimum of one 8-penny nail or one #8 x 1 ½" wood screw at each corner. Adjust the inner tube of the firestop upward to cover all framing of the floor/ceiling rough opening. Secure the inner tube to the outer tube using at least three sheet metal screws.

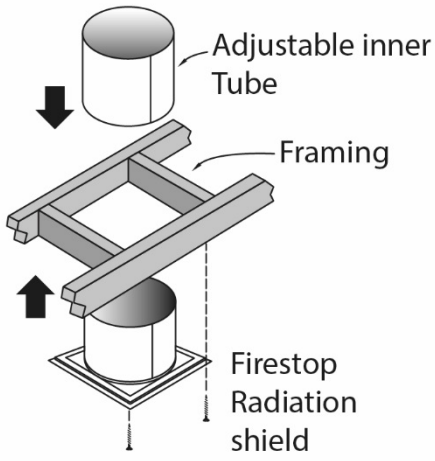

Option 2 - Insulated Square Ceiling Support. For installation with an appliance requiring a 6 inch (150 mm) chimney, in a house with joists spaced 12 inches apart, it is possible to use an Insulated Square Ceiling Support. Installation is the same as a long, uninsulated square ceiling support. Attach the finishing collar using the screws provided with the collar.

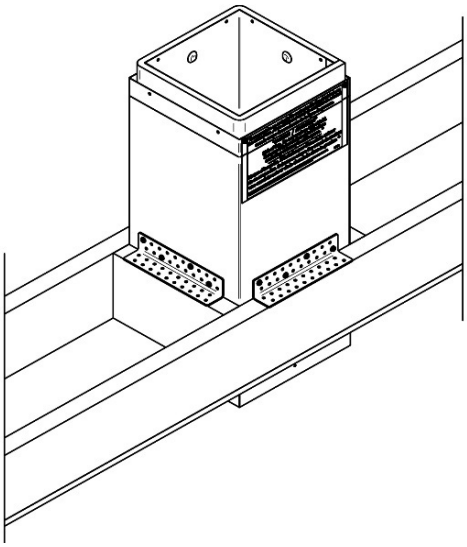

Note that it is **forbidden to install a flashing collar on the Insulated Ceiling Support** when it is used in an enclosure.

The lowest part of the bracket must protrude 3 inches (75 mm) or more below the finished ceiling.

Step 3 – Attic Insulation Shield Installation. The purpose of Attic Insulation Shielding is to maintain the required 2-inch (51 mm) airspace clearance from debris, electrical wiring and insulation when the chimney passes into an attic. This vital step can be accomplished with three different methods:

Option 1 – Use this method when a standard round ceiling support or a Firestop has been installed in the ceiling below the attic floor. Once the chimney sections are in place, a storm collar will be fitted around a chimney section. Slide the storm collar down to fit against the Attic Insulation Shield. This prevents debris from entering the cavity between the chimney and the Attic Insulation Shield.

Option 2 - Use this method when insulation against cold is needed. In the attic opening, use an insulated attic radiation shield (A) and an insulated flashing collar (B).

1. The insulated attic radiation shield (A) is to be installed from the bottom of the ceiling / attic opening. The pipe section must be pointing up. Attach the radiation shield to the rough opening with at least (1) No. 8d nail or (1) wood screws 8 x 1 ½" to each corner.

2. Subsequently, install the insulated flashing collar (B) around the chimney that exceeds the attic opening. The collar must be secured in place with 4 self-tapping screws # 8 x 1/2" (C). To do this, fold the 4 mounting tabs and make sure that the collar is pressed against the isolated section of radiation shield.

3. Make sure that the flashing collar is pressed against the isolated section of the attic radiation shield

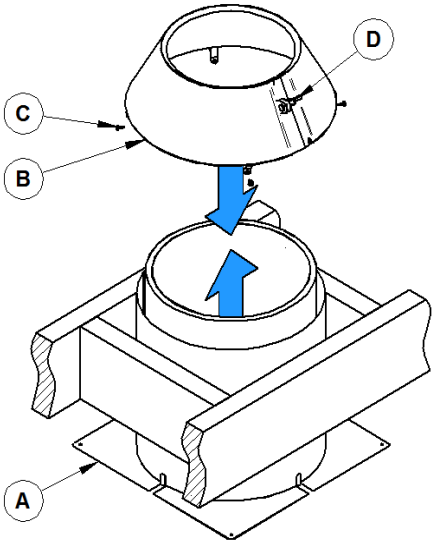

4. Fasten the clamping nut (D) and make sure it is well fastened to prevent an excessive opening on top.

5. Make sure there is no attic insulation touching the attic radiation shield higher than the marking that delimits the area provided for the attic insulation material (E).

Caution: This attic radiation shield cannot be combined with a round or square ceiling support.

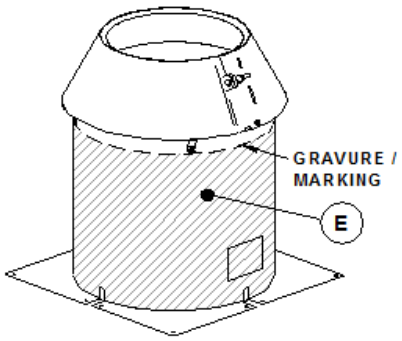

NOTE:

- It is prohibited to install an attic radiation shield in an occupied space including closets and occupied attics. For this type of installation, use a fire stop radiation shield (option 1).

- It is prohibited to install an enclosure around the insulated attic radiation shield.

Option 3 - Use this method when installed in a confined space, with a cathedral ceiling, or when the extension of the insulated firewall is not to be used. In the attic opening, use an insulated square ceiling support and insulated flashing collar, sold separately.

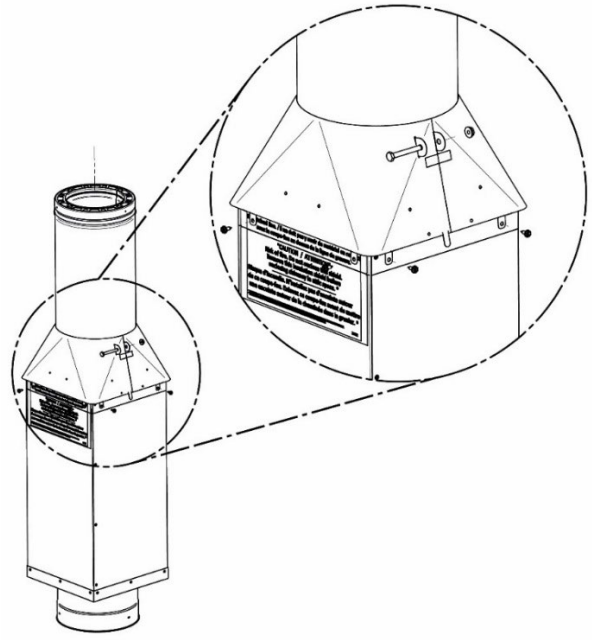

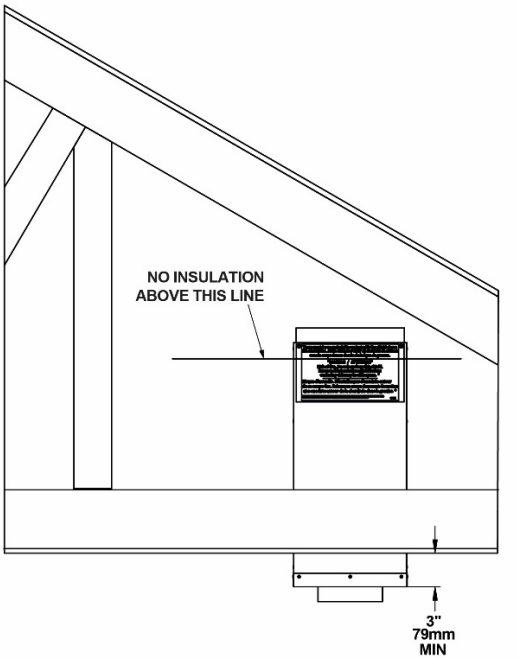

1- Insulated ceiling support installs from the top of the ceiling / attic opening, Attach ceiling bracket to the rough opening with at least (4) n° 8d nail or (4) No.8 x 1 ½ " wood screw on each side (at least 12 nails in total).

2- Next, install the flashing collar around the chimney section that protrudes beyond the opening of the ceiling support. The collar must be secured in place with 8 #8 x 1/2" self-drilling screws.

3- Make sure that the collar is properly seated on the insulated section of the ceiling support.

4- Then tighten the clamping nut to tighten the collar around the chimney.

5- Finally, make sure there is no material in contact above the engraving that delimits the area provided for the attic insulation material.

Installing an enclosure around the insulated square ceiling support is prohibited when installed in an attic.

Step 2- Assemble the Chimney:

Option 1 - When an attic radiation shield or an insulated attic radiation shield is used. Secure the first chimney section to the fireplace anchor plate with a minimum of three self-drilling screws. Attach the remaining chimney sections above while still maintaining the required 2-inch (5 cm) airspace to combustible. Use a minimum of three self-drilling screws to attach per joint. **Wall support brackets will need to be installed no more than 8 feet apart along the vertical chimney length.** The final chimney height should be determined using the specifications found on page 4 under the heading "Termination Above Roof." Be sure to enclose the chimney if it should pass through occupied areas.

Option 2 - When an insulated square ceiling support is used. Attach the first chimney section to the fireplace anchor plate with at least (3) self-tapping screws. Attach the remaining sections to the top while maintaining the required air clearance of 2 inches (5 cm) from combustible materials. Use at least (3) self-tapping screws per joint.

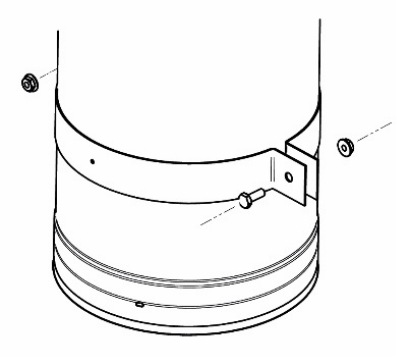

Measure the distance between the last chimney section and the insulated support to install the clamp on the chimney section in the right place. For easier installation, a telescopic chimney section can also be used**.**

Install the clamp on the chimney section and slide it inside the insulated ceiling support. The final height of the chimney must be determined using the specifications on page 5, in the paragraph entitled "Termination above the roof".

Step 3- Completing the top termination: Refer to **Step 8** on page 15 for instructions to complete the top termination. If the chimney is within a chase enclosure, refer to page 24, **Step 7**, **Option 2**.

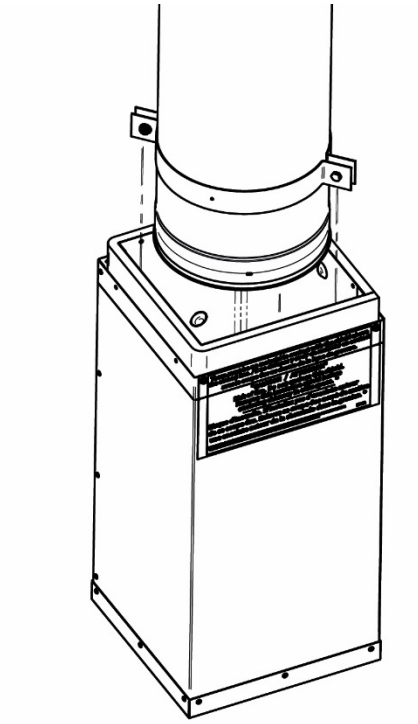

TRANSITION PLATE FOR CHIMNEY RESTORATION

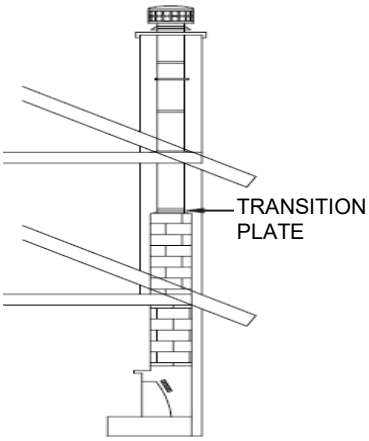

A transition plate is similar to an anchor plate, but is designed for the transition from a single wall flue liner to the 2100 insulated chimney in a chimney restoration. Seal the transition plate to the masonry chimney opening with high temperature adhesive/sealant or mortar. Further secure the transition plate in each corner with four ¼" x 2" tapcon type masonry anchors. Always maintain a 1-inch airspace clearance from the mounting plate to combustibles. Ensure the masonry chimney is a minimum of 10" above insulation and any other attic combustibles. Attach the remaining chimney sections above while still maintaining the required 2-inch airspace to combustibles. Use a minimum of three self-drilling screws to attach per joint. Refer to page 15, **Step 5** for the roof opening and page 15, **Step 8** for top termination.

MAINTENANCE INSTRUCTIONS

The chimney system must be installed and service by a qualified chimney or venting professionals. The criteria for the inspection and maintenance must be in conformance with local or state building codes, whichever has jurisdiction. It is recommended you use an inspection form and make notes that you can review with the homeowner.

WARNING FOR SOLID FUEL APPLICATIONS

"Creosote and Soot-Formation and Need for Removal: When wood is burned slowly, it produces tar and other organic vapors, which combine with expelled moisture to form creosote. The creosote vapors condense in the relatively cool chimney flue of a slow-burning fire. As a result, creosote residue accumulates on the flue lining. When ignited, this creosote makes an extremely hot fire.

The chimney should be inspected at least once every 2 months during the heating season to determine if creosote or soot buildup has occurred.

If creosote or soot has accumulated (3 mm or more), it should be removed to reduce the risk of a chimney fire."

It is recommended to clean thoroughly the chimney system after every heating season. During summer, the air is damper and with minimal air circulation within the venting system, it can mix with creosote and/or sooth deposits in pipes to form an acid that could accelerate the corrosion process and induce premature decay of the steel. Have your chimney system cleaned by a professional chimney sweep.

- Never over fire your stove or appliance.
- The high temperatures caused by over firing can damage the stove and stove pipe and may overheat nearby combustible walls.
- Keep your flue gases between 300 °F & 500 °F. This will minimize the condensation and creosote formation.
- Do not burn driftwood or treated lumber.

Recommendations for Operating a Solid Fuel-Fired Appliance

Build the fire gradually using dry kindling, then add dry, well-seasoned firewood. Maintain a steady, hot fire to promote efficient combustion and minimize creosote accumulation.
Avoid overloading the appliance or operating it with the air controls fully open for extended periods, as overfiring can damage the appliance and chimney system, reduce their service life, and increase the risk of fire.

WARNING

Do not burn driftwood, chemically treated wood, painted or stained wood, pressure-treated wood, garbage, or any other corrosive or unsuitable materials. Burning these materials may damage the chimney liner, accelerate corrosion, increase creosote accumulation, and create a fire hazard. Use only the fuel recommended by the appliance manufacturer.

MAINTENANCE PROCEDURES

It is important that the chimney system be checked and cleaned annually or as per stove manufacturer's instructions. This is for the safety of the homeowner and necessary to meet the warranty requirements of the 2100 insulated chimney. As noted above, in the case of solid fuel burning appliances, more frequent maintenance may be required, depending on use and the appliance manufacturer's instructions. The entire system, from the connection at the appliance to the top of the chimney must be completely inspected and cleaned.

To clean the chimney lining system, it is recommended to perform the following:

1) Remove cap by either removing the 4 bolts on the cap lid or by loosening the clamp band.

2) Select the proper sized chimney brush to clean the chimney. Be sure the brush head passes throughout the complete length of the liner, including the connectors, terminals and tees.

3) In some instances, proper cleaning will require removing the appliance and disassembling the connector assembly to thoroughly inspect and clean parts that cannot be reached otherwise.

4) Inspect and clean the chimney cap. Spark arrestors and other screens may be necessary or required in some areas, but may be susceptible to blockage from creosote or through freezing moisture in areas of low ambient temperature.

5) Reinstall chimney cap.

6) Before the initial firing of the appliance, check the appliance's operating instructions for initial firing precautions.

ADDITIONAL INFORMATION

1) The 2100 insulated chimney system is intended for use with heating appliances, burning home heating oil, natural or LP gas and solid fuels (pellet, wood, and coal). Use of experimental fuels is not permitted and voids the warranty.

2) Use only components listed for use with the 2100 insulated Chimney System.

3) For solid-fuels, the chimney system is not to be sized less than that specified in the appliance manufacturer's instructions.

4) The safe operation of a factory-built chimney assembly is based on the use of parts supplied by the manufacturer and the performance of the assembly may be affected if the combination of these parts is not used in actual building construction.

5) Acceptance of the assembly is void if the installation instructions are not followed.

6) The installation must be carried out in a manner that ensures all interior portions of the chimney are accessible for inspection and cleaning. It is the responsibility of the installer to provide adequate access openings or means of access in accordance with applicable codes and regulations.

PARTS LIST

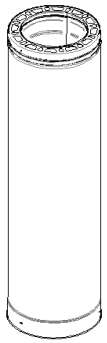

Pipe sections
(CVA304-0636)

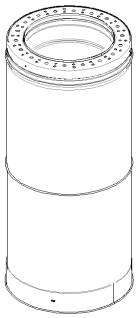

Telescoping sections
(CVA304-TEL06)

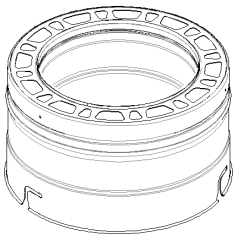

Adapters for twist lock interlocking
(CVA-TLA06)

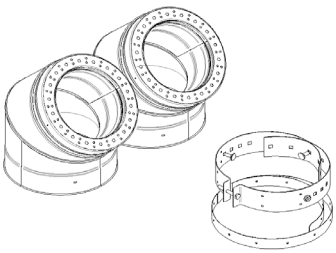

Elbows 15, 30 and 45 degrees
(CVA-EL0645)

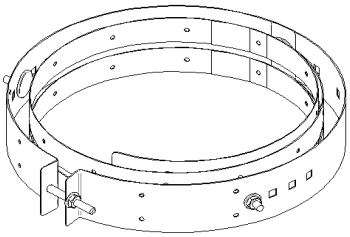

Elbow support
(CVA-ELS58)

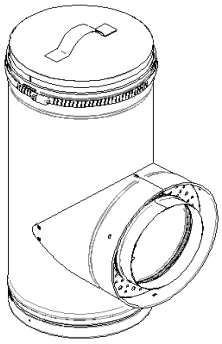

Tee with cover
(CVA304-T06)

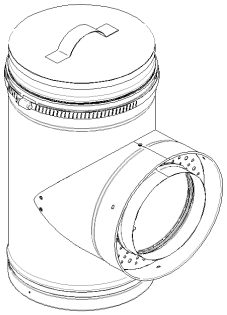

Short body tee
(CVA304-SBT06)

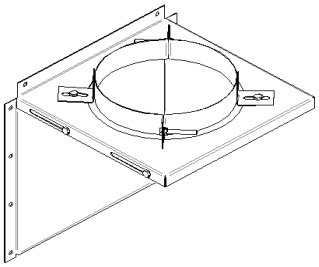

Tee support
(CVA-TS06)

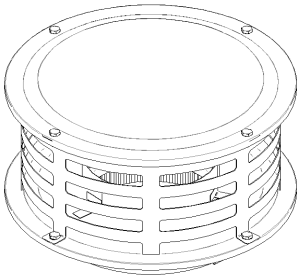

Chimney cap
(CVA-C06)

Pipe end cap
(CVA-CPEC06)

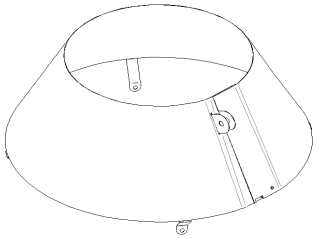

Storm collar
(CVA-SC06)

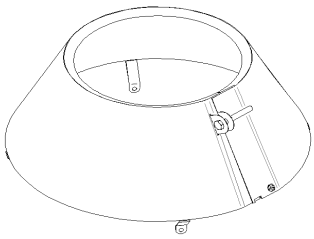

Insulated storm collar
(CVA-ISC06)

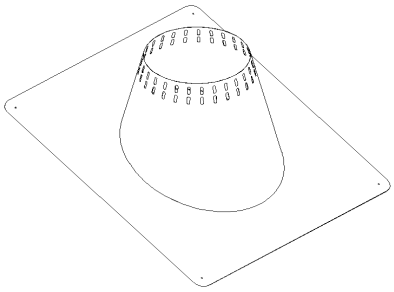

Vented roof flashing
(CVA-F0606)

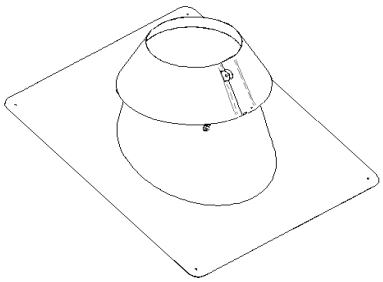

Non-vented roof flashing
(CVA-FNV0606)

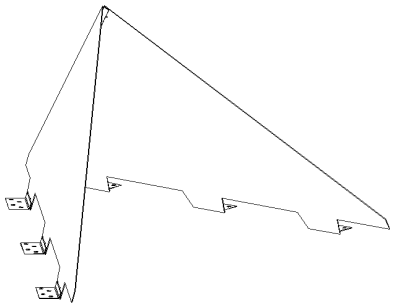

Snow wedge
(CVA-SWLG)

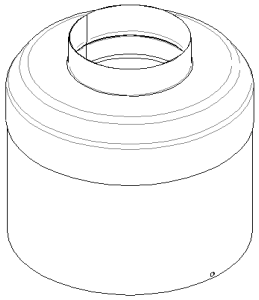

Round or square ceiling support
(CVA-CCR1106)

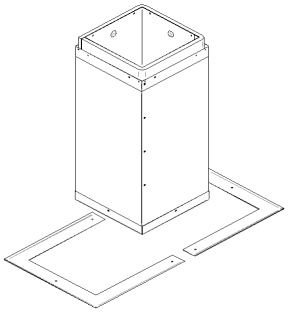

Insulated ceiling support
(CVA-ICCS2406)

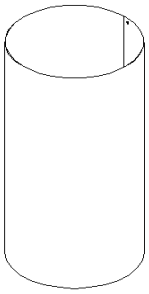

Square or round extension
(CVA-CCREXT2406)

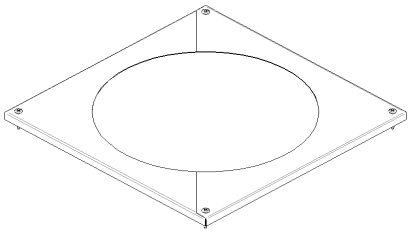

Trim plate
(CVA-CCRSQTR06)

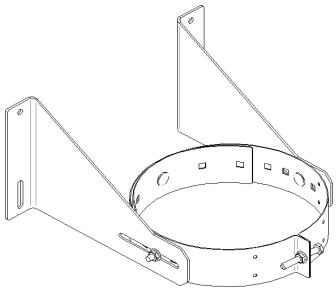

Wall support
(CVA-WS58)

Finishing cover
(CVA-FC0636)

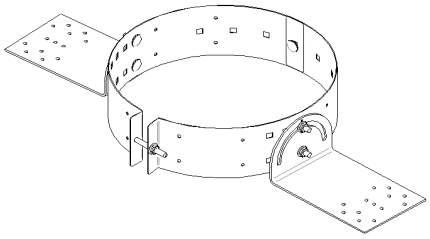

Roof support
(CVA-RS58)

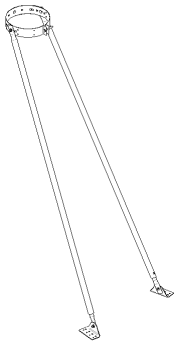

Telescoping roof braces
(CVA-RB58)

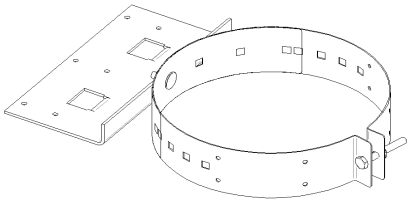

Roof line support
(CVA-RLS58)

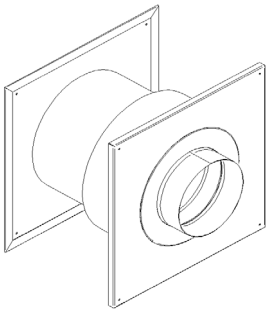

Wall pass-thru
(CVA-CWPT06)

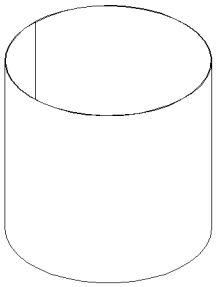

Wall pass-thru extension
(CVA-WPEXT06)

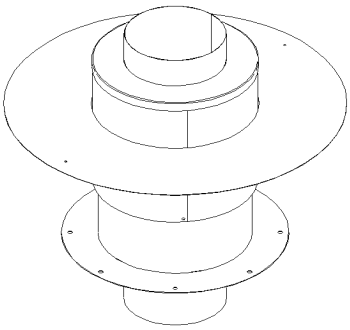

Insulated masonry thimble
(CVA-ITH06-R)

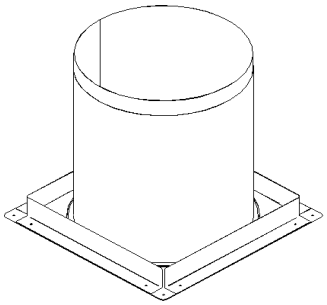

Firestop radiation shield
(CVA-FS06)

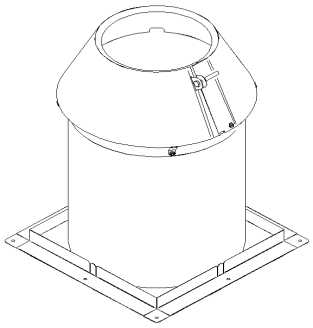

Insulated firestop radiation shield
(CVA-IARS06)

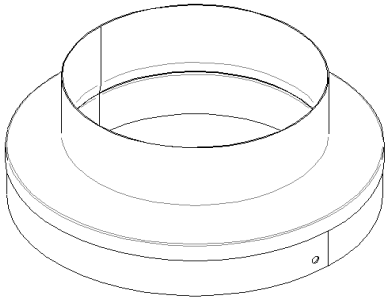

Universal adapter
(CVA-UA06)

Insulated adaptor
(CVA-UMA0630)

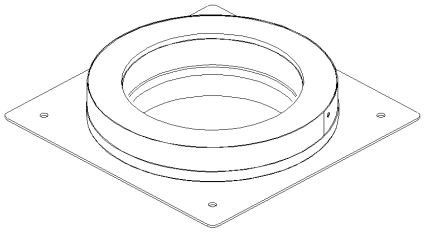

Anchor plate
(CVA-AP06)

LIMITED LIFETIME WARRANTY
2100 INSULATED CHIMNEY

The warranty:
The manufacturer's warranty applies only to the original purchaser and is not transferable. Subject to the conditions and exclusions set forth below, the manufacturer warrants that its products will be free from manufacturing if properly installed. This warranty only covers replacement of defective chimney components in a residential installation and includes replacement of damaged components due to a chimney fire. The manufacturer will require proof of annual inspection and cleaning reports. This warranty is void if the chimney is used in a different application than what it is designed for. This warranty is the sole and exclusive remedy, offered in lieu of all other warranties, expressed or implied.

Warranty conditions:
The warranty of the chimney system and its components are subject to the following conditions:

Brand new products with proof of purchase only;

1) Products must have been purchased from an authorized *SBI Venting Division* dealer;
2) Installation in accordance with the instructions supplied with this product and all local and national building codes;
3) Normal use with a residential heating appliance that has been certified by an accredited laboratory (pellet, wood, coal, oil or gas). Read the installation instructions for more details.
4) The chimney is designed to operate at a maximum continuous temperature of 650 degrees Celsius (1,200 degrees Fahrenheit) or less;
5) The chimney system must be cleaned and inspected on an annual basis by a chimney professional at intervals of no more than 12 months each, starting at the date of purchase and as long as the warranty period applies. Receipts verifying that maintenance was performed must be kept;
6) Products under this warranty must have been produced after the date indicated on the cover page of this document;
7) The chimney must have a cap installed;
8) Parts or components from other manufacturers are not covered by this warranty.

Warranty application in the case of a replacement:

	0 to 10 years[1]	**11 to 15 years[1]**	**16 years and more[1]**
Chimney	100%	75%	50%
Supports, cap and brackets*	100%	100%	50%
Labor	300$[2]	N/A	N/A

* Covers perforation only.

[1] From date of purchase.

[2] Maximum compensation upon evidence of the original installation and replacement done by a professional. Claim is subject to approval by the manufacturer.

This warranty covers the transportation costs for replacement parts. These will be delivered FOB Saint-Augustin-de-Desmaures (Quebec) to your nearest SBI Venting Division retailer.

The parts covered by lifetime warranty are subject to a limit of one replacement on the useful life of the product.

The manufacturer may, at its discretion, fully discharge all obligations with respect to this warranty by refunding the suggested retail price determined the manufacturer of any warranted but defective parts or supply any replacement parts under warranty without any charge.

Warranty exclusions:

This warranty does not cover:

1) Labour (unless specified by the manufacturer) and installation costs;
2) Products that have been altered, modified or repaired since shipment from factory;
3) Products that have been moved from their original installation site;
4) Any non-stainless components mounted or connected to the chimney or venting system;
5) Damage (to products, appliances or structure) caused by misuse, abuse, improper installation, lack of maintenance, improper inspection or any other negligence;
6) This warranty does not cover incidental or collateral damages caused by smoke, fire, flood, strong winds, “acts of God”, or any other contingency beyond the manufacturer’s control;
7) Use of improper chimney cleaners or any improper solvents/chemicals will void all applicable warranties;
8) Does not cover any solid fuel other than pellets, wood or coal with low sulfur content;
9) Damage resulting from the use of driftwood, pressure-treated lumber, wood containing salt, chemicals, or any prohibited material will void all applicable warranties.

Claim process:

Shall your unit or any component be defective, contact immediately your *SBI Venting Division* dealer. Prior to your call, make sure that you have the following information necessary for your warranty claim treatment:

- Your name, address and telephone number;
- Model name as indicated on the certification label or instruction sheets;
- Original invoice and dealer’s name;
- Nature of the defect and any relevant information.

Before shipping your unit or defective component to the manufacturer, you must first obtain a return authorization number. Supporting documents or digital pictures may be required to support the claim. Any merchandise shipped to the manufacturer without authorization will be refused automatically and returned to the sender.

SBI
VENTING DIVISION

250 De Copenhague Street
Saint-Augustin-de-Desmaures
(Québec), Canada, G3A 2H3
418-870-1305